NRL Report 6544

Use of NTDS as a Satellite Display

J. R. Boller

Applied Physics Branch
Applications Research Division

June 7, 1967

NAVAL RESEARCH LABORATORY
Washington, D.C.

DISTRIBUTION OF THIS DOCUMENT IS UNLIMITED

CONTENTS

Abstract	ii
Problem Status	ii
Authorization	ii
INTRODUCTION	1
DESCRIPTION OF SPAD	1
GROUND RULES FOR NTDS-SPAD	3
INCORPORATING SPAD INTO NTDS	4
Time Inputs	4
Category Selection	6
Satellite Selection	8
Cancel	8
Symbol Select	8
Close Control and Track Ball	8
Map Scale	9
Off-Center	9
Orbit	9
Own Ship Data	10
Area of View and Velocity Vector	10
Map Grid Lines and Symbols	10
Alert Readouts	11
Readout Console	11
Tabular Readout	13
Computer Program	13
IMPLEMENTING THE NTDS-SPAD CONCEPT	13
Design Steps	13
Operator Action	14
CONCLUSIONS	14
ACKNOWLEDGMENTS	14
REFERENCES	15
APPENDIX - List of Abbreviations	16

ABSTRACT

With the completion of the NRL evaluation of the experimental model of the Satellite position Prediction and Display equipment (SPAD), efforts have been directed toward the consideration of an operational version of SPAD. One possible equipment configuration, which would lead to a substantial savings in cost and development time, incorporates the SPAD functions into the Naval Tactical Data System (NTDS). By time sharing the NTDS computer through suitable programming, one of the display consoles in an NTDS facility could be used to present a SPAD display without interrupting service to the other NTDS displays. This proposal is based on the premise that no hardware modifications or additions are to be made to the NTDS equipment except for changing certain labels. Also the time required for switching a display console between NTDS and SPAD should be kept to a minimum. It appears that all of the original SPAD features can be incorporated into the NTDS equipment without any conflict with these ground rules. The NTDS-SPAD concept will give an NTDS-equipped ship a satellite display capability at minimal additional cost.

PROBLEM STATUS

This is an interim report; work on the problem is continuing.

AUTHORIZATION

NRL Problem Y01-01
Project SF 019-01-03, Task 6168

Manuscript submitted February 2, 1967.

USE OF NTDS AS A SATELLITE DISPLAY

INTRODUCTION

The prototype version of the Satellite position Prediction And Display equipment (SPAD) has been constructed and evaluated at the Naval Research Laboratory (1). Since then consideration has been devoted to the design of an operational version of SPAD. Several alternative systems have been conceived which would present a display that would appear the same as is presented in the first-generation SPAD but would be generated in a different manner and use different equipment. One method, which would have considerable advantages, is to incorporate the SPAD functions into the Naval Tactical Data System (NTDS). This is made feasible by eliminating the need for a raster as discussed in Ref. 2. By using an NTDS display and computer on a time-shared basis, no new hardware would have to be added to provide a SPAD display on a ship that has an NTDS installation. The NTDS display console would be utilized in such a way that either NTDS or SPAD data could be selected for viewing by simply changing a switch position and certain labels.

After giving a brief description of the functions of the original SPAD equipment, this report describes in some detail how these functions could be provided by the NTDS equipment. Also described are the required changes of certain SPAD functions so that they can be incorporated into the NTDS equipment.

DESCRIPTION OF SPAD

SPAD uses a digital computer to store the orbital elements of a number of satellites and to compute positions of selected satellites from these elements (3). The original SPAD equipment uses an AN/UYK-1 computer containing a magnetic core memory of 8192 words of 15 bits each. This provides for the storage of orbital elements for up to 88 satellites while leaving adequate space for the storage of the SPAD program.

A 19-inch cathode-ray tube (crt) is used for displaying the predicted satellite positions along with an orbit, vector, area of view, and own-ship position against a map-grid outline. Adjacent to the position dot of each satellite is a symbol group depicting category, track number, and height in tens of miles of that satellite. The track number is related to a computer memory address and is not the same as the SPADATS number which is permanently assigned to a satellite by the Space Detection and Tracking System (SPADATS).

Satellite positions may be viewed against a world map background (Fig. 1), or a particular satellite may be selected for viewing on a 20 by 30 degree rectangular expanded display (Fig. 2). However, when the satellite is within 15 degrees of either pole, then the polar expansion is automatically selected (Fig. 3). The expanded display may also be centered about the own ship. As many as 11 satellites plus own ship can be viewed at one time on the world map display. Ten of these are selected by category, and the eleventh satellite is individually selected by means of its track number.

SPAD can display satellite positions in either real time or manual time. The manual time can be adjusted by the operator to some future or past moment. By proper manipulation of the controls, manual time can also be accelerated either forward or backward at varying rates.

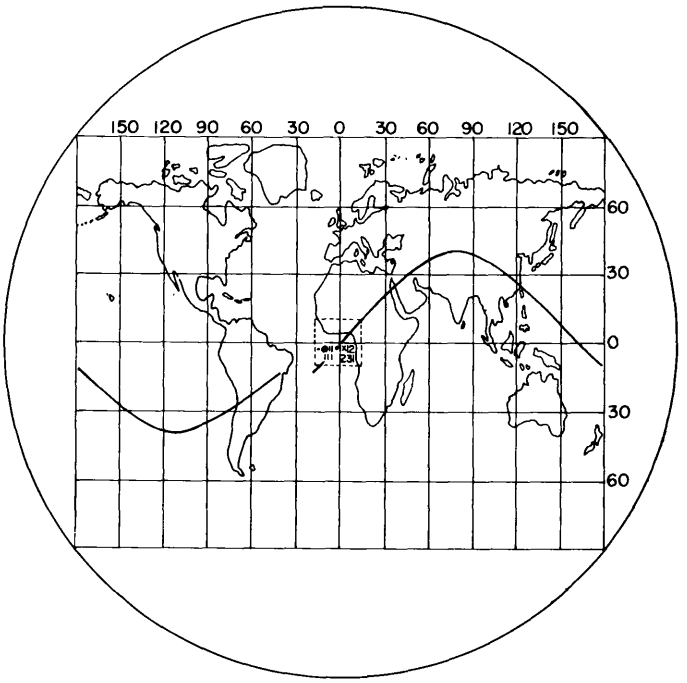

Fig. 1 - Appearance of world map display

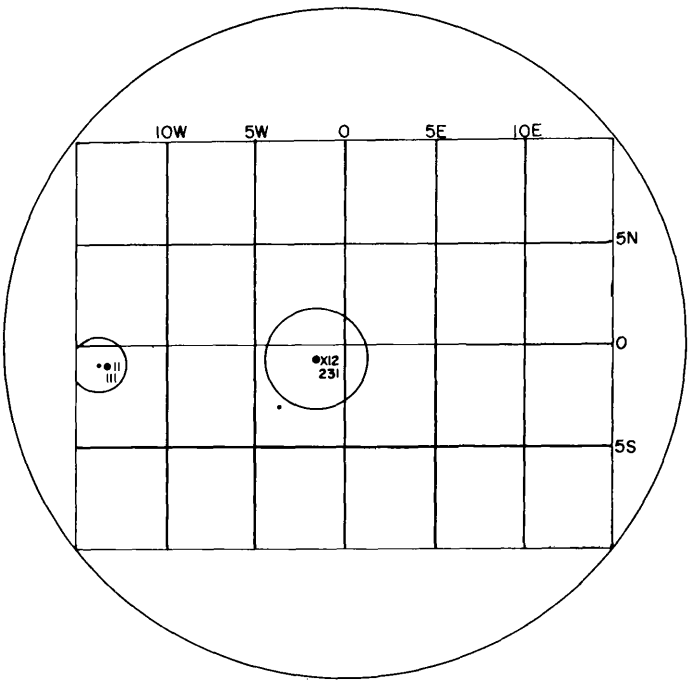

Fig. 2 - Appearance of rectangular expanded display

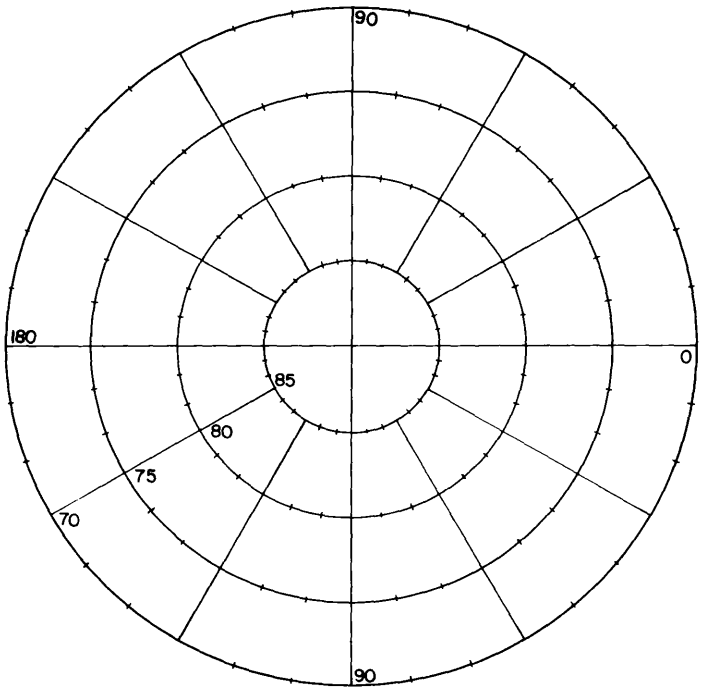

Fig. 3 - Appearance of polar expanded display

In the original SPAD equipment a teletypewriter is used to provide a hard copy of detailed information describing a selected satellite. These items are printed out in a two-line message: SPADATS number, category, time, position, height, area of view, antenna azimuth and elevation angles, and track number. The teletype data appear as:

SPDT	CATEGORY	MO	DA	HR	MN	SC	LATIT	LONGIT	HEIGHT	VIEW	AZ	EL	TN
0564	USA SCIE	12	20	16	30	05	32.5N	158.3W	12,355	1503	255	47	10

GROUND RULES FOR NTDS-SPAD

Since the operational requirements for SPAD have never been formally specified, it is necessary in this report to assume certain basic ground rules. These assumptions are necessary in generating a proposal for incorporating SPAD into NTDS.

The first ground rule is that no additional equipment should have to be added to the NTDS installation to provide the SPAD functions. Pending a formal evaluation of the NTDS-SPAD concept, the only hardware change that should be allowed is the change of labels on the consoles used for SPAD. This leads to compromises in operator convenience. The time required to switch a console between the NTDS and the SPAD displays should be kept at a minimum, say a minute or less. The major portion of the SPAD concept would be in software form consisting of the computer program.

In light of the successful performance of the first version of SPAD, as many as possible of its features, which are described in Ref. 1, should be included in the NTDS version. However, it is felt that no SPAD feature should be included which would necessitate a deviation from the first ground rule stated above.

The proposal that is presented here is based on the NTDS SYA-4 display group. This proposal can also be applied to the newer UYA-4 display group, since the UYA-4 includes all of the features of the SYA-4 that would be used by SPAD. The main differences would be in the panel layouts on the display console and the incorporation of the readout console into the display console. These differences, however, would not alter the use of any of the functions of the console.

INCORPORATING SPAD INTO NTDS

Time Inputs

Satellite positions are computed for either real time or manual time as selected by the operator. The real time is simply the local 24-hour time consisting of year, month, day, hour, minute, and second. Manual time is variable and is used to predict satellite positions in the future or past as well as the present time, from 1960 through 1975. Whereas the initial date is selected for convenience, the time interval is determined by computer word size and a one-second time increment.

The real-time clock presently used in the NTDS computer could be used indirectly as a source of real time for SPAD. The NTDS time word is a 30-bit binary number incremented at a 1.024 kHz rate. Although this number could cover a span of over 12 days, it probably is constrained to cycle each week. Until more is known of how the time word is used, it is recommended that only the 1-cps bit be extracted for SPAD use.

The SPAD program could then be written so that a special location in the memory is used to store the year, month, day, hour, minute, and second. The 1-cps bit could be used to advance real time for SPAD, after the initial value is set in from the display console each time the NTDS equipment is switched to provide the SPAD function.

The manual time is more involved, because it must be advanced at various rates, both forward and backward, and then held at an arbitrary value as requested by the operator. The manual-time word is similar to the real-time word in that it consists of year, month, day, hour, minute, and second. The original SPAD equipment provided a time vernier for obtaining continuous control of the rate of change of manual time. Since there is no suitable control of this type on the NTDS display console, another method, which will require only pushbutton switches, must be used for controlling the manual time. The five pushbuttons shown in Fig. 4 could provide this function. These five switches can select two predetermined rates for varying time both forward and backward as well as permit stopping time. The actual values for these two predetermined rates are readily changed, since they are simply written into the computer program and thus do not depend on the hardware. As either an alternative to or an addition to this method, the value of the rate of change of manual time could be entered by the operator by means of the number entry dials (Fig. 5). Although this would remove the restriction to two predetermined values, this manual entry method would require more actions to be taken by the operator to vary manual time.

FAST BACK.	SLOW BACK.	STOP	SLOW FOR.	FAST FOR.

Fig. 4 - Pushbuttons for controlling manual time

Figure 5 shows the layout of an NTDS display console with the controls labeled for the SPAD functions. This is just one of the many ways that the controls could be utilized for SPAD operation. The five pushbuttons for controlling manual time are located on the entry panel. Also in this row of switches is a pushbutton labeled TIME SEL.* which

*See Appendix for a list of abbreviations used in this report.

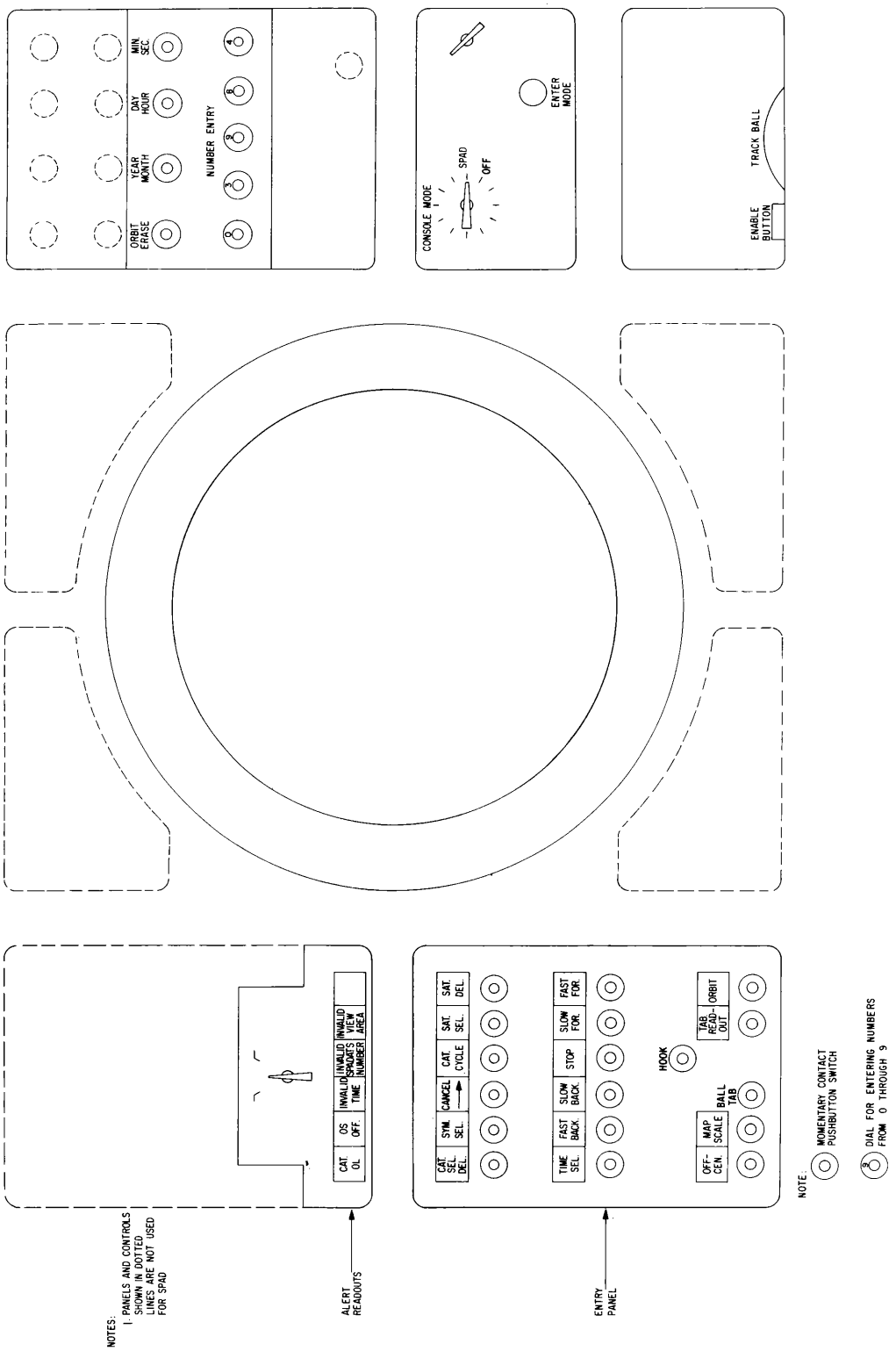

Fig. 5 - Display console for SPAD operation

selects either manual or real time for the satellite predictions. Repeated operation of this button causes the selection of manual time and real time in an alternate sequence. Thus, depressing the TIME SEL. button always switches the satellite predictions to the other source of time.

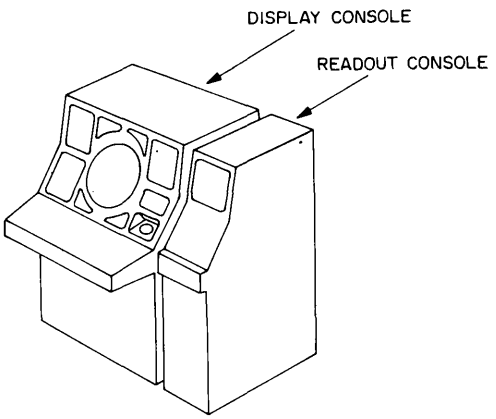

Fig. 6 - Sketch of a display console and a readout console

The current prediction time would be viewed on the readout console, shown in Fig. 6, with one indicator on this console showing whether real time or manual time has been selected.

As mentioned earlier, a means must be provided for entering into the computer the initial values of both real time and manual time. This can be done at the number entry panel of the display console (Fig. 5) using four of the five number entry dials in each of three successive operations to enter 12 decimal digits denoting year, month, day, hour, minute, and second. The fifth or left-hand dial can be left at zero.

Suppose that the initial real time value to be entered is 14 seconds past 1832 hours on January 29, 1967. First, real time prediction is selected by appropriately pushing the TIME SEL. button on the entry panel. Then the five number entry dials are set to 06701, and the YEAR/MONTH button is pushed to enter year and month into the computer. For the second operation the dials are set to 02918, and the DAY/HOUR button is pushed. Finally, the dials are set to 03214, and (at the proper moment) the MIN./SEC. button is pushed. The computer must, of course, be programmed to properly interpret these three successive input words as representing one value of time. Thereafter, the computer automatically updates real time once each second, regardless of whether predictions are being computed in real or manual time.

Category Selection

On the original SPAD equipment the selection of the categories of satellites to be displayed is made by means of a 3 by 5 matrix of pushbutton switches, as shown in Fig. 7, plus a separate pushbutton for the unknown category. Also shown in matrix form are the category symbols which are generated on the crt for identifying the category of the satellites being displayed.

Since the NTDS display console does not have such a matrix of switches, some other means must be provided for selecting the categories. One possible method for implementing this on the NTDS console would be to assign to each category a code number and send this number to the computer by means of the number entry dials. Although the code would be completely arbitrary, it could be advantageous to retain the matrix format by adopting the code shown in Fig. 8.

This system of coding should be relatively easy for the operator to learn. In this scheme the first digit corresponds to the country of origin, and the second digit indicates the function of the satellite. It should be pointed out that the labeling of these categories was somewhat arbitrary and can be easily changed to suit the particular requirement.

So that the computer will know whether the specified category is to be deleted or selected, another digit is prefixed to the two-digit category code to make this distinction.

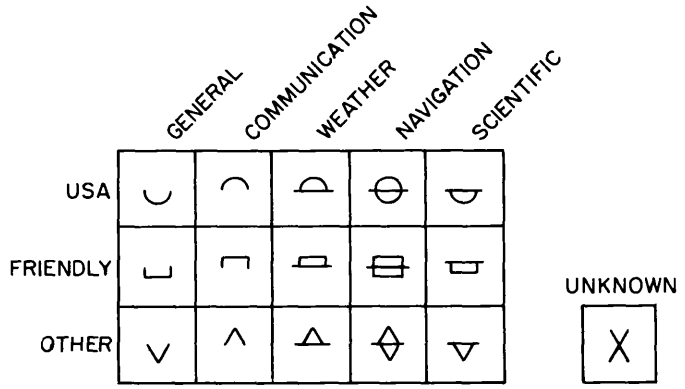

Fig. 7 - Category selection pushbuttons of original SPAD equipment

A 1 indicates a selection and a 0 indicates a deletion. Thus, to select the USA weather satellites, the operator would enter the decimal code 113 into the number entry dials, and then press the CAT. SEL./DEL. button (located on the entry panel) to send this request to the computer. To delete this category, the code 013 is set into the number entry dials followed by an operation of the CAT. SEL./DEL. pushbutton.

To delete all categories at once, a special code such as 066 would be entered into the number entry dials and then sent to the computer by pressing the CAT. SEL./DEL. pushbutton. This would remove from the display all satellites which had been previously selected by category.

If the operator selected more than ten satellites by category, only the first ten would be displayed initially. (This limitation of ten was imposed on the first version of SPAD because it was felt that more satellites would needlessly clutter the display.) After the operator observed the first ten satellites, he would push the CAT. CYCLE pushbutton to display the next ten satellites that were selected by category. This process would be repeated as often as necessary until all requested satellites had been displayed as indicated by a category overload lamp which will be discussed later. This limit of ten category-selected satellites is based on the assumption that a maximum of 11 satellites should be

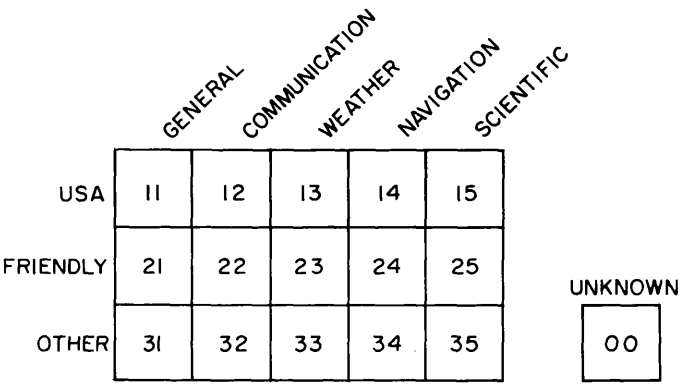

Fig. 8 - Category selection code for NTDS-SPAD

displayed at once, as in the first version of SPAD. Since one satellite is always under close control and therefore not affected by category selections, only ten of the 11 can be used for displaying category-selected satellites. This close control concept does not mean control of a satellites' position; it refers only to how the satellite is displayed.

Satellite Selection

In addition to selecting satellites by category provision should be included for selecting satellites individually. In the original version of SPAD, satellites are individually selected by a two-digit track number which corresponds to a memory location storing the orbital elements for that particular satellite. However, it is recommended that in the future the SPADATS number be used in place of the SPAD track number. It is expected that the operator would find the SPADATS number to be easier to use and more meaningful than the SPAD track number, which might be assigned to different satellites from week to week.

The procedure for selecting satellites individually would be to first enter the satellites' four digit SPADATS number into the number entry dials and then push the SAT. SEL. pushbutton located on the entry panel. The satellite would then be displayed. If there were already eleven satellites being displayed when the new satellite was selected, one of the displayed satellites would have to be deleted before the new satellite could be displayed. Individual satellites would be deleted by entering their respective SPADATS numbers into the number entry dials and pushing the SAT. DEL. pushbutton on the entry panel.

Cancel

The CANCEL pushbutton (Fig. 5) cancels all operations of the CAT. CYCLE, SAT. SEL., and SAT. DEL. pushbuttons made subsequent to the last use of the CAT. SEL./DEL. pushbutton. This leaves on the display only the satellites originally selected by category and the satellite that is under close control. Thus the operator can display the satellites of his original category selections without making new requests for each category.

Symbol Select

To reduce to a minimum the number of symbols that must be generated on a SPAD display, the operator must select what symbols are to be painted next to each satellite position. The satellites' category symbols would always be displayed at the actual positions. Then the operator would select either the SPADATS numbers or the heights to be painted along with the category symbols. This would be accomplished by using the SYM. SEL. pushbutton. Repeated operation of this button would select SPADATS numbers and heights in an alternate sequence. The operator would know which had been selected by observing the display. The SPADATS numbers would contain four digits while the heights would contain three digits (height expressed in tens of miles).

Close Control and Track Ball

The satellite under close control corresponds to the track number satellite in the first version of SPAD. This is the satellite which can have its orbit or area of view displayed and its position printed out on the teletypewriter. A satellite would be placed under close control by means of the track ball in the same manner as a conventional target on regular NTDS display consoles. The operator would initiate the sequence of events by pushing the BALL TAB pushbutton on the entry panel to cause the ball tab symbol to

appear at display center. He would then position this symbol over the selected satellite's position with the track ball. When the ball tab symbol is directly over the satellite, the HOOK pushbutton is pressed to "hook" the satellite and place it under close control. The hook symbol (a circle) then replaces the ball tab symbol and encloses the satellite category symbol so that the satellite under close control can always be easily identified. When this satellite is put under close control, there is automatic cancellation of close control of any previous satellite. Thus, one and only one satellite would always be under close control at any time. This also implies that the close control of a satellite cannot be removed until another satellite is selected and "hooked" for close control.

Detailed information on the satellite under close control appears on the data readout console without further action by the operator. As will be described, further steps are necessary for viewing orbit, velocity vector, area of view circle, and an expanded display.

Map Scale

The MAP SCALE pushbutton allows the operator to switch the display between the world map mode and the expanded mode. Repeated operation of this button alternately selects the two modes of operation. In the expanded mode the operator may select the expansion to be about either the satellite under close control or the own ship. When the satellite (or own ship) is more than 15 degrees from either pole, the rectangular expansion is displayed as shown in Fig. 2. The computer alters the off-centering in discrete jumps so that the satellite (or own ship) will never be less than 5 degrees from the display border. When the satellite (or own ship) comes within 15 degrees of either pole, the computer selects the polar expanded display as shown in Fig. 3.

Only the satellite under close control and the own ship would ever be displayed on either of the expanded displays. This means that all of the other satellites that were selected for the world map display would not be shown on the expanded display even if their positions were within the expanded area. If the positions of both the own ship and the satellite under close control happen to be in the same expanded area, they will both be displayed. At other times, only the target that was selected for off-centering will appear on the expanded display.

Off Center

The OFF-CEN. pushbutton selects the expansion to occur about either the satellite under close control or the own ship. Repeated operation of this button alternately selects the satellite and own ship.

Orbit

The ORBIT pushbutton would permit the operator to request an orbit for the satellite under close control. This orbit appears only on the world map display. When the computer receives this request, it must compute 128 orbit points, starting one half of a period prior to the satellite's present position and extending for one half of a period ahead of the satellite. These orbit computations are made only once for each push of the ORBIT button. Thus, the operator must push the ORBIT button every time he wants an updated orbit. The number of orbit points to be computed is quite arbitrary; 128 was picked for simplicity, and because it provided a fairly pleasing orbit in the first version of SPAD. In the original SPAD a vector generator was not available, so the orbit consisted only of the 128 orbit dots. However, it is recommended that the orbit points be joined with lines, utilizing the line drawing capability of the NTDS equipment. This may then allow a reduction in the number of orbit points to possibly 64, thus reducing by one-half the time required to compute and display an orbit.

The function of the ORBIT ERASE pushbutton, located above the number entry dials, is to remove the existing orbit from both the display and the computer's memory when the orbit is no longer needed.

Own Ship Data

The NTDS computer continually receives updated own-ship data denoting position, speed, course, heading, pitch, and roll. Since this information is already stored in the computer, the SPAD computer program would have only to assemble this data into a format for reading out to the SPAD display. Therefore, in addition to displaying the own ship symbol, the course and/or speed can also be displayed as numbers adjacent to the category symbol, as was done in the first version of SPAD. The own-ship data that is to be painted can be readily changed to suit the particular situation, since it is simply a matter of programming. Any other own-ship data that is available to the computer can be displayed next to the own-ship position.

Area of View and Velocity Vector

The area-of-view circle would be displayed for the satellite under close control on the expanded displays. The actual significance of this circle would have to depend on the type of satellite. For instance, if it is a communications satellite, this circle could show the line-of-sight range of communication that would be possible. Whatever significance this circle might assume, it will involve only the programming of the computer and will have no effect on the hardware.

On the rectangular expanded display the area of view cannot be shown as a true circle because of the convergence of the meridians. Thus, the area would have to be approximated by a polygon of, say, 20 sides. The computer would have to compute the positions of the points of the polygon, taking into account all of the variables involved. The NTDS vector generator would then draw 20 lines joining these points. For the polar expanded display the area of view could probably be displayed as a true circle, since the error would be relatively small. However, in practice, the 20-sided polygon would be used for the polar as well as for the rectangular expanded display.

The velocity vector of the satellite under close control would also be painted on the expanded displays. This is generated by computing the satellite's position one minute earlier and then drawing a line between this point and the present position of the satellite. Since the satellite is never closer than 5 degrees of the border on the expanded displays, the entire vector should normally be visible on the display.

Map Grid Lines and Symbols

The map grid lines for the world map, rectangular expanded, and polar expanded displays (Figs. 1, 2, and 3) are generated from fixed position data stored in the NTDS computer. The computer must read out the proper map grid data once each display frame interval in the same manner as the satellite data. From this data the NTDS line generator then generates the required deflection voltages for displaying the map grid lines. The geographical outline shown on the world map display in Fig. 1 is not displayed on the crt phosphor. It would be produced by an edge-lit optical overlay which would be turned on only when the display is in the world map mode. Unless suitable circles can be obtained from the NTDS equipment, the polar map grid circles must be generated by painting a series of straight line segments to approximate the circles.

The map grid symbols identifying the parallels and meridians are also read out by the computer. For the world map and polar displays these symbols are fixed. However, for the rectangular expanded display these symbols must change to correspond to the proper expanded area. Since the NTDS symbol generator does not have the full alphanumeric capability, the letters W, E, N, and S on the rectangular expanded map in Fig. 2 will not be displayed. The location of the expanded area will still be easily identified by noting the direction of increase in numerical value of the map grid symbols.

Alert Readouts

The alert readout lamps, located directly above the entry panel, are used for indicating invalid conditions and for presenting the status of the display. These readouts are computer controlled.

The CAT. OL (Category Overload) lamp indicates that some of the satellites that were selected by category are not being displayed. When all of the satellites have been displayed as a result of successive operations of the CAT. CYCLE pushbutton, the Category Overload lamp is turned off.

The OS OFF. (Own ship off-center) lamp is turned on when the expanded display is off-centered about own ship. When the lamp is off and the display is in the expanded mode, the display is off-centered about the satellite under close control.

The INVALID TIME lamp indicates that the computer has received an invalid time, such as 25 hours or 35 days. The lamp is not turned off until a valid time has been sent to the computer.

The INVALID SPADATS NUMBER lamp is turned on when the computer receives a SPADATS number from the display console for a satellite which is not stored in the computer. The lamp remains lit and the computer ignores the request until the operator sends a valid SPADATS number.

The INVALID VIEW AREA lamp indicates when the satellite view area is too large to be seen on the expanded display. When this lamp is on, the operator will know that the view area covers at least all of the expanded area being displayed.

Readout Console

A Data Utilization Readout Console would be used to continuously present additional information to the SPAD operator. The readout console, shown in Fig. 6, contains a 6 by 6 matrix of readout cells, each of which can display any one of 12 predetermined messages by means of 12 internal lamps. These messages may consist of letters, numerals, or groups of words.

Figure 9 shows how this readout could be used for presenting SPAD data. This arrangement provides for reading out the prediction time, latitude, longitude, height, category, and SPADATS number, and for indicating whether SPAD is operating in real time or manual time. All of the required SPAD messages for each of the readout cells of the readout console are shown in Fig. 10. By using this readout format, only eight of the readout cells (marked with * in Fig. 10) on the NTDS console must be changed to display the SPAD data. When the readout console is to be used for SPAD, these eight readout cells would be replaced by the SPAD readouts. Since each readout cell is a plug-in module, it is anticipated that this replacement would be simply effected. However, there would be a problem of storing the readouts when they are not being used, but this is a detail that can be solved with little difficulty.

	USA	GENERAL	1	2	3	4
		LAT. NORTH	3	2	5	
	MAN. TIME	LONG. WEST	1	5	8	3
	1	2	3	5	5	MILES HEIGHT
YEAR MONTH DAY →	6	5	1	2	3	0
HOUR MINUTE SECOND →	2	3	5	9	5	9

Fig. 9 - Readout console display format

USA FRIEND OTHER *	GENERAL COMMUNICATION WEATHER NAVIGATION SCIENTIFIC *	0 1 2 3 4 5 6 7 8 9	0 1 2 3 4 5 6 7 8 9	0 1 2 3 4 5 6 7 8 9	0 1 2 3 4 5 6 7 8 9
	LAT. NORTH LAT. SOUTH	0 1 • • • 8 9	0 1 • • • 8 9	0 1 • • • 8 9	
MAN. TIME REAL TIME *	LONG. EAST LONG. WEST *	0 1 * *	0 1 • • • 8 9	0 1 • • • 8 9	0 1 • • • 8 9
0 1 • • • 8 9	0 1 • • • 8 9	0 1 • • • 8 9	0 1 • • • 8 9 *	0 1 • • • 8 9	MILES HEIGHT *
0 1 • • • 8 9	0 1 • • • 8 9	0 1 • • • 8 9	0 1 • • • 8 9 *	0 1 • • • 8 9	0 1 • • • 8 9
0 1 2	0 1 • • • 8 9	0 1 • • • 8 9	0 1 • • • 8 9	0 1 • • • 8 9	0 1 • • • 8 9

* INDICATES THAT THE READOUT CELL HAS BEEN REPLACED TO PROVIDE SPAD MESSAGE

Fig. 10 - Modified readout console messages available for SPAD

Tabular Readout

The TAB. READOUT pushbutton permits the operator to request a printout of the data displayed on the readout console at any particular time. For convenience the printout device might be a teletypewriter at some remote location, say the ship's bridge. Additional information that would be relevant to the particular satellite could also be printed out on the teletypewriter, provided that the information is available to the computer.

Computer Program

The services which the computer must provide have been specified in the previous descriptions of the SPAD functions. The SPAD program would be put in a program module which would be loaded into the computer only when SPAD was in operation. Depending on available memory space, one or two of the NTDS program modules would possibly have to be removed to make room for the SPAD program module. The SPAD program would probably use those parts of the NTDS program remaining in the computer which handle the interrogation and output to the displays, thus reducing the size of the SPAD program.

The satellite data must also be loaded into the computer's memory. Although this data could probably be used directly from a magnetic tape, the data could be retrieved much faster if it was stored in the computer's magnetic core memory. New satellite data would probably be sent to the ship over radio teletype links and then punched out on paper tape or recorded on magnetic tape. This would probably be done about once a week to insure up-to-date data.

IMPLEMENTING THE NTDS-SPAD CONCEPT

Those steps involved in presenting a satellite display such as SPAD on NTDS equipment are now listed and discussed. It will be noted that some steps must be done once, as part of the design procedure. Other steps are followed by the operator as he switches the NTDS display console between the SPAD and the conventional NTDS functions.

Design Steps

A computer program must be written for the NTDS computer (AN/USQ-20 and later versions) to include the performance features found in the original SPAD equipment as described in Refs. 1, 3, and 4. This program is to be written in the so-called "modular" form such that it can be inserted and deleted without inhibiting the response of the computer to other such modules while the computer performs several tasks on a time-shared basis.

Satellite data must be assembled in the proper format as described in Ref. 3. These are the data which are to be updated at intervals of perhaps once a week.

Certain new labels must be prepared so that the display console will appear as shown in Fig. 5. For the entry panel and alert readouts these labels might be special projection film frames to be placed in the readout assemblies. Alternatively, entire readout assemblies might be prepared to replace those not suitable for SPAD use. Remaining SPAD labels on the display console would be engraved on a mask which should either cover or replace the existing NTDS labels.

Certain readout cells on the readout console shown in Fig. 6 (to the right) will have to be altered to provide the messages shown in Fig. 10. Eight SPAD labels must be prepared for the readout cells marked with an asterisk.

Should map background information be desired for the display console, an edge-lit optical overlay could be engraved with continental outlines and major islands. This overlay would be mounted on the display console, with the edge-lighting under control of the operator.

Operator Action

A minute or so should suffice for the reversible steps which permit an NTDS display console to become a satellite display console. For instance, since provisions already exist for displacing selected computer program modules, it should be no problem to insert the SPAD module together with a current set of satellite data.

The operator should place the CONSOLE MODE switch in the SPAD position and then push the ENTER MODE pushbutton.

SPAD labels must then be added to the display console and the readout console as described above.

The operator must then send the computer an initial value of prediction time and also select a satellite for close control, as has been previously described.

CONCLUSIONS

It is apparent that all of the SPAD functions could be provided by the NTDS equipment. This report has shown how the NTDS console could be used for presenting a SPAD display. In some cases better human engineering principles could have been used if the display console was being designed specifically for SPAD. However, in this proposal, the basic ground rule was that no alterations or additions would be made on the NTDS hardware except for the labels. It was felt that this elimination of specialized equipment was one of the main advantages of the NTDS-SPAD concept.

Provided that adequate computer time could be spared, an NTDS equipped ship could have a SPAD display by only adding the appropriate computer program and changing certain labels on one display console. This keeps the shipboard electronics at a minimum, which reduces the size, weight, power, maintenance, and logistic requirements. If a specific operational requirement develops for a shipboard satellite display, it is recommended that an evaluation be made of the NTDS-SPAD proposal.

Pending a more detailed study, which is possible only through programming the NTDS computer to provide the SPAD functions, it is tentatively concluded that a reasonably satisfactory SPAD display is possible without seriously altering the NTDS display console. Thus, on a time-shared basis a satellite position prediction and display facility can be provided on an NTDS-equipped ship through proper programming of the NTDS computer.

ACKNOWLEDGMENTS

The author wishes to express his appreciation to Messrs. H. G. Talmadge, Jr., and R. J. Orsino for their helpful suggestions during both the preparation of the proposal and the writing of this report.

REFERENCES

1. Talmadge, H.G., Jr., and Orsino, R.J., "Operation and Performance of the NRL Satellite Position Display," NRL Report 6219, Aug. 11, 1965

2. Boller, J.R., "A Random-Scan Display of Predicted Satellite Positions," NRL Report 6453, Oct. 25, 1966

3. Orsino, R.J., and Francavilla, T.L., "Simplified Prediction Equations for the NRL Satellite Position Display," NRL Report 6396, Aug. 4, 1966

4. Orsino, R.J., and Francavilla, T.L., "Computer Program for the NRL Satellite Position Display," NRL Report 6446, Dec. 5, 1966

APPENDIX

LIST OF ABBREVIATIONS

CAT. CYCLE	– Category Cycle
CAT. OL	– Category Overload
CAT. SEL./DEL.	– Category Select/Delete
FAST BACK	– Fast Backwards
FAST FOR.	– Fast Forwards
OFF-CEN.	– Off-Center
OS OFF.	– Own Ship Off-Center
SAT. SEL.	– Satellite Select
SAT. DEL.	– Satellite Delete
SLOW BACK.	– Slow Backwards
SLOW FOR.	– Slow Forwards
SYM. SEL.	– Symbol Select
TAB. READOUT	– Tabular Readout
TIME SEL.	– Time Select

Security Classification

DOCUMENT CONTROL DATA - R & D

(Security classification of title, body of abstract and indexing annotation must be entered when the overall report is classified)

1. ORIGINATING ACTIVITY (Corporate author) Naval Research Laboratory Washington, D.C. 20390	2a. REPORT SECURITY CLASSIFICATION Unclassified 2b. GROUP

3. REPORT TITLE

USE OF NTDS AS A SATELLITE DISPLAY

4. DESCRIPTIVE NOTES (Type of report and inclusive dates)

This is an interim report on the problem.

5. AUTHOR(S) (First name, middle initial, last name)

J.R. Boller

6. REPORT DATE June 7, 1967	7a. TOTAL NO. OF PAGES 20	7b. NO. OF REFS 4
8a. CONTRACT OR GRANT NO. NRL Problem Y01-01 b. PROJECT NO. SF 019-01-03, Task 6168 c. d.	9a. ORIGINATOR'S REPORT NUMBER(S) NRL Report 6544 9b. OTHER REPORT NO(S) (Any other numbers that may be assigned this report)	

10. DISTRIBUTION STATEMENT

Distribution of this document is unlimited

11. SUPPLEMENTARY NOTES	12. SPONSORING MILITARY ACTIVITY Department of the Navy (Naval Electronics Systems Command) Washington, D.C. 20360

13. ABSTRACT

With the completion of the NRL evaluation of the experimental model of the Satellite position Prediction and Display equipment (SPAD), efforts have been directed toward the consideration of an operational version of SPAD. One possible equipment configuration, which would lead to a substantial savings in cost and development time, incorporates the SPAD functions into the Naval Tactical Data System (NTDS). By time sharing the NTDS computer through suitable programming, one of the display consoles in an NTDS facility could be used to present a SPAD display without interrupting service to the other NTDS displays. This proposal is based on the premise that no hardware modifications or additions are to be made to the NTDS equipment except for changing certain labels. Also the time required for switching a display console between NTDS and SPAD should be kept to a minimum. It appears that all of the original SPAD features can be incorporated into the NTDS equipment without any conflict with these ground rules. The NTDS-SPAD concept will give an NTDS-equipped ship a satellite display capability at minimal additional cost.

DD FORM 1 NOV 65 1473 (PAGE 1)

S/N 0101-807-6801

Security Classification

Security Classification

14. KEY WORDS	LINK A		LINK B		LINK C	
	ROLE	WT	ROLE	WT	ROLE	WT
Satellite display system						
Naval Tactical Data System (NTDS)						
Satellite position Prediction and Display (SPAD)						
Display consoles						
Shipborne display systems						

DD FORM 1 NOV 65 1473 (BACK)
(PAGE 2)

Security Classification