2127

NRL Report 6326

An Acoustic Ray Ship Positioning and Tracking System

H. N. Van Ness, R. L. Mills, and K. R. Stewart

Sonar Systems Branch
Sound Division

October 12, 1965

APPROVED FOR PUBLIC RELEASE - DISTRIBUTION UNLIMITED

U.S. NAVAL RESEARCH LABORATORY
Washington, D.C.

CONTENTS

Abstract	ii
Problem Status	ii
Authorization	ii
INTRODUCTION	1
THEORY	2
INSTRUMENTATION	3
OPERATION	9
APPENDIX - Error Analysis	12

ABSTRACT

A ship positioning and underwater tracking system for general oceanographic work has been developed at the U.S. Naval Research Laboratory. The positioning and tracking is accomplished by measuring the length of acoustic rays emitted by a single sound source and received by three ship-mounted hydrophones. The ray lengths are independent variables in a set of tracking equations. The sound source is an acoustic transponder.

The transponder, which is moored to the ocean bottom or attached to an underwater vehicle, transmits when interrogated acoustically from the ship. A small general purpose digital computer is programmed with the solutions to the tracking equations. The computer also controls and monitors the auxiliary equipment which makes up the entire system.

This tracking system was installed aboard the USNS MIZAR in the spring of 1964. It was used in the North Atlantic Ocean during the summer and fall of 1964 and the winter of 1964-1965.

PROBLEM STATUS

This is an interim report. Work on the problem is continuing.

AUTHORIZATION

NRL Problem S01-25
Project RF 001-03-46-4205

Manuscript submitted July 15, 1965.

AN ACOUSTIC RAY SHIP POSITIONING AND TRACKING SYSTEM

INTRODUCTION

A problem associated with deep-water oceanographic work is the accurate positioning of a ship with respect to a given fixed point on the earth. Seldom can there be found landmarks for taking pelorus sightings. Ship positioning therefore has to be accomplished with respect to a fixed point on the ocean bottom. (It is assumed here that radio navigation systems cannot continuously provide the required precision.) Further, when towing an instrumented vehicle from a surface ship in deep water, it is often desirable or necessary to know the relative position of the towed vehicle with respect to the ship. Ship-positioning and tracking systems have been developed by various laboratories and by research and development firms.

The Sonar Systems Branch of the Sound Division of the U.S. Naval Research Laboratory (NRL) has developed a ship-positioning and tracking system that meets the requirements for oceanographic work. This system, which is installed on the ship itself, has much in common with other ship positioning systems and operates on the same principle. Propagation times of an acoustic signal between a sound source and three hull-mounted hydrophones are measured. The incoming signals from the three hydrophones are detected and processed through appropriate receivers so that the transit times of the acoustic pulse received by the three separate hydrophones can be accurately determined. A computer, programmed with a set of tracking equations, receives the transit time information along with other data and computes the position of the ship relative to the sound source (or of the sound source relative to the ship). Instead of using a special purpose computer as do most other systems, the NRL system uses a small, general purpose, digital computer.

The sound sources used are transponders. The transponder transmits an acoustic pulse when it is interrogated by a proper acoustic signal from a projector aboard the ship. The projector or transducer is a hydrophone of the receiving array. For ship positioning a transponder is moored on the ocean bottom, and this serves as a fixed or reference point.

A self-propelled underwater vehicle can also be tracked with respect to the surface ship or the fixed point. By equipping this vehicle with a transponder that has an interrogation frequency different from that of the moored transponder, the position of the vehicle with respect to the surface ship can be determined. By alternately interrogating the two transponders, computing their respective positions, and taking the difference of their coordinates, the position of the underwater vehicle with respect to the moored transponder can be determined.

If a towed instrumented vehicle is to be tracked then this vehicle should be equipped with a "responder." The responder functions the same as the transponder, but it is not interrogated acoustically. The responder transmission is initiated by a signal sent through the towing cable with the aid of a wired telemetry set.

All the interrogation signals are initiated by the computer in the surface ship. The transit times of the acoustic signals from the transponder or responder are the independent variables in the set of tracking equations stored in the computer. Other information needed in order to compute position is ship's heading, pitch, and roll.

The general purpose computer has several advantages over special purpose computers that are specifically designed to be used in tracking or ship positioning. The general purpose computer is more flexible in operation and is available to control the instrumentation which gathers and processes data.

THEORY

To compute the relative position of an acoustic beacon with respect to a hydrophone array, consider Fig. 1.

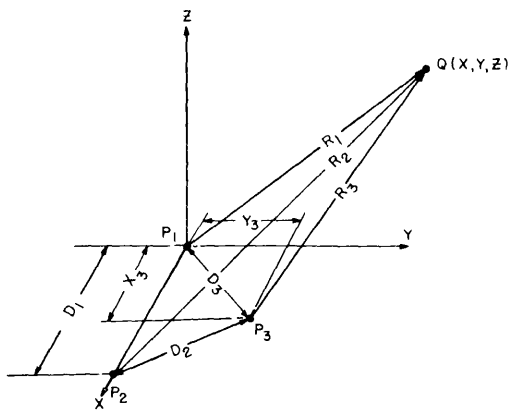

Fig. 1 - Geometrical relationship of hydrophones at P_1, P_2, and P_3 and transponder at Q

Let P_1, P_2, and P_3 be the hydrophones, let them be nonlinearly positioned and let them define the x-y plane. Let point Q be the location of an acoustic beacon and R_1, R_2, and R_3 be the distance from Q to P_1, P_2, and P_3 respectively. Then

$$x^2 + y^2 + z^2 = R_1^2 \tag{1}$$

$$(x - D_1)^2 + y^2 + z^2 = R_2^2 \tag{2}$$

$$(x - x_3)^2 + (y - y_3)^2 + z^2 = R_3^2 . \tag{3}$$

Equations (1), (2), and (3) are the equations of three spheres with centers at P_1, P_2, and P_3. The simultaneous solution of these equations for x, y, and z gives

$$x = \frac{R_1^2 - R_2^2}{2D_1} + \frac{D_1}{2} \tag{4}$$

$$y = \frac{R_1^2 - R_3^2}{2y_3} - \frac{xx_3}{y_3} + \frac{x_3^2 + y_3^2}{2y_3} \tag{5}$$

$$z = \pm \sqrt{R_1^2 - x^2 - y^2} . \tag{6}$$

These are the basic tracking equations in which

$$R_1 = ct_1 \tag{7}$$

$$R_2 = ct_2 \tag{8}$$

$$R_3 = ct_3 \tag{9}$$

where c is the velocity of sound in water and t_1, t_2, and t_3 are the transit times of an acoustic wave front traveling from Q to P_1, P_2, and P_3 respectively.

The solutions of the tracking equations imply that the answer is an intersection of three spheres in space. Three spheres can intersect in no more than two points when the sphere centers are not colinear. Since z by definition of the figure is the vertical dimension, it was arbitrarily determined to take only the positive square root and define that as depth. By this definition a negative z would be above sea level which is impossible for the problem under discussion.

The origin of the coordinate system is assumed to be at P_1 with the positive x axis in the direction from P_1 to P_2. Practical considerations when mounting hydrophones on a ship may be such that the P_1 and P_2 reference points will not be positioned parallel to any convenient reference system, for example, the ship's centerline, and the xy plane may not be horizontal. This is not really a problem when computing position because, by using the proper matrix in the computation, the coordinates can be transformed to any convenient reference system and the xy plane can be rotated into a horizontal plane.

During tracking operations, when using any shipboard oriented coordinate system, ship maneuvering and wave action will cause the ship to pitch and roll and the reference axis will be always changing with respect to true north. Therefore, the coordinates of the unknown point must be transformed to a horizontal coordinate system with the reference axis oriented north, when a position is computed.

INSTRUMENTATION

Several tasks have to be performed by the instrumentation in order to compute and display coordinates. The instrumentation, either monitored or controlled by the computer, has to initiate the acoustic signal by interrogating a sound source, receive this signal and determine its separate transit times to the three hydrophones, sense the ship motion and heading, and transfer this information and the time of day into the computer memory.

The operation of the instrumentation is identical for transponders and responders except for the initiation of the interrogation signal. The mode of operation is selected by choosing the appropriate entry into the computer program.

The instrumentation that is used for the tracking system is a combination of commercially available stock items and of instruments that were designed and built at NRL. None of this equipment was designed specifically to be integrated into such a system with the exception of the sonar receivers, transponders, and transducers.

Figure 2 shows the major components of the system except for the transponder. The most critical portion is composed of the receiving and time generating instruments. These instruments, the hydrophones, the sonar detector which is the acoustic receiver, and the three universal counter/timers, are operated by two control pulses initiated by the computer and by the acoustic pulse emitted from the transponder (or responder).

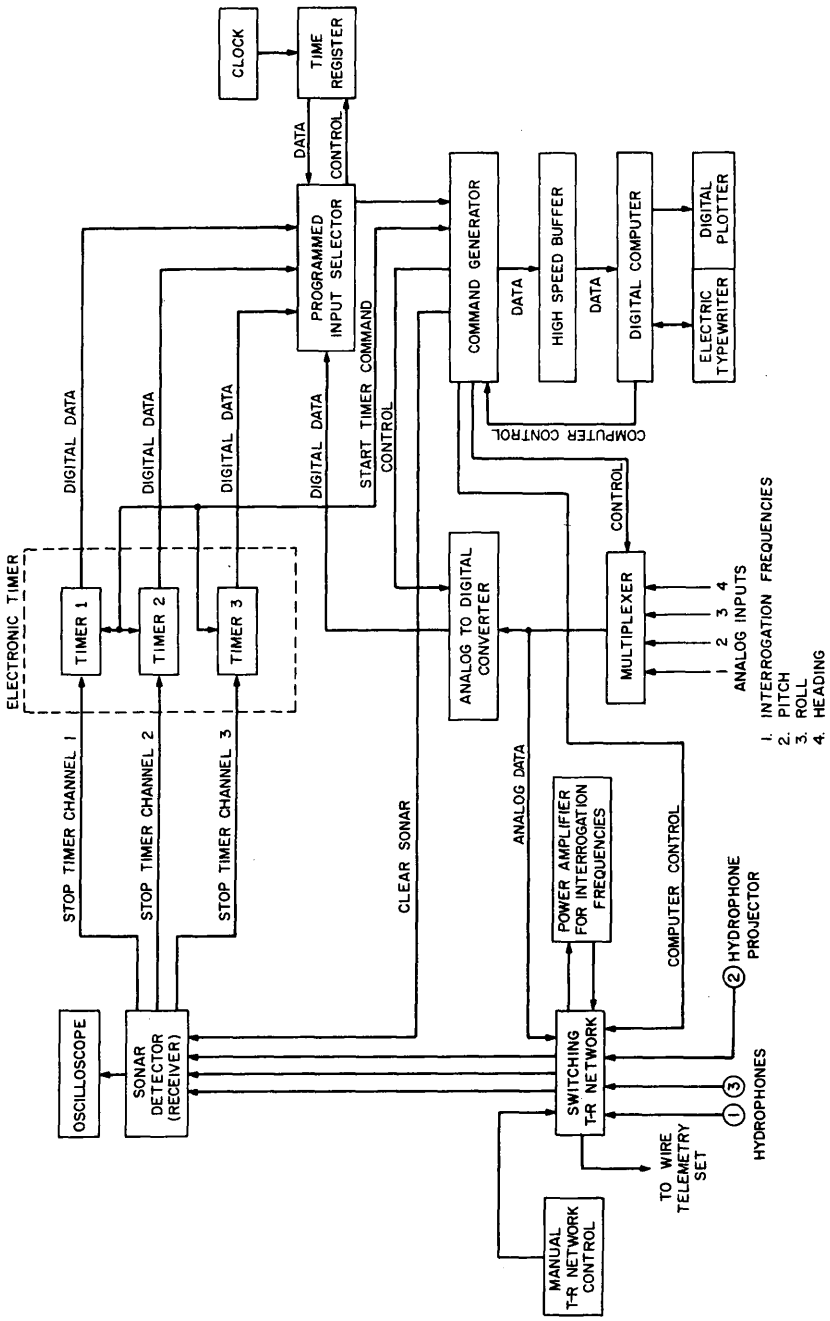

Fig. 2 - Block diagram of tracking system exclusive of transponder

The ship positioning or tracking system requires an array of three hydrophones to be mounted on the hull of the ship, as stated above. The hydrophones are transducers made of barium titanate cast in hemispheres. The transducer assembly, which includes an outer rubber covering and suitable hardware for holding the barium titanite hemisphere, electrical feed-throughs, and cable seals, provides a means for mounting.

The transducers are mounted in wells that extend 16 feet below the water line. A diagram of the transducer mounting is shown in Fig. 3.

The geometric arrangement of the hydrophones with respect to the ship and to each other is shown in Fig. 4. The cables from the hydrophones are terminated at the sonar receiver inputs via internal ship's wiring. The receiving sensitivity of the hydrophones at the frequency used, 16.666 kc/s, is -96 db-v/μbar.

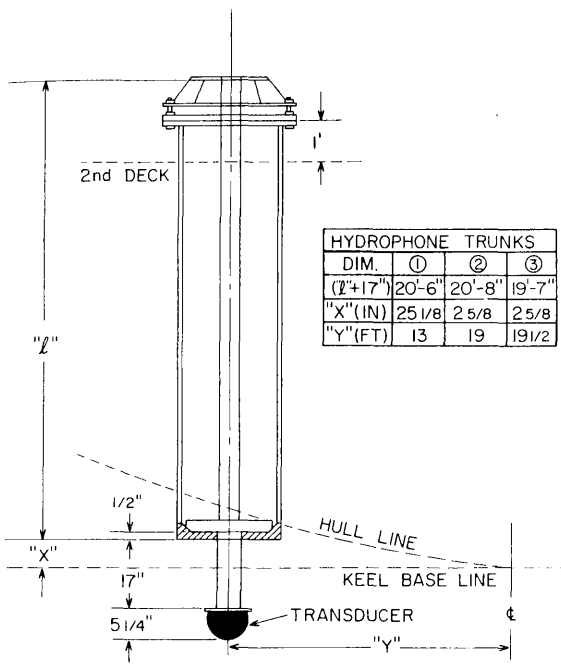

Fig. 3 - Transducer trunks on MIZAR T-AGOR-II

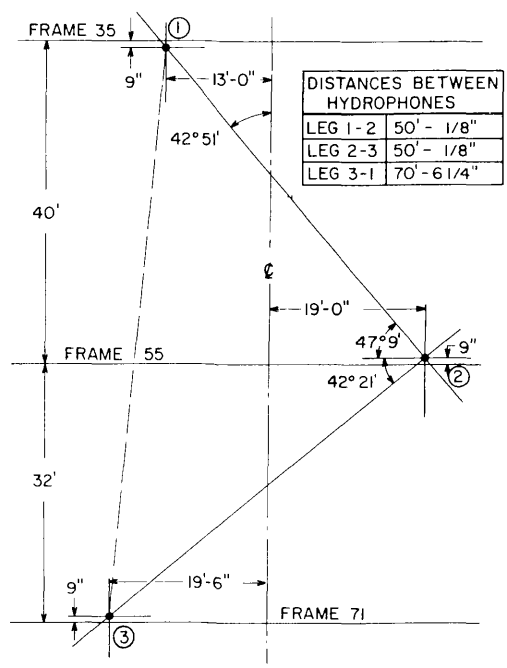

Fig. 4 - Tracking system hydrophone positions on USNS MIZAR T-AGOR-II

The sonar detector consists of three separate but identical channels; one hydrophone is connected to each channel. The input of each sonar channel has a network for tuning out the reactive component of the impedance of each hydrophone. The maximum amplifier gain of each channel is 100 db. In addition to detection and gain each sonar channel is equipped with several signal processing circuits.

A tuned filter can be switched in and out of each channel at the operator's discretion. Narrow-band operation is used when the ambient noise level reduces the signal-to-noise ratio to a point where effective tracking cannot be maintained. Experience has quickly indicated, however, that whenever the ship is underway, even at its slowest speed, and/or the slant range is greater than 4000 ft, the filter has to be used, that is, narrow-band operation is required. The bandwidth of the 16.666 kc/s filter is 2 kc/s.

The narrower bandwidth does lengthen the rise time of the acoustic pulse. Because some of the circuits in the receiver are threshold operated the narrow-band filter will cause an apparent increase in the transit time of the acoustic pulse. Therefore, an error in the computation of coordinates is immediately generated. If the error in time measurement is the same in each channel, then this error is not at all serious, and it can be mitigated somewhat by making compensating adjustments in the computer program. If, on the other hand, time measurement errors are different in each channel, then the final errors will be quite serious. Errors are discussed in the Appendix.

A schematic of one of the receiver channels is shown in Fig. 5. The circuit shows two inputs and two outputs, each having its own separate function. One input is the hydrophone, which has been discussed above. The other input is a computer-initiated pulse that resets the "stop-timer" bistable multivibrator. This pulse is called the "clear-sonar" pulse.

When the acoustic signal from a transponder (or responder) is received and detected the "stop-timer" bistable multivibrator is turned to its "on" state and stops an electronic timer. The "stop-timer" pulse is one of two outputs from the receiver channel.

The other output is the amplified acoustic pulse, superimposed on a dc level. The dc level changes from a ground state to 1 volt when the clear sonar signal is received and reverts to its initial state when a signal in the water is received and detected. This output is connected to an oscilloscope so the operator can adjust the gain of each channel for best operation. He can also tell if noise is interfering with the operation of the system, that is, whether noise or the pulse is turning off the electronic timer. This is easily noted by observing whether the dc level of the oscilloscope trace return to its ground state prior to the arrival of the acoustic signal. If this is the case the dc level will be at the ground state before the transponder pulse is detected.

If, on the other hand, the transponder pulse fails to trigger this multivibrator circuit consistently, then the operator knows that there is a malfunction in the system; for example, range too great, weak transponder, low gain, or receiver fault. In any case the incorrect computation that results can be noted. The timer used is a standard electronic, event per unit time, counter/timer. The clear sonar pulse, which is initiated by the computer, is followed by a "start-timer" pulse, which starts the timer counting time in 10-microsecond increments.

The measurement of the transit time is made in two increments. The first and larger increment is measured by the clock in the computer. The second increment is measured by the universal counter/timers, one for each channel. The duration of the initial increment is proportional to a number in a memory location of the computer. The computer stands idle during this time, but at the expiration of this time the computer initiates the clear sonar pulse and starts the timers. The incoming acoustic signal from the transponder causes the timer to stop. The time registered on the counters is held long enough for this information to be transferred into computer memory. Most universal counter/timers have an output jack on the rear of the chassis for obtaining electrically what the front indicators register.

The time registered by the counter is added to the time the computer measures for the total travel time. For transponder operation this total time is divided by two and multiplied by the speed of sound in the water to give a one-way ray length. This is repeated for each sonar receiver channel. The ray lengths are substituted into the tracking equations. It is assumed that there is not a significant delay in the transponder between the time of reception and the time of transmission.

The number in the memory location for determining the larger part of the individual transit times can be adjusted during each computation cycle. The initial time interval

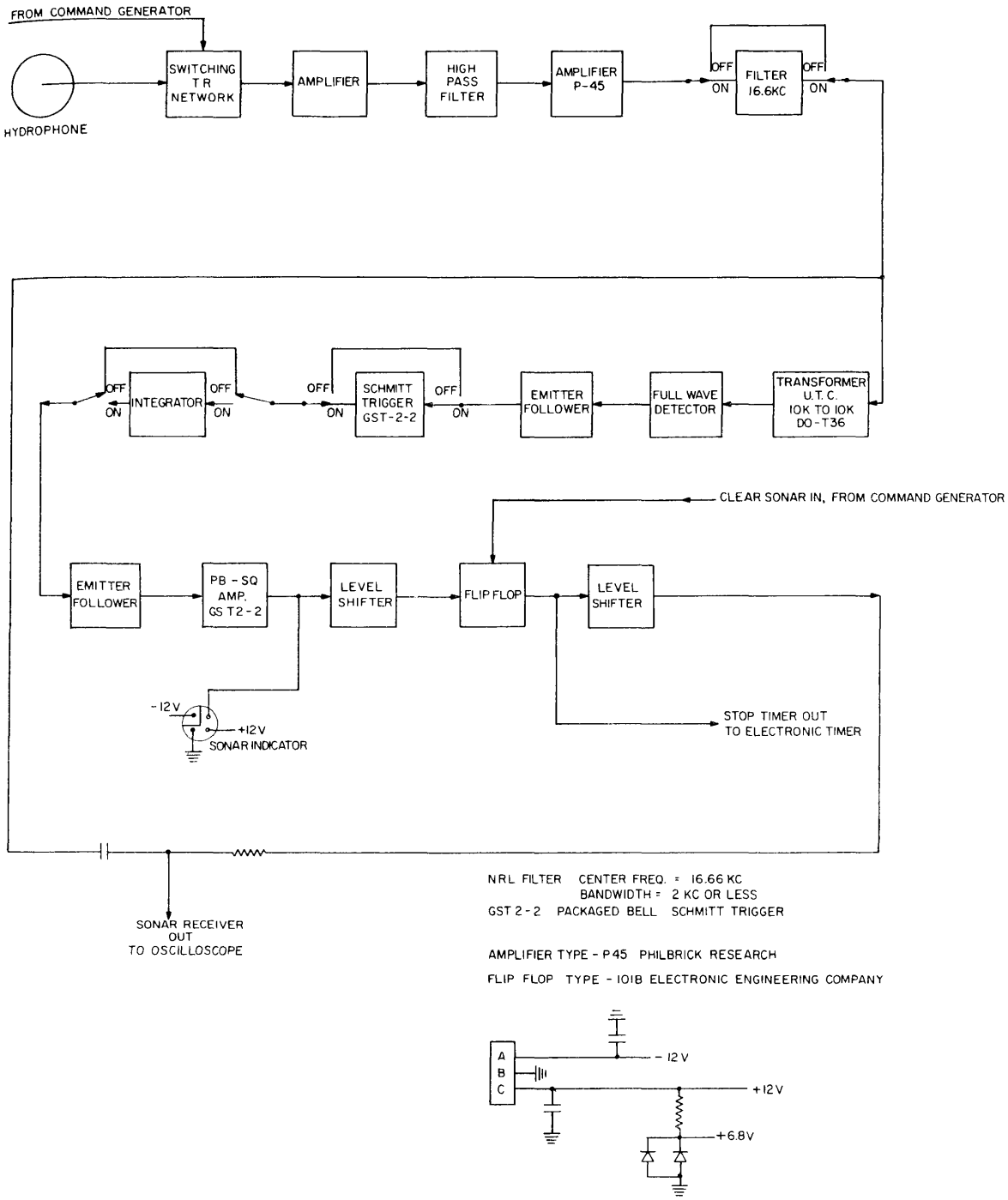

Fig. 5 - Block diagram of sonar receiver for acoustic ray tracking system (one of three separate channels)

measured by the computer for the current computation is "predicted" on the basis of the previous computation. This time is always kept less than the anticipated total time in order that the receiver will be gated "on" prior to the arrival of the acoustic signal from the transponder. This is the "range-gate" feature of the program. It is discussed further in the section on operation.

The computer initiates commands to all of the instrumentation through the high-speed buffer and command generator. The excitation voltage to execute the computer's external commands come directly from the command generator. Information is taken into the computer memory from the programmed input selector.

The programmed input selector can handle words of 22-bit length of data. It too is operated on commands initiated by the computer. As can be seen by referring to Fig. 2, the inputs to this equipment are connected to external instrument generating or recording data in digital form. The equipment that has its data recorded are the three counter/timers mentioned above, the analog-to-digital converter, and a clock. Data acquisition is executed on commands from the command generator. The command generator in turn "takes its orders" from the computer.

The data from the analog-to-digital converter are for ship's heading and ship's motion of pitch and roll. For ship positioning with respect to a moored transponder, the directions as well as the distances must be specified. The directions north or south and east or west are used as opposed to range and bearing. A gyro compass Mk 22 Mod 0 provides an accurate direction sensor. A synchro transmitter in the compass is connected in external synchro receiver. The synchro receiver drives a 360-degree potentiometer, and a stable voltage of 10 volts is connected across the potentiometer. The voltage output is then directly proportional to the compass heading.

All coordinates computed by the ship positioning system are with respect to the hydrophone array. The hydrophones are rigidly attached to the ship and the ship is constantly moving due to maneuvering and wave action. Therefore, all ship motion must be detected and measured so that the coordinate system can be transformed to a constant orientation.

A vertical gyro is used to detect ship's motion of pitch and roll. The outputs from the vertical gyro are standard synchro type for both pitch and roll. The synchro outputs from the vertical gyro are connected to a transformer and rectifying network that gives two dc voltages proportional to the sines of the pitch angle and the roll angle.

Although the motion sensing instrumentation has continuous outputs these data are sampled only immediately after the counter/timers are stopped.

For each of these data, heading, pitch, and roll, the computer initiates a series of commands. The commands switch the multiplexer, sample the analog-to-digital converter, and transfer the digitized data to the computer memory via the programmed input selector and high-speed buffer.

The only other digital datum taken into the computer is the time of day. Although the time is not needed for any computations, a display of the time along with the coordinates is made as a part of the permanent record. The computer executes commands sequentially and cannot take in the data and information from the external instrumentation simultaneously. However, all of the data is taken into the computer memory within 100 milliseconds. During this time the change in the ship's motion is nil, and the coordinate system is in essentially the same orientation as when the transponder pulse is received. Also the time from the clock is registered only to the nearest second. Therefore, no significant errors are caused by the sequential operation of the computer.

A mode of operation is determined by the commands initiated by the computer and given to the multiplexer and transmit-receive (T-R) network. In addition to the motion sensing instruments, oscillators are also connected to inputs of the multiplexer. The frequencies of these oscillators are tuned to the interrogation frequencies of the transponders. To interrogate the responder a frequency is needed to command the wired telemetry equipment channel for operating the responder.

A command to the multiplexer switches the frequency corresponding to the mode of operation. A command to the T-R network switches the frequency to either the telemetry set or power amplifier that feeds the projector transducer. The T-R network also operates three relays, which switch one of the transducers from a receiver input to the power amplifier output. This hydrophone becomes the projector for transmitting the interrogation frequencies of the transponder. The other relays disconnect the other two hydrophones from the receiver input and ground them. This is required so that the receiver will not be overdriven and damaged during the transmit portion of the cycle.

The transponders and the responder have identical outputs. Their output source level is 90 db above 1 dyne/cm^2, referenced at one yard. The receivers of the transponder are tuned to various frequencies in the 17 kc/s to 18 kc/s range. A narrow-band tuned filter, using a miniature tuning fork, maintained the frequency stability of the receiver. (It is found in practice that the resonant frequency of the tuning fork changes significantly with temperature. This requires a change in the interrogation frequency when the transponders are placed in the cold water of the deep ocean.)

OPERATION

The operation of the ship positioning or tracking system falls into two parts: manual operation and computer controlled operation. These two functions are carried on simultaneously and continuously. The computer's operation is determined beforehand by the program. However, program changes can be easily made at any time to fit new situations if necessary.

The program for tracking includes all commands for operating the ancillary equipment, transferring the data in digital form from external sources, making the computations, and displaying the coordinates along with the time of day and the object tracked.

One of the noise discriminating features of the system is a "range-gate" subroutine in the computer program. During normal operation the slant range between the transponder and the ship does not change very much between two consecutive computations. This being the case, the transit time of the tracking pulse does not change by more than a few milliseconds if the computation cycle is short enough. The range gate subroutine controls the time of initiation of the clear sonar signal. The actual time of initiation of the next clear sonar signal depends on the transit time from the previous computation. The clear sonar pulse is sent to the receiver immediately after the expiration of the coarse time interval of total transit time. During each computation cycle this coarse time is adjusted, if necessary, depending on whether the slant range is increasing or decreasing. For optimum operation it was found best to clear sonar 10 milliseconds to 20 milliseconds before the anticipated time of arrival of the transponder reply.

Excitation of the receiver by noise is impossible prior to gating the receiver output. Hence the chances of turning off the counter/timer prematurely is reduced by delaying the clear sonar signal to the receiver as long as practical. This greatly increases the reliability of the system.

However, the range gate does have one drawback if the noise level in the water increases temporarily. Under this condition the receiver output will turn off the

counter/timer immediately after clear sonar and the resulting computations may appear to be valid when compared to previous ones. This is because the fine time increment registered by the counters is usually very small compared to the coarse time stored in the computer.

Initially the range gate is set to go off soon enough to insure that the receiver is gated open when the transponder pulses arrive. The excess time between clear sonar and the arrival of the pulse is decreased by a certain amount each computation cycle and the corresponding time added to the coarse time in the computer. The amount of decrease (or increase) can be set by the operator by adjusting the number in only one memory location.

The mode of operation is determined by the entry into the program. The modes of operation are:

1. Ship positioning using a bottom moored transponder.

2. Tracking a towed instrument package with respect to the ship.

3. Tracking a self-propelled underwater vehicle and positioning it with respect to the bottom moored transponder.

4. Positioning the towed body with respect to the moored transponder.

The modes of operation could be extended where necessary with no addition or, at most, a slight addition to the hardware.

The manual operation consisted primarily of monitoring the acoustic output from the receiver on an oscilloscope. The gain of the three sonar channels will also require manual adjustment from time to time. As stated in the section on instrumentation the operation of the acoustical portion of the system is easily monitored in this manner.

The absolute position of the ship will be dependent on how accurately the position of the transponder is known with respect to the earth. The site, for anchoring the transponder can be determined by radio navigation receivers, e.g., loran. After the general area of interest is known, positioning the ship with respect to the transponder is easily done after some experience has been gained. Many operations, however, require only repositioning of the ship over the same place, retracing a course over a relatively small distance, or just keeping a log of the ship's present position.

The tracking system described above was installed on the USNS MIZAR T-AGOR 11 in May 1964. It was used successfully in the North Atlantic during the summer and fall of that year and in the winter of 1964-1965.

Data, typical of normal operation, is shown in Fig. 6. The letter T in the extreme right-hand column indicates that the acoustic source was a transponder. In this particular run the MIZAR was towing an instrumented vehicle. The letters following the coordinate distance designate the direction of the towed vehicle from the ship. Whereas normally N means north, S means south, E means east and W means west, in this case N means forward of the ship, S means astern, and E and W mean starboard and port respectively.

The sequence of data shown in Fig. 6 has two obviously bad coordinate computations. They are at times 10 42 20 and 10 44 11. These are usually caused by noise radiated from the ship. The data output is by the computer-operated electric typewriter indicated in Fig. 2.

Time	East - West Coordinates (ft)	North - South Coordinates (ft)	Depth (ft)	
10 39 09	888 S	698 E	8240	T
10 39 25	886 S	669 E	8249	T
10 39 41	845 S	754 E	8244	T
10 39 57	887 S	680 E	8239	T
10 40 13	941 S	772 E	8228	T
10 40 29	943 S	572 E	8255	T
10 40 44	1068 S	628 E	8243	T
10 41 00	1118 S	613 E	8238	T
10 41 16	1105 S	528 E	8238	T
10 41 32	1127 S	750 E	8232	T
10 41 48	1082 S	649 E	8265	T
10 42 04	1169 S	807 E	8228	T
10 42 20-	1090 S	719 E	8274	T
10 42 36	1164 S	870 E	8229	T
10 42 52	1165 S	681 E	8241	T
10 43 08	1250 S	774 E	8225	T
10 43 24	1269 S	793 E	8244	T
10 43 40	1204 S	808 E	8252	T
10 43 55	1275 S	862 E	8235	T
10 44 11-	2640 S	29 W	8744	T
10 44 27	1322 S	826 E	8241	T

Fig. 6 - Typical data printout during an actual run. "T" in right hand column indicates that transponder was used as the acoustic beacon.

APPENDIX

Error Analysis

There are several sources of errors in the system just described. Already mentioned is the error caused by the extension of the rise time of the acoustic signal. Another source of error is that caused by ray bending. In the section on theory it was assumed that all rays from the sound source to the ship-mounted hydrophones travel in straight lines.

Although the universal event per unit time counter/timer can measure time to a precision of 0.1 microsecond, the limitations of the available hardware limit the measurement of time to increments of 10 microseconds as mentioned in the section on instrumentation. An analysis of the possible error caused by inaccuracies and imprecision in the measurement of transit times is made below.

With reference to Fig. 1 let t_1, t_2, and t_3 be travel times from P_1, P_2, and P_3 respectively. Let $t_1 + \Delta t_1$, $t_2 + \Delta t_2$, and $t_3 + \Delta t_3$ be the measured travel times where Δt_1, Δt_2, and Δt_3, are the differences between the actual and the measured travel times. It must be noted that Δt_1, Δt_2, and Δt_3 are never less than zero. From Eqs. (4), (7), and (8)

$$x = \frac{c^2(t_1^2 - t_2^2) + D_1^2}{2D_1} . \tag{A1}$$

The computed value of x denoted by $x + \Delta x$ can be written as

$$x + \Delta x = \frac{c^2\left[(t_1 + \Delta t_1)^2 - (t_2 + \Delta t_2)^2\right] + D_1^2}{2D_1} \tag{A2}$$

where Δx is the uncertainty in x due to Δt_1 and Δt_2. Expanding the terms inside the brackets,

$$x + \Delta x = \frac{c^2\left[t_1^2 + 2t_1\Delta t_1 + (\Delta t_1)^2 - t_2^2 - 2t_2\Delta t_2 - (\Delta t_2)^2\right] + D_1^2}{2D_1} . \tag{A3}$$

By subtracting Eq. (A1) from Eq. (A3) the travel time measurement error Δx can be written as

$$\Delta x = \frac{c^2\left[2t_1\Delta t_1 + (\Delta t_1)^2 - 2t_2\Delta t_2 - (\Delta t_2)^2\right]}{2D_1} . \tag{A4}$$

Because Δt_1 and Δt_2 are small in comparison to t_1 and t_2 respectively, Eq. (A4) can be rewritten as

$$\Delta x \approx \frac{c^2\left[t_1\Delta t_1 - t_2\Delta t_2\right]}{D_1} . \tag{A5}$$

Furthermore, t_2 can be written as: $t_2 = t_1 + (t_2 - t_1)$; thus

$$\Delta x \approx \frac{c^2 \left[t_1 (\Delta t_1 - \Delta t_2) - (t_2 - t_1) \Delta t_2 \right]}{D_1} . \tag{A6}$$

Maximum $(t_2 - t_1)$ is restricted by D_1 which is approximately 50 feet for the system described. Also by Fig. 1 it can be seen in general that $D_1 << R_1$ and $D_1 << R_2$, so Eq. (A6) can be approximated by

$$\Delta x \approx \frac{c^2 \left[t_1 (\Delta t_1 - \Delta t_2) \right]}{D_1} . \tag{A7}$$

Similarly by using Eq. (5),

$$\Delta y \approx \frac{c^2 \left[t_1 (\Delta t_1 - \Delta t_3) \right]}{D_1} \tag{A8}$$

and again by using Eq. (6), taking the positive value only of the radical,

$$\Delta z \approx -z + \sqrt{z^2 + 2c^2 t_1 \Delta t_1 - 2x \Delta x - \Delta x^2 - 2y \Delta y - \Delta y^2} . \tag{A9}$$

From Fig. 1 it can be seen that the slant range is $R_1 = c t_1$. Therefore from Eqs. (A7) and (A8) the uncertainty in the x and y coordinates is directly proportional to the magnitude of R_1. It is more difficult to generalize on the uncertainty in the z coordinate. However, an examination of Eq. (A9) shows that the uncertainty in the z coordinate depends on x, y, Δx, and Δy, and when these values are numerically small Δz is also small.

From this it can be stated that if the horizontal distance between the ship and transponder is small compared to the slant range then Δz will also be small, and conversely if the horizontal distance between the ship and the transponder approaches the slant range then Δz can be so large as to make the value of z very dubious.

To illustrate this consider the following two examples. In each example the following assumptions have been made:

c = 5000 feet per second

$|\Delta t_1 - \Delta t_2| \leq 0.000150$ sec

$|\Delta t_1 - \Delta t_3| \leq 0.000150$ sec.

The slant range in each case is 15,000 feet.

Example 1.

t_1 = 3.00000 sec + Δt_1 $\qquad 0 \leq \Delta t_i \leq 0.00020,\ i = 1,2,3$

t_2 = 2.99300 sec + Δt_2

t_3 = 2.99400 sec + Δt_3

for these assumed values of transit time

$x = 10512 \pm \Delta x$ feet $\qquad |\Delta x| \leq 225$ feet

$y = 9016 \pm \Delta y$ feet $\qquad |\Delta y| \leq 225$ feet

$z = 5762 \pm \Delta z$ feet $\qquad |\Delta z| \leq 830$ feet.

The maximum possible error in x and y is approximately 2%, while the error in z can be as great as 14%. In this case the x and y coordinates show that the horizontal distance between the ship and the sound source approaches that of the slant range.

Example 2.

$t_1 = 3.00000 \text{ sec} + \Delta t_1 \qquad 0 \leq t_i \leq 0.00020, \; i = 1,2,3$

$t_2 = 2.99930 \text{ sec} + \Delta t_2$

$t_3 = 2.99940 \text{ sec} + \Delta t_3$

for these assumed values of transit time

$x = 1049 \pm \Delta x$ feet $\qquad |\Delta x| \leq 225$ feet

$y = 924 \pm \Delta y$ feet $\qquad |\Delta y| \leq 225$ feet

$z = 14935 \pm \Delta z$ feet $\qquad |\Delta z| \leq 30$ feet.

The possible error in x and y has remained the same numerically but it can be greater than 20% of its coordinate length when the sound source is almost directly under the ship. The possible error in z is not significant.

When tracking a towed body at slow speeds the second example cited is more likely to be the case most of the time. For ship positioning with respect to a bottom-mounted transponder the first example can be typical a significant portion of the time. However, in this case x and y are of the greatest importance and the large uncertainty in z will not matter.

When tracking a self-propelled underwater vehicle occurrences typical of both examples can take place. Here the uncertainty in depth can be of concern.

In the two examples cited above, extremes in errors of time measurement are assumed. Also, the slant range was assumed larger than what has been experienced. The errors for the x and y coordinates are directly proportional to the slant range as shown by Eqs. (A7) and (A8).

For the data shown in Fig. 6 the slant range is approximately 8350 feet and slowly increasing. This slant range is slightly more than one half that used in the two examples above. Therefore, the largest errors in the coordinates of the horizontal plane are approximately one half of those computed in the two examples.

Security Classification

DOCUMENT CONTROL DATA - R&D

(Security classification of title, body of abstract and indexing annotation must be entered when the overall report is classified)

1. ORIGINATING ACTIVITY *(Corporate author)* U.S. Naval Research Laboratory Washington, D.C. 20390	2a. REPORT SECURITY CLASSIFICATION Unclassified 2b. GROUP

3. REPORT TITLE

AN ACOUSTIC RAY SHIP POSITIONING AND TRACKING SYSTEM

4. DESCRIPTIVE NOTES *(Type of report and inclusive dates)*

An interim report on the problem.

5. AUTHOR(S) *(Last name, first name, initial)*

Van Ness, H.N., Mills, R.L., and Stewart, K.R.

6. REPORT DATE	7a. TOTAL NO. OF PAGES	7b. NO. OF REFS
October 12, 1965	18	None

8a. CONTRACT OR GRANT NO. NRL Problem S01-25 b. PROJECT NO. RF 001-03-46-4205 c. d.	9a. ORIGINATOR'S REPORT NUMBER(S) NRL Report 6326 9b. OTHER REPORT NO(S) *(Any other numbers that may be assigned this report)*

10. AVAILABILITY/LIMITATION NOTICES

Distribution of this document is unlimited.

11. SUPPLEMENTARY NOTES	12. SPONSORING MILITARY ACTIVITY Department of the Navy (Office of Naval Research)

13. ABSTRACT

A ship positioning and underwater tracking system for general oceanographic work has been developed at the U.S. Naval Research Laboratory. The positioning and tracking is accomplished by measuring the length of acoustic rays emitted by a single sound source and received by three ship-mounted hydrophones. The ray lengths are independent variables in a set of tracking equations. The sound source is an acoustic transponder.

The transponder, which is moored to the ocean bottom or attached to an underwater vehicle, transmits when interrogated acoustically from the ship. A small general purpose digital computer is programmed with the solutions to the tracking equations. The computer also controls and monitors the auxiliary equipment which makes up the entire system.

This tracking system was installed aboard the USNS MIZAR in the spring of 1964. It was used in the North Atlantic Ocean during the summer and fall of 1964 and the winter of 1964-1965.

DD FORM 1 JAN 64 1473

Security Classification

14. KEY WORDS	LINK A ROLE	LINK A WT	LINK B ROLE	LINK B WT	LINK C ROLE	LINK C WT
Underwater sound equipment						
Navigation computers						
Depth finding						
Underwater sound signals						
Tracking						
Position finding						

INSTRUCTIONS

1. ORIGINATING ACTIVITY: Enter the name and address of the contractor, subcontractor, grantee, Department of Defense activity or other organization *(corporate author)* issuing the report.

2*a*. REPORT SECURITY CLASSIFICATION: Enter the overall security classification of the report. Indicate whether "Restricted Data" is included. Marking is to be in accordance with appropriate security regulations.

2*b*. GROUP: Automatic downgrading is specified in DoD Directive 5200.10 and Armed Forces Industrial Manual. Enter the group number. Also, when applicable, show that optional markings have been used for Group 3 and Group 4 as authorized.

3. REPORT TITLE: Enter the complete report title in all capital letters. Titles in all cases should be unclassified. If a meaningful title cannot be selected without classification, show title classification in all capitals in parenthesis immediately following the title.

4. DESCRIPTIVE NOTES: If appropriate, enter the type of report, e.g., interim, progress, summary, annual, or final. Give the inclusive dates when a specific reporting period is covered.

5. AUTHOR(S): Enter the name(s) of author(s) as shown on or in the report. Enter last name, first name, middle initial. If military, show rank and branch of service. The name of the principal author is an absolute minimum requirement.

6. REPORT DATE: Enter the date of the report as day, month, year; or month, year. If more than one date appears on the report, use date of publication.

7*a*. TOTAL NUMBER OF PAGES: The total page count should follow normal pagination procedures, i.e., enter the number of pages containing information.

7*b*. NUMBER OF REFERENCES: Enter the total number of references cited in the report.

8*a*. CONTRACT OR GRANT NUMBER: If appropriate, enter the applicable number of the contract or grant under which the report was written.

8*b*, 8*c*, & 8*d*. PROJECT NUMBER: Enter the appropriate military department identification, such as project number, subproject number, system numbers, task number, etc.

9*a*. ORIGINATOR'S REPORT NUMBER(S): Enter the official report number by which the document will be identified and controlled by the originating activity. This number must be unique to this report.

9*b*. OTHER REPORT NUMBER(S): If the report has been assigned any other report numbers *(either by the originator or by the sponsor)*, also enter this number(s).

10. AVAILABILITY/LIMITATION NOTICES: Enter any limitations on further dissemination of the report, other than those imposed by security classification, using standard statements such as:

(1) "Qualified requesters may obtain copies of this report from DDC."

(2) "Foreign announcement and dissemination of this report by DDC is not authorized."

(3) "U. S. Government agencies may obtain copies of this report directly from DDC. Other qualified DDC users shall request through _____."

(4) "U. S. military agencies may obtain copies of this report directly from DDC. Other qualified users shall request through _____."

(5) "All distribution of this report is controlled. Qualified DDC users shall request through _____."

If the report has been furnished to the Office of Technical Services, Department of Commerce, for sale to the public, indicate this fact and enter the price, if known.

11. SUPPLEMENTARY NOTES: Use for additional explanatory notes.

12. SPONSORING MILITARY ACTIVITY: Enter the name of the departmental project office or laboratory sponsoring *(paying for)* the research and development. Include address.

13. ABSTRACT: Enter an abstract giving a brief and factual summary of the document indicative of the report, even though it may also appear elsewhere in the body of the technical report. If additional space is required, a continuation sheet shall be attached.

It is highly desirable that the abstract of classified reports be unclassified. Each paragraph of the abstract shall end with an indication of the military security classification of the information in the paragraph, represented as *(TS), (S), (C), or (U)*.

There is no limitation on the length of the abstract. However, the suggested length is from 150 to 225 words.

14. KEY WORDS: Key words are technically meaningful terms or short phrases that characterize a report and may be used as index entries for cataloging the report. Key words must be selected so that no security classification is required. Identifiers, such as equipment model designation, trade name, military project code name, geographic location, may be used as key words but will be followed by an indication of technical context. The assignment of links, roles, and weights is optional.