NRL REPORT P-3339

AIRBORNE DUAL-CHANNEL RADIATION DETECTION SYSTEM

F. Malcolm Gager
Garold K. Jensen
Emerson N. Zettle

August 25, 1948

CLASSIFICATION CHANGED TO Unclassified
BY AUTHORITY OF NRL ltr 1515-560/52 dln
Reference Authority
ON 23 Oct 1952
(DATE)
[signature]
Name of Custodian

Approved by:

Dr. R. M. Page, Superintendent, Radio Division III

NAVAL RESEARCH LABORATORY
CAPTAIN H. A. SCHADE, USN, DIRECTOR
WASHINGTON, D.C.

APPROVED FOR PUBLIC
RELEASE - DISTRIBUTION
UNLIMITED

DISTRIBUTION

CNO	
Attn: OP-36	(2)
Attn: OP-55F4	(2)
ONR	
Attn: Code 110	(2)
Attn: Code N-482	(2)
BuAer	
Attn: Code MA-5	(2)
Attn: Code AE 45	(2)
BuShips	
Attn: Code 945	(2)
Dir., USNEL	(2)
CO, USNOTS	
Attn: Reports Unit	(2)
OCSigO	
Attn: Ch. Eng. & Tech. Div., SIGTM-S	(1)
Attn: Eng. & Tech. Div., SIGGE-2	(2)
CO, SCEL	
Attn: Dir. of Engineering	(2)
Ch. of Staff, USAF, Material	(6)
Ch. of Staff, USAF	
Attn: DCS/O, Special Weapon Group, AFOAT-1	(5)
Atomic Energy Commission	
Attn: Mr. B. M. Fry, Library	(3)
RDB	
Attn: Library	(2)
Attn: Navy Secretary	(1)
Science and Technology Project	
Attn: Mr. J. H. Heald	(2)

CONTENTS

Abstract	iv
Problem Status	iv
Authorization	iv
INTRODUCTION	1
DESCRIPTION OF SYSTEM	1
SHOCK AND VIBRATION MOUNTING FACILITIES	11
ESTERLINE-ANGUS RECORDER ALTERATIONS AND ADJUSTMENTS	13
LABORATORY EVALUATION OF THE SYSTEM AND ITS COMPONENTS	14
FLIGHT EVALUATION	18
FLIGHT DATA	21
MAINTENANCE AND OPERATION OF SYSTEM	21
CONCLUSIONS AND RECOMMENDATIONS	24
ACKNOWLEDGMENT	24
APPENDIX A: TWO-FOLD ACCIDENTALS	25

ABSTRACT

An Airborne Dual-Channel Radiation Detection System has been developed and put through flight tests. The purpose of the system is to detect and record the intensity of radioactivity present in the atmosphere through which the equipment is flown. The system separately and continuously records with time the cosmic or coincident count (C) and the soft gamma or total-minus-coincident count (T-C). Twelve individual systems were developed and produced at the Naval Research Laboratory.

It is concluded on the basis of flight use that this equipment is operationally satisfactory and that relatively instantaneous variations in $\Delta(T-C)/(C)$ serve to detect changes in gamma radiation.

Recommendations for further development of this type of detection system are made. More sensitive and reliable Geiger-Muller tubes could be used to advantage. Also printed data (numerical) as a function of time could be arranged as a substitute for, or in conjunction with, the inking-type recorders described as a part of this equipment.

PROBLEM STATUS

This report completes that phase of Problem N03-08 which was undertaken by Radio Division III. Work on this problem is continuing under the current designation of P07-04R.

AUTHORIZATION

NRL Problem No. N03-08.

AIRBORNE DUAL-CHANNEL RADIATION DETECTION SYSTEM

INTRODUCTION

This report describes a radiation detection system of the dual-channel counting-rate type which is used for continuously recording with time both the cosmic or coincident count (C) and the soft gamma or total-minus-coincident count (T-C). The equipment was primarily designed for unattended airborne use, however it can be employed on attended flight or on mobile or ground station applications where a suitable primary power supply is available.

DESCRIPTION OF SYSTEM

The system consists of a Radiation Detection Unit, a Dual-Channel Counting Rate Unit and auxiliary recorders for recording the coincident and soft gamma count as a function of time. A block diagram of the system is shown in Figure 1, and Figure 2 shows an assembly of a major portion of the system components together with special aircraft shock-mounting facilities. In Figure 1, the dotted lines surround the four main units displayed by Figure 2.

Radiation Detection Unit

The Radiation Detection Unit, (Figures 3 and 4), contains a hexagonal array of ninteen Geophysical Laboratories Geiger-Muller tubes powered from a high-voltage regulated power supply of the rectified radio-frequency type. The pulse output of the Geiger-Muller tube bank actuates a compound 6L6 cathode follower which has a 6L6 type tube as the cathode resistor. This cathode follower arrangement supplies sufficient current to preserve the pulse shape, thus allowing for considerable separation (approximately 100 feet) of the Radiation Detection Unit and the Rate Meter Unit to facilitate mounting the Geiger-Muller tube bank in the most advantageous position in an aircraft. The compound follower stage and the r-f power supply are powered from a dynamotor operable from nominal aircraft 26.5-volt d-c supply. Some relay controls are also shown associated with this unit. One relay, operated from the plate current of the cathode follower stage, provides time-delay so that the Geiger-Muller tubes are not over-voltaged before the regulator tubes in the power supply determine the proper operating voltage. This relay operates a high-voltage relay from the aircraft 26.5-volt supply mains which in turn switches regulated high voltage to the Geiger-Muller tube bank. In addition, further switching of this high-voltage relay is provided by a cam-acutated microswitch attached to the clock mechanism of one of the Esterline-Angus recorders. (Figure 1),for the purpose of periodically sampling the electrical zero-level in both channels. This provision was found essential because of the wide variation of primary voltage experienced in aircraft take-off and flight operations.

The Geiger-Muller tubes employed in this unit are of the self-quenching type filled with argon and diethyl ether. Due to the inherent action of these tubes to gamma radiation,

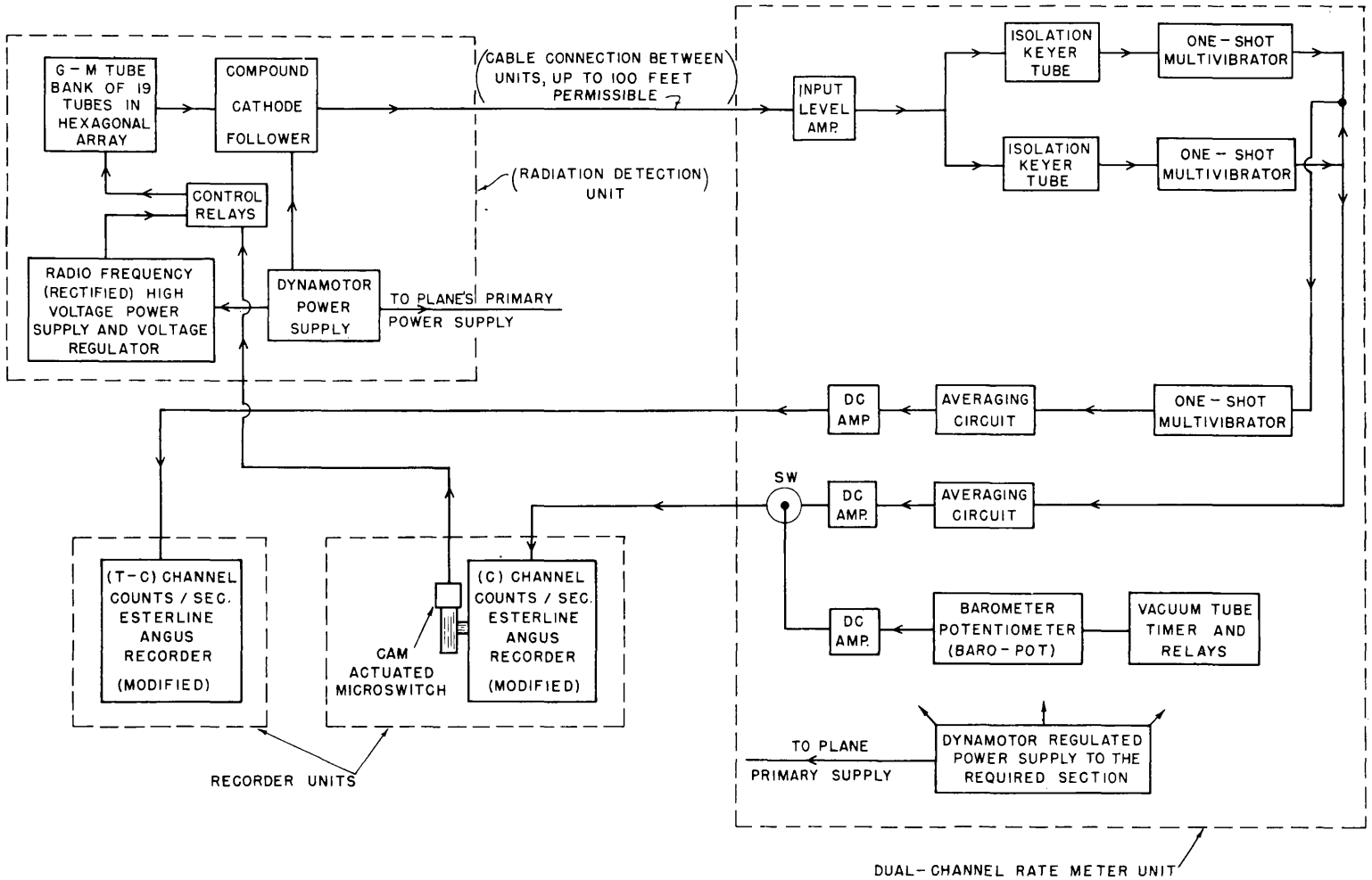

Fig. 1 - Block Diagram of Airborne Dual-Channel Radiation Detection System

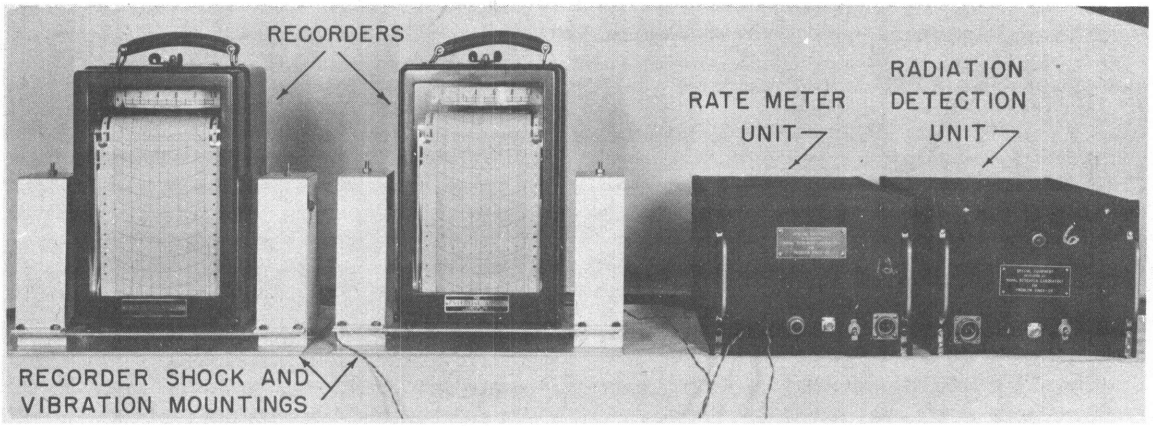

Fig. 2 - Airborne Dual-Channel Radiation Detection System

the negative pulse output of the Radiation Detection Unit is a random mixture of single tube pulses (soft gamma) and multiple tube pulses of double (or higher) amplitude due to hard gamma-ray coincidence on two or more Geiger-Muller tubes in the bank. It is noted, Figure 5, that the Geiger-Muller tubes are operated through a common load resistance which feeds the compound follower. The output from the follower provides pulses of approximately 100 microseconds duration to the input of the Rate Meter Unit.

Figures 3 and 4 show, respectively, the top and bottom view of the Radiation Detection Unit. These figures are marked in detail for correlation with above descriptions and with Figure 5, the circuit diagram of the Radiation Detection or Input Unit.

Counting Rate Meter Unit

The Dual-Channel Counting Rate Meter Unit, shown in block diagram as part of Figure 1 and in circuit diagram by Figure 6, contains an input amplifier differentiator (tube V101A) which controls pulse length and input level. The time constant of the input circuit, about 2 microseconds, is not changed by the 100K-ohm potentiometer, which provides the signal level adjustment. This small time constant controls pulse length by differentiating the 100-microsecond pulses from the Radiation Detection Unit.

The positive pulse output of tube V101A, consisting of single amplitude non-coincident pulses and double amplitude coincident pulses, feeds two channels: the (T-C) channel and the (C) channel. The (T-C) channel consists of tubes V102A, V103, V105, V107, and V108A, while the (C) channel employs tubes V102B, V104, V106, and V108B. Tubes V102A and V102B operate as keyers which trigger the one-shot multivibrator tubes V103 and V104. Separation of the input pulses for the (T-C) and (C) channels is accomplished by adjusting the (C) channel keyer to trigger on the double amplitude coincidence pulses and the (T-C) channel keyer to trigger on the single amplitude non-coincident pulses. Double amplitude coincident pulses will also key to the (T-C) channel but are cancelled out by a mixing process to be described below. These keyers effectively isolate the one-shot multivibrators from tube V101A preventing one-shot multivibrator pulse-width changes with variation of input pulse width or amplitude. This feature of design is important because the integrating circuits, subsequently to be disclosed, will respond to both these factors as well as repetition rate. The keyers and one-shot multivibrators thus act essentially as pulse shapers which prevent any variation in the pulse characteristics supplied to the averaging circuits other than repetition-rate changes. Tubes V103 and V105 are one-shot multivibrators.

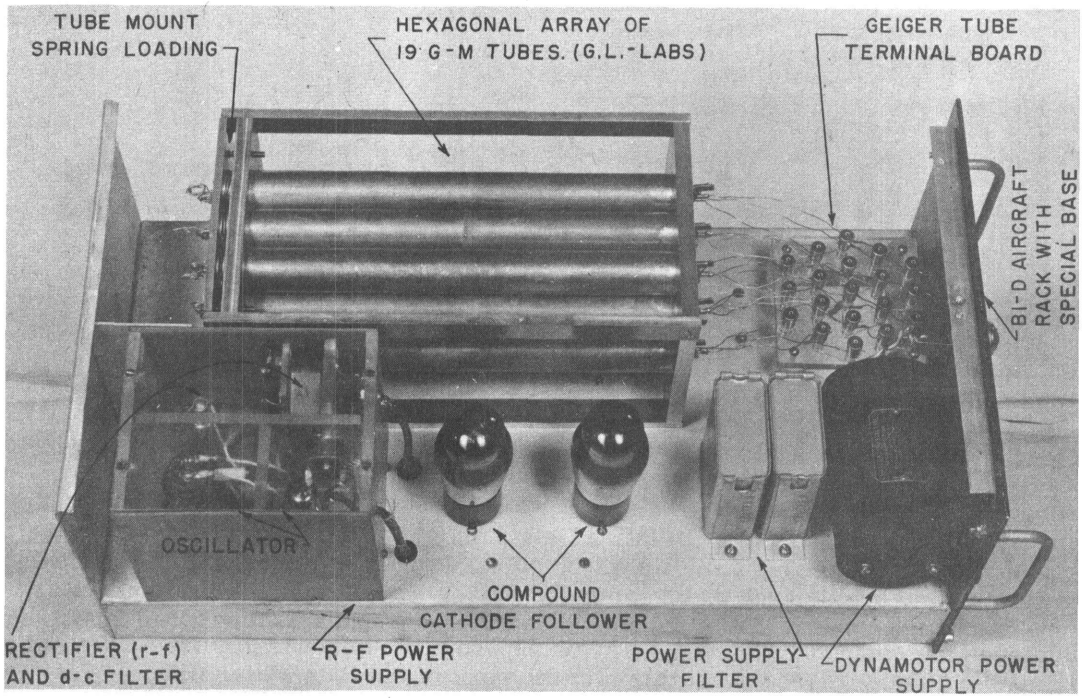

Fig. 3 - Radiation Detector Unit of the Dual-Channel Airborne Equipment Top View With Dust Cover Removed

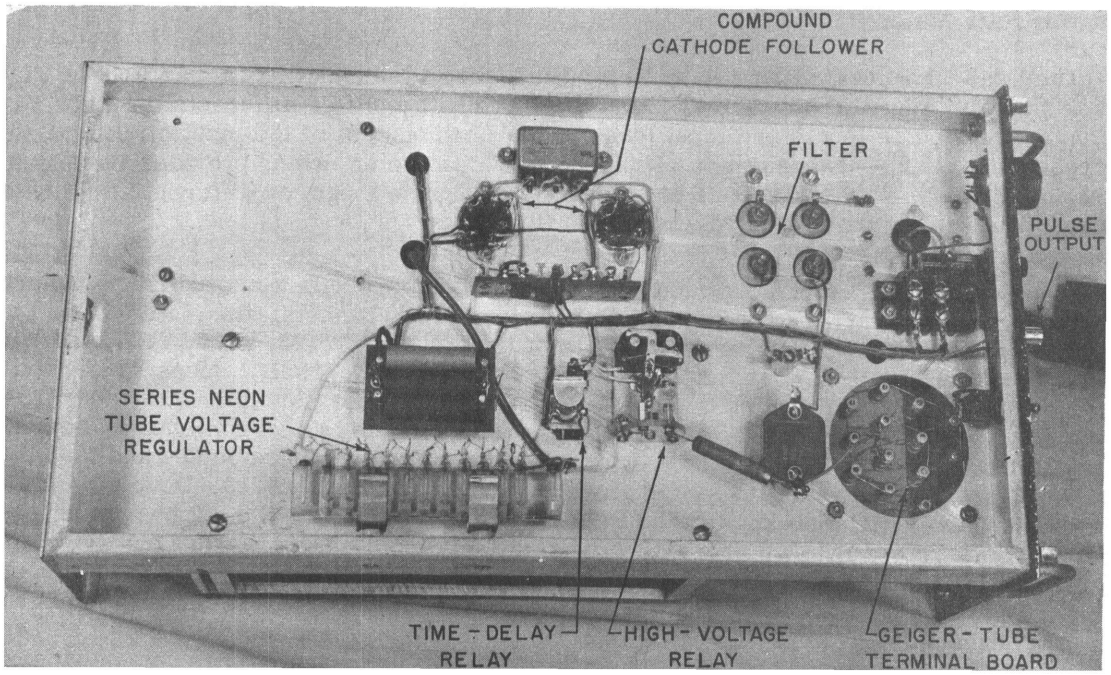

Fig. 4 - Radiation Detector Unit of the Dual-Channel Airborne Equipment Bottom View With Dust Cover Removed

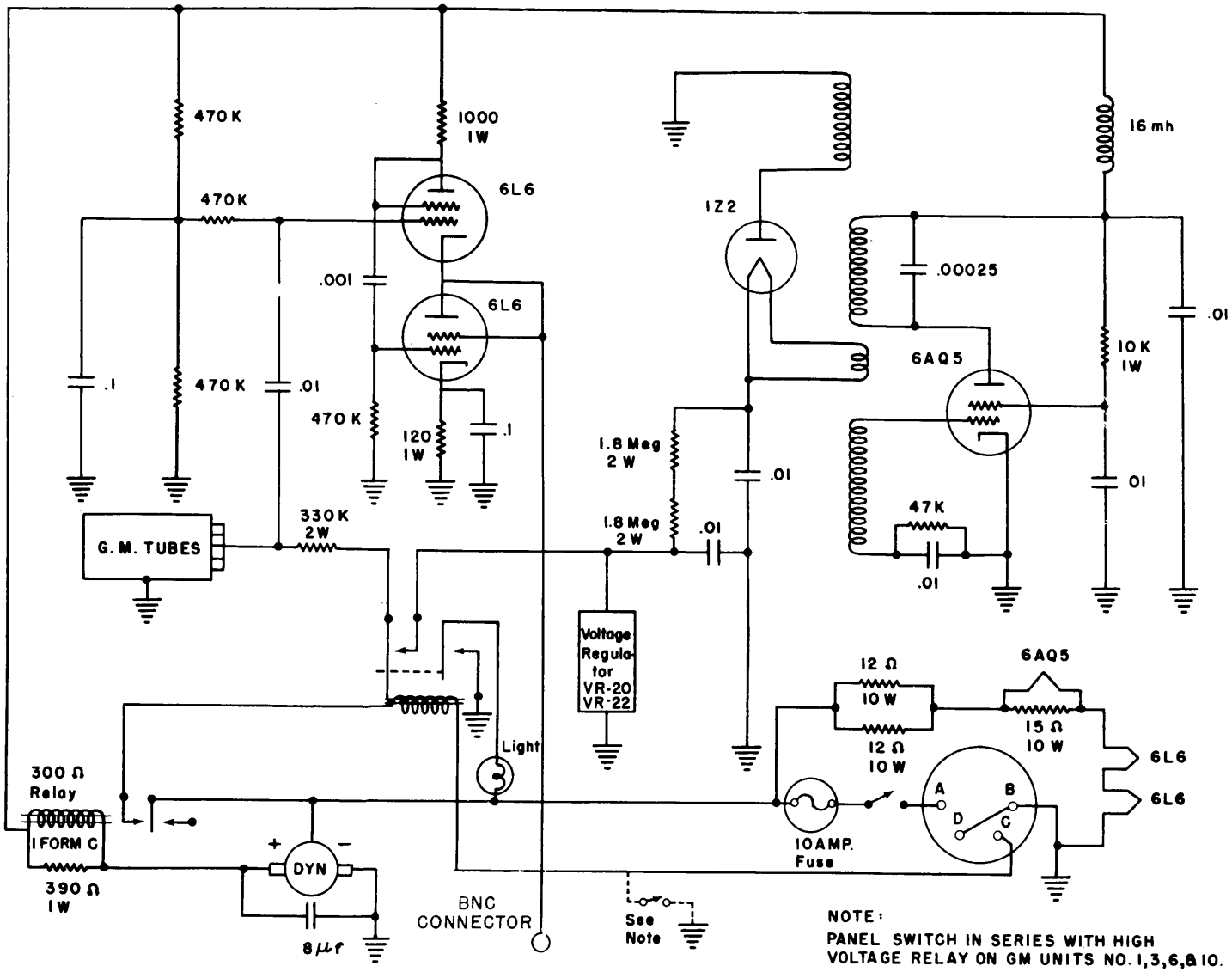

NOTE:

PANEL SWITCH IN SERIES WITH HIGH VOLTAGE RELAY ON GM UNITS NO. 1,3,6,& 10.

ALL OTHER UNITS HAVE SWITCH LEADS BROUGHT OUT ON 4 PRONG CONNECTOR FOR REMOTE SWITCHING BY EA CLOCK MECHANISM.

Fig. 5 - Circuit Diagram of Airborne Radiation Detection Unit
(To be Employed with Dual-Channel Airborne Counting Rate Meter Unit)

This page intentionally left blank.

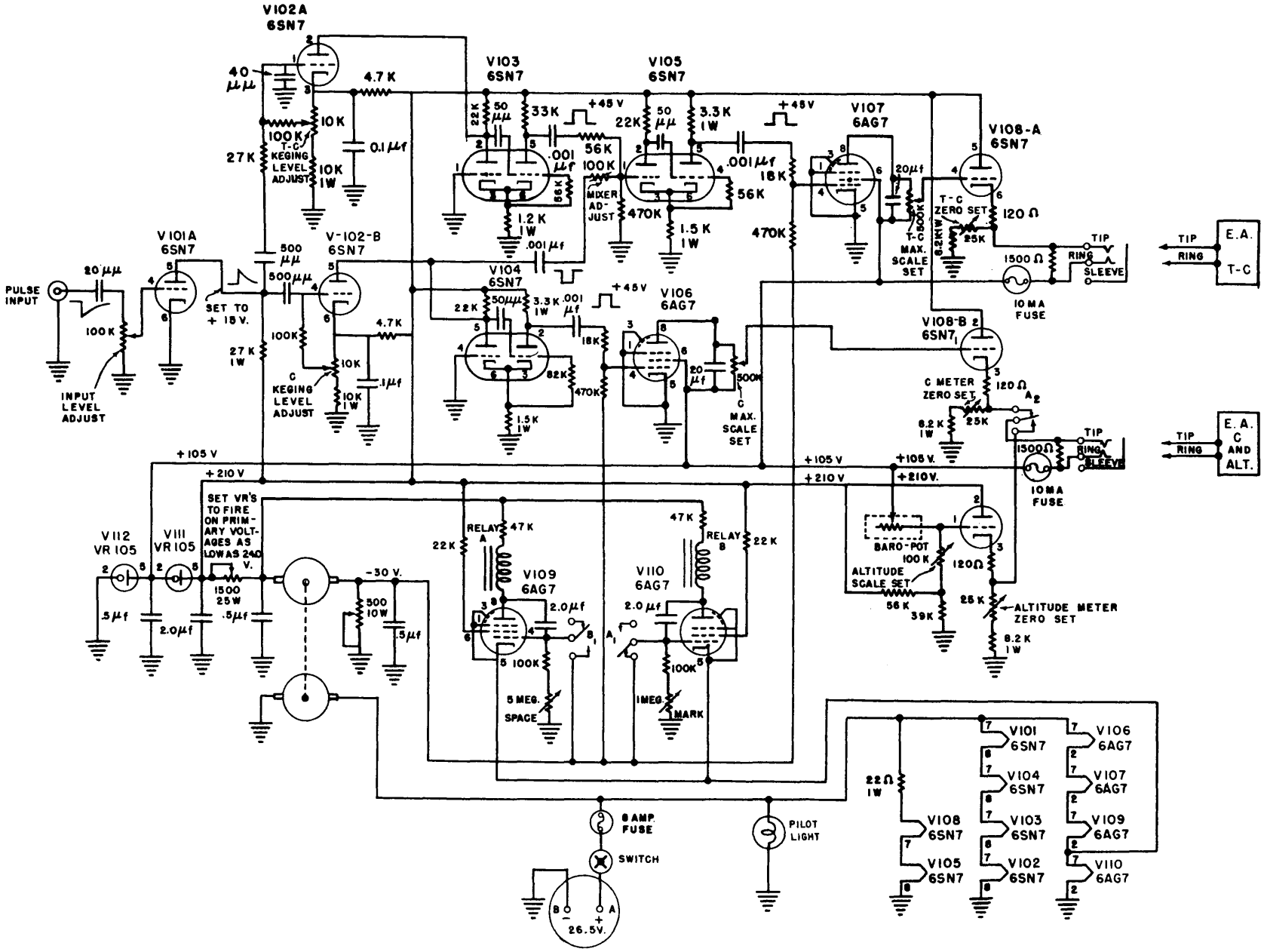

Fig. 6 - Circuit Diagram of Dual-Channel Airborne Counting Rate Meter Unit (To be Used with Radiation Detection Unit)

This page intentionally left blank.

Tube V103 keys on all pulses and acts as a total or (T) stage. Positive pulses are capacitively coupled from V103 to the input of V105. Also coupled through a 100K-ohm potentiometer to the same grid are negative pulses from the (C) channel one-shot multivibrator, tube V104. These positive and negative pulses mix and cancel out at the grid of tube V105 leaving only (T-C) pulses to trigger this stage. Care was used in matching multivibrator pulses so that reliable cancellation was obtained. The (C) channel multivibrator was designed to have a pulse width about one microsecond greater than the (T) stage. This wider pulse insures total cancellation of the positive (T)-stage pulse. The negative remainder from the mixing process does not cause improper operation because tube V105 keys only on positive pulses.

Precaution was taken to align properly the leading edge of the two pulses to be cancelled. Without precaution, the (T) pulse leads the (C) pulse because the (C) channel fires higher on the keying pulse of finite rise time. This difficulty is circumvented by increasing the rise-time of the pulse input fed to the (T) channel by inserting an integrating network consisting of a 27K-ohm resistor and a 40-mmf capacitor between the plate of tube V101A and the grid of V102A. Adjustment of this capacitor permits perfect alignment of the pulses to be cancelled.

With reference still to Figure 6, positive pulse output is coupled from the (T-C) channel tube V105 and the (C) channel tube V104 to the respective integrating circuits, tubes V107 and V106. Each integrating circuit consists of a pentode, biased to four times cutoff, with a 500K-ohm plate-load potentiometer shunted with a 20-mf paper condenser. The 500K-ohm resistance and the 20-mf capacitance form a 10-second RC time-constant network. The grid of tubes V107 and V106 are biased to -30 volts and driven by pulses of over +40 volts. This insures that the grids are securely cut-off in the absence of pulses and driven to zero bias in the presence of pulses. The series grid resistors minimize multivibrator loading. Tubes V107 and V106 were each made a 6AG7 because of its high current capability. The choice of component values for the RC network is a compromise between long time constants, linear operation with repetition rate, and practical component values for airborne use. Capacitance C was made as large as possible, and plate load resistor "R" was compromised between a large value increasing the time constant and a small value extending the circuit's linear operating range. The choice of a value of 500K-ohms results in the circuit being linear to over 400 counts per second.

The 500K-ohm potentiometers permit a portion of the voltage developed in the integrating circuits to be selected without changing the time constant and then to be coupled directly to d-c vacuum tube amplifier tubes V108A and V108B. These latter tubes are biased negatively one volt to insure linear operation. They are non-linear below a bias of -0.5 volt due to a small though uncertain grid current characteristic. The 500K-ohm potentiometers allow full-scale readings of the Esterline-Angus recorders to be set anywhere between 25 to over 400 counts per second. The 25K-ohm potentiometers in the cathodes of tubes V108A and V108B permit the Esterline-Angus recorders to be set to zero in the absence of input signal.

Also included in the Dual-Channel Counting Rate Meter are the circuits which switch the (C) channel recorder to read altitude at regular intervals. The circuits consist of tubes V109, V110, and V101B, a pressure-sensitive element barometer-potentiometer, (baro-pot), and relays A and B. Tubes V109, V110, and the relays perform the switching function. The tubes lengthen the RC time constant by a feedback arrangement. One tube controls the interval or space between altitude readings and the other determines the duration or mark time of the altitude reading. The "space" and "mark" times can be varied to as much as 20 minutes and 5 minutes respectively by adjustment of the "space" and "mark" potentiometers. The voltage developed across the baro-pot is measured by vacuum-tube

voltmeter tube V101B. Here again a "full-scale set" and "zero set" are provided. The full-scale reading can be adjusted to read as high as 40,000 feet, and the deflection as a function of altitude is substantially linear. Where reliable altitude information is obtainable from plane crews, this feature is usually disabled by removing the screen voltage. Also, since this type of altitude indicator is pressure operated, it is not suitable for pressurized cabin work.

A suitable primary power source of the Dual-Channel Counting Rate Meter is a nominal 26.5 volts dc with permissable variation of -2.0 volts + 3.5 volts. All filaments are connected in series-parallel across the 26.5-volt source. The plate supply voltage and the -30 volt bias are obtained from a 26.5-volt dynamotor. The + B voltage to the counter circuits is regulated at +105 volts and +210 volts. The 1500-ohm dropping resistor in the +B bus determines the minimum primary supply voltage at which regulation will commence. It is normally adjusted for a primary voltage of 24.5 volts. This setting also determines the minimum equipment operating voltage, because when voltage regulation ceases, unsatisfactory operation results. The 500-ohm resistance setting in the minus terminal of the dynamotor output determines the value of bias voltage. This voltage should be set to -30 ±5 volts for proper operation of the integration circuits.

Figure 7, the top view of the Dual-Channel Counting Rate Meter Unit, and Figure 8, the bottom view of this unit, show the completed assembly.

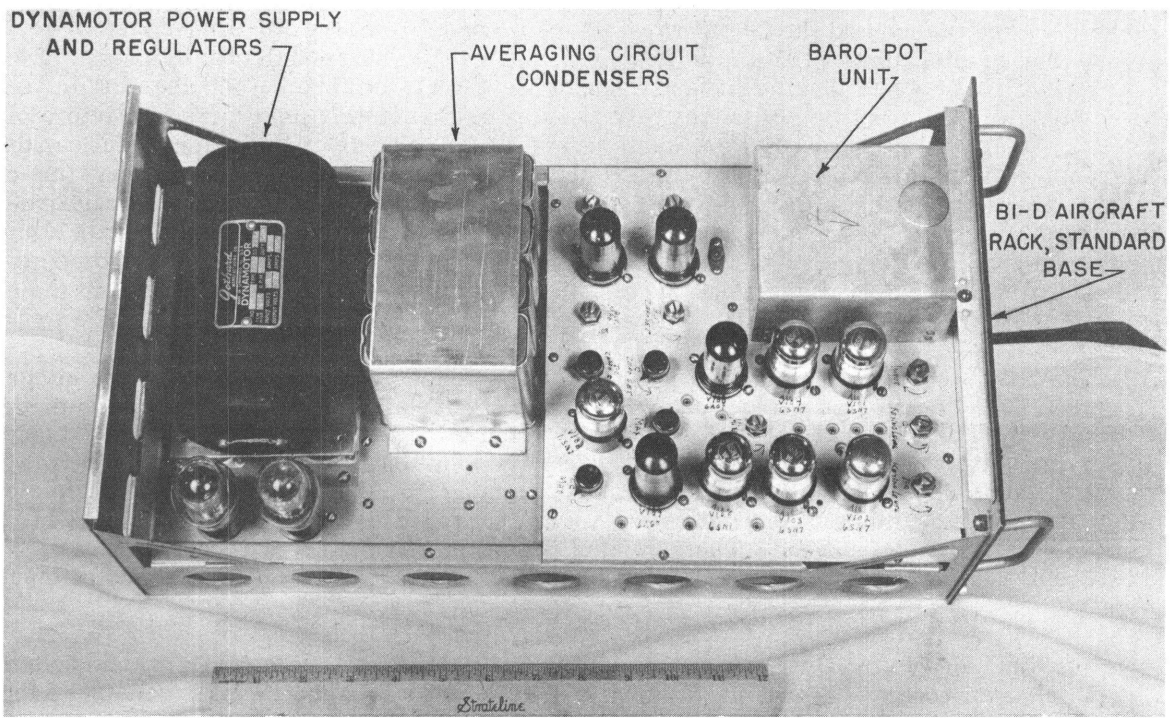

Fig. 7 - Dual-Channel Counting Rate Meter Unit
Top View With Dust Cover Removed

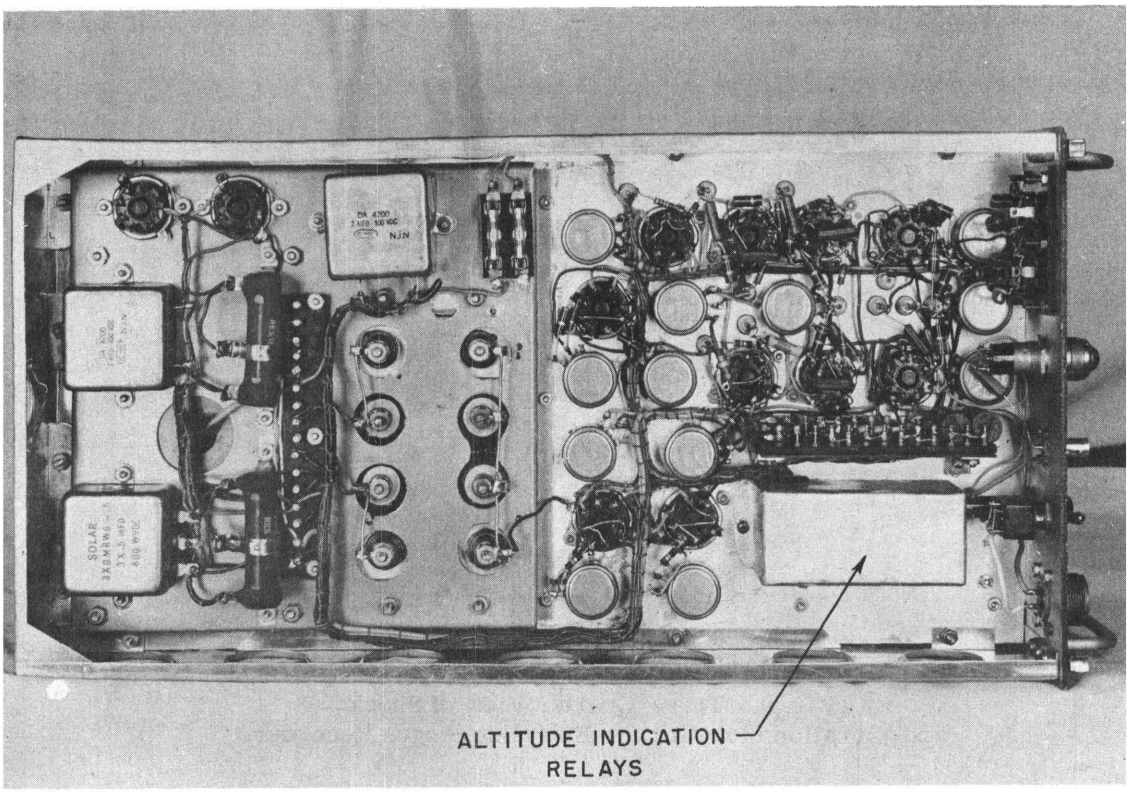

Fig. 8 - Dual-Channel Counting Rate Meter
Bottom View With Dust Cover Removed

SHOCK AND VIBRATION MOUNTING FACILITIES

Both the Radiation Detection Unit and the Rate Meter Unit were assembled in standard aircraft B1-D racks. Therefore, standard aircraft shock mountings were employed with these units.

Vibration and shock mounting of the Esterline-Angus recording meters presented a problem, particularly when it was visualized that the entire equipment would be employed at times in unattended flight. It was known that these recording meters had been installed in aircraft previously for some special work but details of their shock mountings were not available. An attempt was therefore made to design such a mounting and Figures 9, 10, 11, and 12 show a three-point suspension version where the center of gravity of the recorder is below the suspension points and capable of being properly centered. This type of shock and vibration mounting was flight tested and used to obtain airborne data. The addition of sponge rubber fill between each pair of vertical parallels, as shown in these figures, and cross-bracing of the inner vertical members made an especially suitable mounting. These figures, it is believed, present details to those who might have occasion to employ this type of meter for general flight recording purposes.

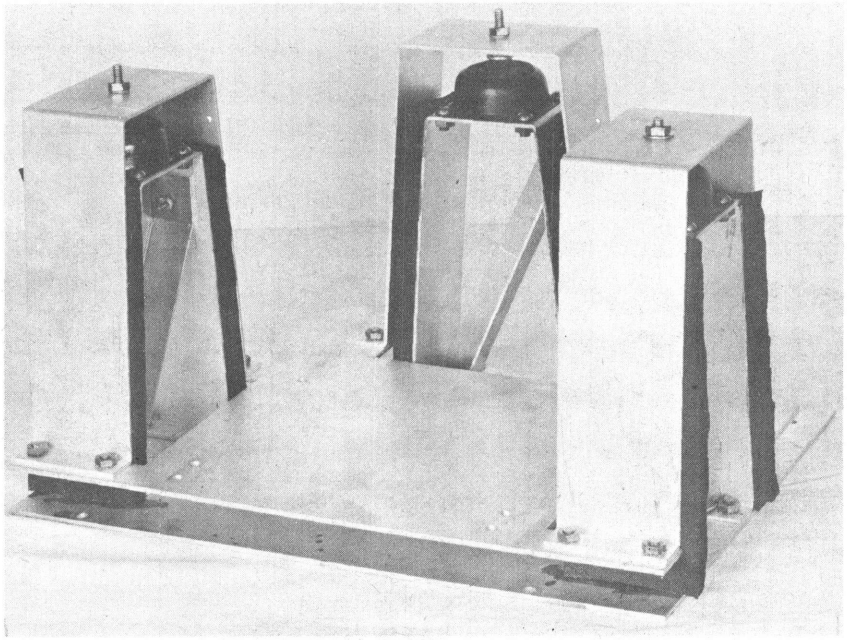

Fig. 9 - Three-Quarter View of Shock
and Vibration Mounting for Esterline-Angus Recorders

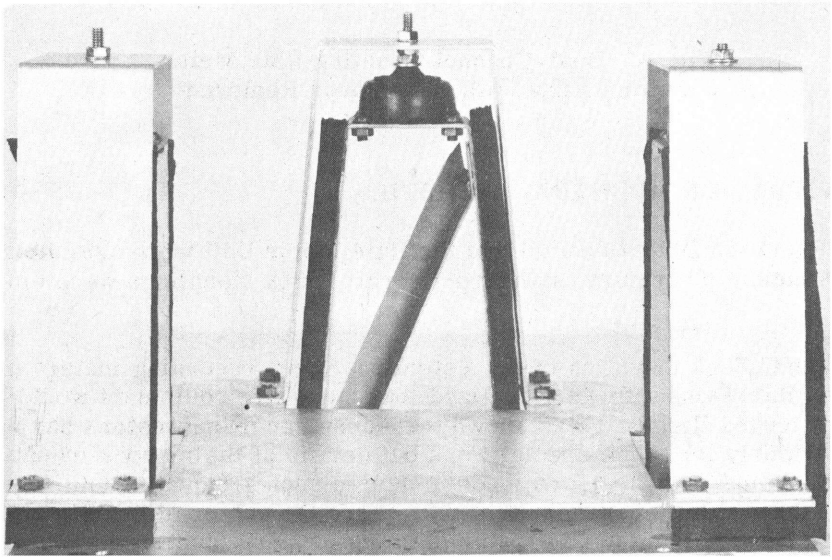

Fig. 10 - Front View of Shock and Vibration Mounting
for Esterline-Angus Recorders Showing Sponge
Rubber Fill and Method of Bracing

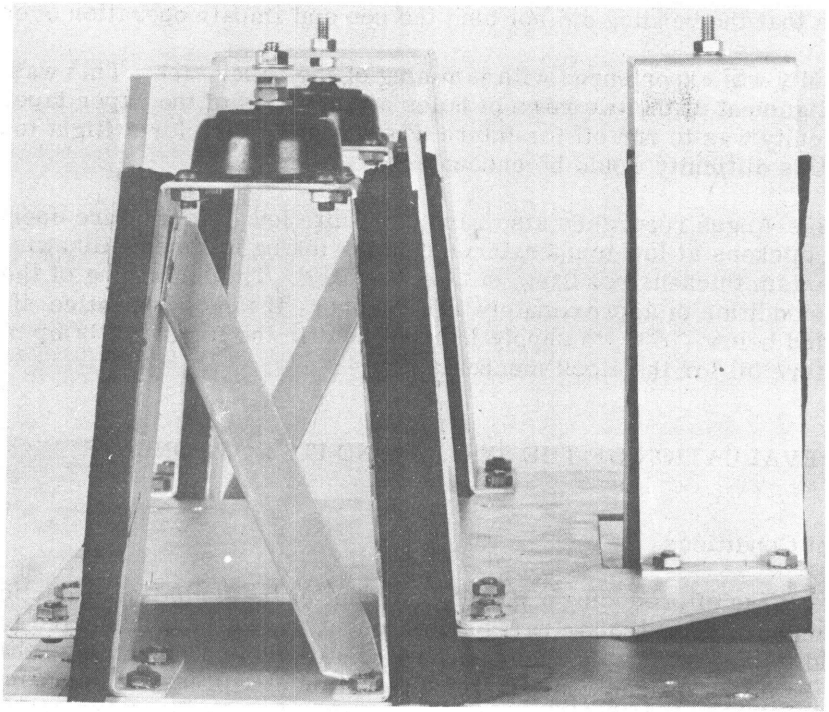

Fig. 11 - Side View of Shock and Vibration Mounting for Esterline-Angus Recorders

ESTERLINE-ANGUS RECORDER ALTERATIONS AND ADJUSTMENTS

One of the recorders was arranged with a clock shaft extension on its left-hand side. This shaft extension carried a cam which actuated a microswitch which in turn energized or de-energized the Geiger-Muller tube bank via relay controls. This alteration is electrically detailed in Figures 1 and 5, but it will not be detailed further because of its simplicity and possible alternate methods of employment.

Due to excessive vibration and maneuvering of the aircraft, some difficulty was experienced in the form of improper inking. This was alleviated by adjusting the pen balance for point-heavy operation. In addition, an alteration of the pen tongue, located at the center of the pen saddle, was made to

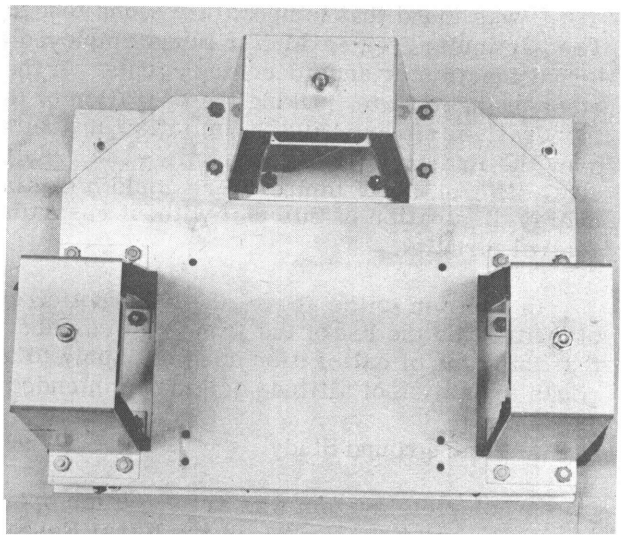

Fig. 12 - Top View of Shock and Vibration Mounting for Esterline-Angus Recorders Showing Recorder Mounting Holes

keep the pen from throwing out. This tongue was bent in the form of a catch, particular care being taken that the bending did not bind the pen and impair operation over the scale.

Some difficulty was experienced with jamming of the paper tape. This was found to be caused by misalignment of the two rows of holes at the edges of the paper tape. One solution of this difficulty was to run off for future use sufficient tape for a flight to ascertain whether or not this difficulty would be encountered.

The Esterline-Angus recorders also have a definite low-temperature operating limitation. The ink thickens at low temperatures causing inking failures. Likewise the oil in the clock mechanism thickens resulting in tape stoppage. The thickening of the ink can be prevented by the addition of approximately 10% alcohol. It is good practice, if the recorders are to be operated below -15°C, to supply internal heat in the form of a lamp bulb or resort to low-temperature oil for the clock mechanism.

LABORATORY EVALUATION OF THE SYSTEM AND ITS COMPONENTS

Simulated Flight Conditions

During the course of producing a prototype model of the Radiation Detection System, the whole assembly or a particular part or component thereof was subjected to severe temperature, humidity, and simulated flight altitude conditions in a sealed test chamber designed for the purpose. In this manner, satisfactory operation at a pressure corresponding to an altitude of 50,000 feet was attained by careful practice of aircraft equipment design principles. These were particularly adhered to with regard to the high-voltage circuits employed and the absence in the design of any extremely high-resistance circuits.

It was found that temperature alone tended to limit the operating altitude of this system. The particular Geiger-Muller tubes employed contained argon gas and diethyl ether as internal functioning and quenching agents. In the temperature range -30° to -40° C the diethyl ether changes state, making the operation of the Radiation Detection Unit erratic or totally inoperative. To combat this limitation, measurements were made with a 10-oz canvas cover over the Radiation Detection Unit. The results of these measurements indicated that a 50° C differential in temperature could be maintained due to the confinement of the inherent energy dissipation of this unit without resorting to the use of additional heaters and heater control circuits.

In addition to the above, the baro-pot circuits were adjusted and calibrated as a function of altitude by the use of the same test chamber flight simulation equipment. It is appreciated that this type of calibration does not apply to all flight conditions but it is suitable for the rough indication of altitude originally intended.

Cosmic Background Study

A complete system was arranged for operation in Room 31 on the second floor of a two-story building, No. 24, of the Naval Research Laboratory. The roof immediately above the Radiation Detection System in this location is of wood construction covered with thin sheet metal which has an overlay of slag and tar. The side walls of the room are of hollow tile and brick masonry construction.

With the system arranged for operation at the floor level in the foregoing surroundings, the background cosmic count (Co) was found to go through its usual small fluctuation with

time averaging approximately 4.7 counts per second over long periods. Upon placing the Radiation Detection Unit of the system outside the room on a flat roof on the same level as the floor of Room 31 but near a large steel radio tower, cosmic count (Co) over a long period increased to an average of 5.45 counts per second. The Radiation Detection Unit was then placed on a wooden frame three feet off the roof and immediately above Room 31. In this position (Co) was approximately 8 counts per second with a corresponding (T-C) channel reading of approximately 20 counts per second over long periods.

The above mentioned variations in the cosmic count (Co) indicate the expected performance upon consideration of the following: (a) the hemispheric integrating properties of such an array, (b) the relative positions of the hexagonal array with respect to the surroundings, and (c) the nature of the surroundings.

Resolving-Time Study

The adjusted pulse lengths of the three one-shot multivibrator units (Figure 6) averaged approximately 5 microseconds, ranging from 4 to 6 microseconds in the 12 units produced. From this information and a knowledge of the tailing of the input pulses, it can be estimated that the resolving time of the subject design is, to a degree, a function of the counting rate at high rates. The measured resolving time was generally found to be in the range of 5 to 8 microseconds for designed counting rates.

Detailed resolving-time studies were made at a number of counting rates with a radium source placed such as to excite the hexagonal Geiger-Muller tube array in a broadside manner (Figure 13). Measurements were also made with and without copper and lead shielding of the radium source to limit the nature of excitation. It is not pertinent in this report to

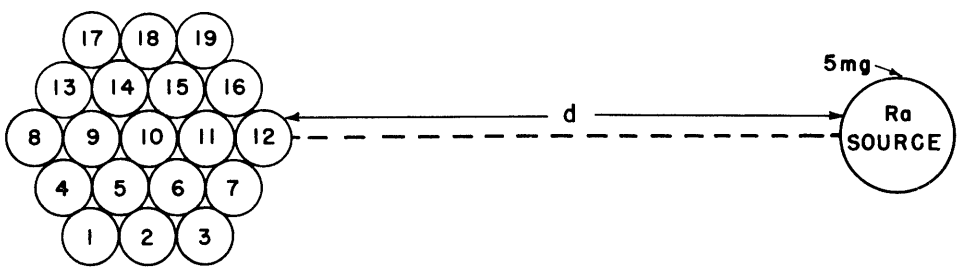

Fig. 13 - Hexagonal Array of Geiger-Muller Tubes and Radium Source Placement

detail all these studies,therefore only representative data is presented to assist the reader in interpreting subsequent statements on the resolving time.

With the radium source arranged as in Figure 13, numerous coincidence channel measurements with a number of equipments were made to study equipment performance and Geiger-Muller tube life as a function of counting rate. If one considers the counts-per-tube in the hexagonal array to be substantially uniform and three-fold accidental coincidence of secondary importance, the coincidence channel count will be:

$$(C) = Co + A, \qquad (1)$$

where, in accordance with Appendix A,

$$A = n^2 p(p-1) T,$$

and

n = the average count per tube,
p = the number of tubes in this array,
T = the resolving time.

Thus:

$$(C) = Co + n^2 p\,(p-1)\;T;$$

and for the particular array in question,

$$(C) = Co + 342\,n^2\,T,$$

from which

$$T = \frac{(C) - Co}{342\,n^2} \qquad (2)$$

Many detailed and laborious measurements were carried out with the arrangement of Figure 13 for a study of the variation in n over the array. Values of n for each tube in the array and sample calculations of T are shown in Table I. Observed values of n and calculated values of T, both as functions of d (Figure 13), are shown in Table II. In these instances it might also be considered appropriate to employ the relation

$$T = \frac{(C) - Co}{S^2 - s^2} \qquad (3)$$

where

$$S^2 = \left(\sum_{1}^{19} m_k\right)^2$$

and

$$s^2 = \sum_{1}^{19} n_k^{\,2}$$

As an example of a comparison between equations (2) and (3), some representative observed and calculated data on the resolving time are shown in Table I. Note in this example that the numerical difference between equations (2) and (3) is of no consequence.

Table II tabulates the results of some observed and calculated data with the distance d (Figure 13) as a variable. It should be mentioned that the time over which n was determined was large compared with the time constant (10 seconds) of the averaging circuits in the Counting Rate Meter Unit. Note also in these data that (C-Co) is in some instances suspect, since this difference operation should be avoided when the difference is not sufficient. High counting rates due to the radium source two meters or less from the Geiger-Muller tube bank caused more than ordinary Geiger-Muller tube failure in the form of slow entry into a continuous discharge state. This fact made the determination of reliable data a lengthy process, especially in those instances of Geiger-Muller tube failure which could be classed as temporary, because a removal of excitation with subsequent reapplication did not immediately repeat the unwanted discharge condition.

TABLE I

Value of (n) as a Function of Geiger-Muller Tube Number (Figure 13) and Sample Calculations of Resolving Time

Geiger Tube No. (Figure 13)	n counts/sec	n^2	$\bar{n}$ $\bar{n} = \frac{1}{19}(\Sigma_1^{19} n_k)$	$\bar{n}^2$	S'^2 $S^2 = (\Sigma_1^{19} n_k)^2$	s^2 $s^2 = \Sigma_1^{19} n_k^2$	T	Co	C
1	100	10,000	107.1	11,470	4,137,970	222.484		4.9	39.7
2	115	13,225							
3	128.5	16,512							
4	87	7,569							
5	96.5	9,312							
6	106	11,236							
7	127	16,129							
8	81	6,561							
9	89	7,921							
10	99	9,801							
11	111.5	12,432							
12	137	18,769							
13	89	7,921							
14	98.7	9,741							
15	111	12,321							
16	130	16,900							
17	99	9,801							
18	107	11,449							
19	122	14,884							
Σ	2,034.2	222,484							

Sample Calculations of Resolving Time

$$T_1 = \frac{(C) - Co}{S^2 - s^2} = \frac{34.8}{3,915,486} = 8{\cdot}88\ \mu s.$$

$$T_2 = \frac{(C) - Co}{342\ n^2} = \frac{34.8}{3,922,740} = 8{\cdot}87\ \mu s.$$

TABLE II

Observed Values of (n) and Calculated Values of (T), Both as a Function of (d) (Figure 13)

d,(Figure 13) in (Meters)	n (counts/sec)	n^2	C	Co	(C - Co)	$T = \frac{(C) - Co}{n^2 342}$ (μ sec)	Remarks
1							
2	177	31,400	46	5.4	40.6	3.8×10^{-6}	
3	87.9	7,726	18.5	5.1	13.4	5.08×10^{-6}	
4	46.2	2,140	11	5.4	5.6	7.68×10^{-6}	
5	30.8	950	8	5.4	2.6	8.0×10^{-6}	
6	23.2	537	7	5.4	1.6	8.3×10^{-6}	(C)-Co not
7	17.4	304	6	5.4	0.6	5.8×10^{-6}	necessarily
8	9.3	86	5.5	5.4	0.1	3.4×10^{-6}	reliable

Companion data relating to resolving time is set forth by Table III. This data was obtained by observation of the (T-C) channel output pulse waveforms. A dual-pulse generator was coupled to the Counting Rate Meter and a situation set up whereby one pulse was made to approach coincidence and travel through another pulse, doubling the amplitude at the time of travel-through. This figure shows that for pulse separations greater than 4 to 6 microseconds, both pulses will appear in the (T-C) channel output. When the pulses approach closer than this value one pulse drops out. When the five-microsecond pulse approach coincidence within two microseconds both pulses disappear., The data also indicates that the same time conditions exist with reversed pulses and that stable mixing results over a wide change in input amplitude.

Resolving time may be defined as the minimum time separation that can exist between two pulses before they both disappear due to coincidence cancellation. From the average magnitudes, Table III, T = 2 + 5/2 or 4.5 microseconds.

FLIGHT EVALUATION

All twelve of the subject equipments were flight tested in unattended and attended flights in AD-1, JD-1, and B-29 type aircraft. The AD-1 and JD-1 flights were of an unattended nature and made with the cooperation and facilities of Naval Air Stations, Patuxent, Maryland, and Anacostia, D. C. The B-29 test flights were made at Andrews Field, Maryland with the cooperation of the Air Weather Services, Air Forces.

Altitude and latitude variations in the readings of the (C) and (T-C) channels are previous knowledge to some readers. Of particular interest in the subject flight evaluations,

apart from the correct operation of the equipment under severe vibration conditions, were the channel readings as a function of altitude from the standpoint of the background information to be obtained therefrom. The absolute magnitude of the channel readings is a function of the radioactive background or contributors thereto, i.e., altitude, latitude, and the disposition and shielding of the Geiger-Muller tube bank within the aircraft. Thus

TABLE III

Data for Calculation of Resolving-Time*

Pulse Amplitude (Pulse #1) (volts)	Pulse Amplitude (Pulse # 2) (volts)	t Microseconds - one #2 Pulse #1 t	t Microseconds - one #2 Pulse #1 t	No Pulse μs
10	10.	5	6	1
12.5	12.5	4	4	3
15	15	4	4	3
17.5	17.5	4	5	2
19	19	6	6	1

*Notes: 1. Pulse time t of columns (3), (4), and (5) were measured on second plate of the (T-C) one-shot multivibrator.

2. In columns (3) and (4) two pulses occur when separated by more than the values shown.

with the equipment in operation in an aircraft on the ground, the (T-C) channel reading under normal conditions can be considered as contributed to by the ground, the radioactive background of the aircraft caused by radiolite instruments, controls and contamination, and some function of the coincident count (C) such that:[1]

$$(T-C) = Bo + B + k(C) \qquad (4)$$

where

Bo = ground contribution,

B = aircraft and installation contribution,

(C) = coincident count, and

k = slope constant.

Numerous step-altitude flights were made, with data usually taken at 5,000, 10,000, and every 2,500 feet thereafter up to a predetermined ceiling, at Naval Air Station, Anacostia, D. C., Naval Air Station, Patuxent, Maryland, and other locations.

Reliable representative data from two locations is herewith presented by Figures 14 and 15 plotted in the form (T-C) versus (C). In this manner, altitude does not enter into the plot, except that the corresponding numerical figures were obtained at the altitudes noted and a hypothetical physical position for the aircraft at some negative altitude corresponding to (C) count zero is generated by extrapolation.

Expression (4) is related to Figures 14 and 15 because, generally speaking, all points fall upon a straight line of slope constant, k. These lines of constant slope intercept the (T-C) axis in a positive manner at zero (C) count. This intercept is B in equation (4) and the experimental plot of all data would intercept at this point were it not for Bo. At this juncture, it is noted that k, the ratio (T-C)/(C), is the slope of the straight line with intercept B. With a knowledge of k, B, and the ground count (C), the Bo contributed by the ground can be obtained.

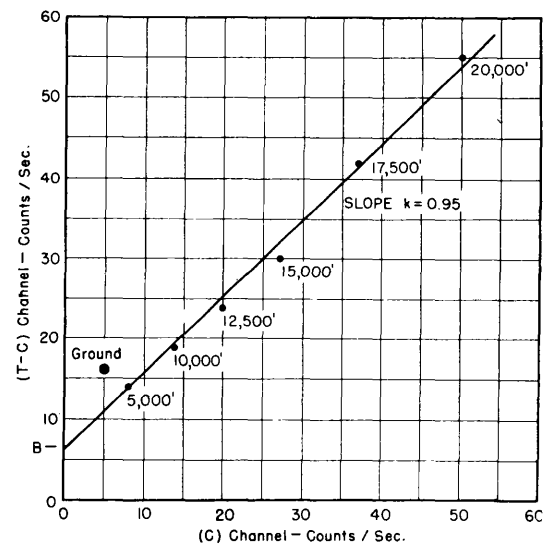

Fig. 14 - Step-Altitude Data, Local Flight Naval Air Station, Patuxent, Maryland

The magnitudes of the k's and B's of Figures 14 and 15 should be noted. It need not be elaborated upon that the radioactive ingredients in instrument dials, control switches,

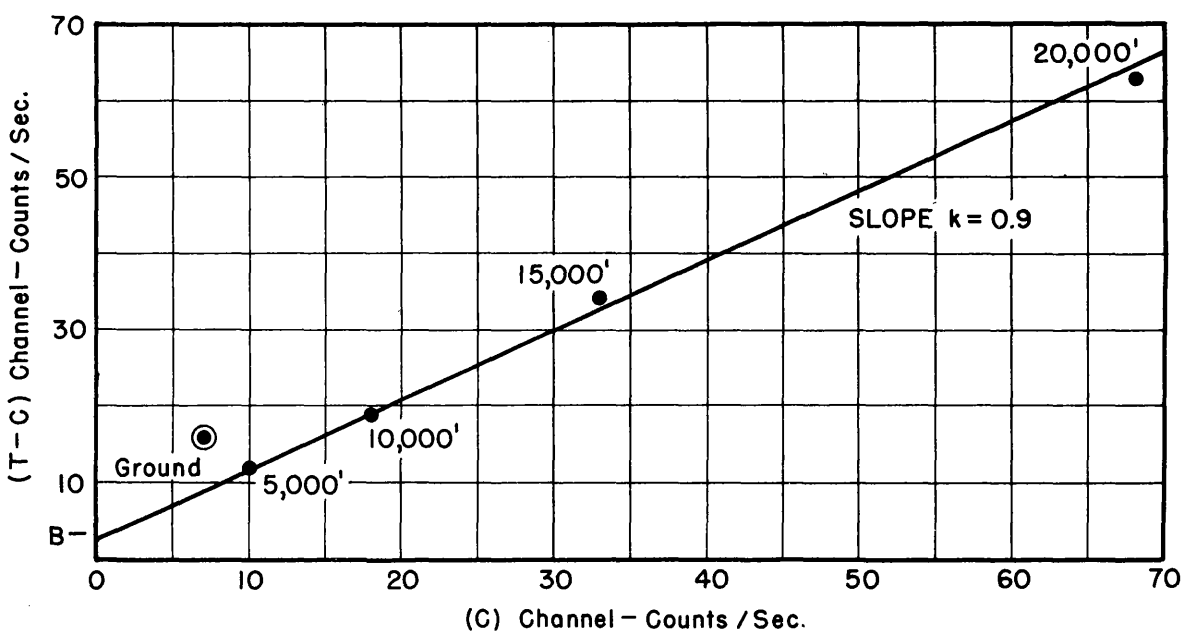

Fig. 15 - Step-Altitude Data, Local Flight Andrew's Field, Maryland, Air Forces Facilities

oxygen systems, and general contamination determine the value of B along with the disposition of the Geiger-Muller bank with respect to these sources.

FLIGHT DATA

Representative Data

Figures 16 and 17 constitute representative flight data taken in JD-1 type aircraft in the direction noted thereon. None of these figures shows the full flight period data. Instead, the climb-to-altitude portion, a representative constant altitude portion, and the let-down period are depicted. The electrical zero-level checking facilities of both channels, actuated by the cam operated microswitch, are shown to be acting in all three portions of each flight shown. It is also pointed out that the altitude measuring feature, described previously as an interruption of the (C) channel for purposes of introducing "altitude pips," was made inactive during these flights since the pilot's log information was considered very satis - factory for the purpose.

TABLE IV

Data Analysis Work Sheet

Entry No.	C Interval Averages	(T-C) Interval Averages	ΔC	$\Delta(T-C)$	$\frac{(T-C)}{(C)}$	$\Delta\frac{(T-C)}{(C)}$	Altitude	Position	Time
1									
2									
3									
4									
.									
.									
.									
n									
Means	$\Sigma C/n$	$\Sigma(T-C)/n$	$\Sigma\Delta C/n$	$\frac{\Sigma\Delta(T-C)}{n}$	$\frac{\Sigma\left(\frac{T-C}{C}\right)}{n}$	$\frac{\Sigma\Delta\left(\frac{T-C}{C}\right)}{n}$			

Analysis of Data

The flight data taken by this type of equipment is properly analyzed in the following manner. The (C) and (T-C) records, such as Figures 16 and 17, are read at intervals and an average of the interval amplitudes taken. These averages are then tabulated, Table IV as a function of corresponding altitude, time, and position. The averages of (C) and (T-C) are calculated as well as deviations from the means, ΔC and $\Delta(T-C)$. To assist in determining the reliability of the individual interval readings (C) and (T-C), the averages of ΔC and $\Delta(T-C)$ are also calculated. The ratio (T-C)/(C), as well as its fluc- tuations, are also tabulated and should, according to Figures 14 and 15, be independent of small changes in altitude.

MAINTENANCE AND OPERATION OF SYSTEM

Details on the maintenance and operation of the Radiation Detection System de- scribed in this report are presented in Naval Research Laboratory Letter Report

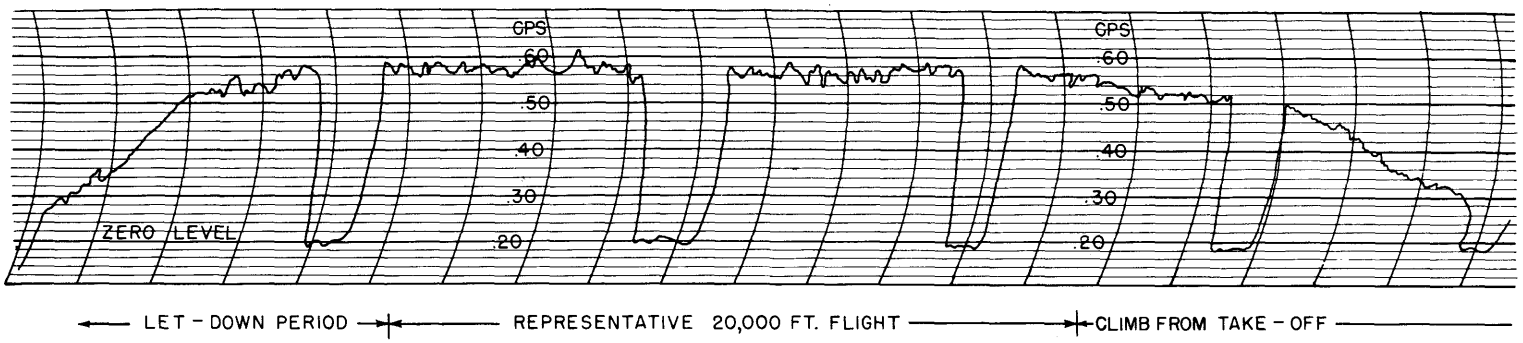

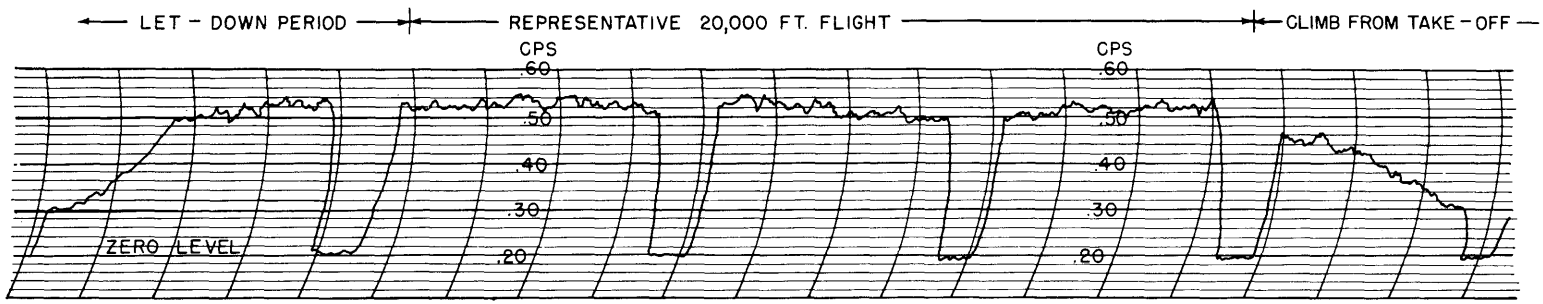

Fig. 16 - Representative North Flight Data JD-1 Aircraft, Dual-Channel System No. 12

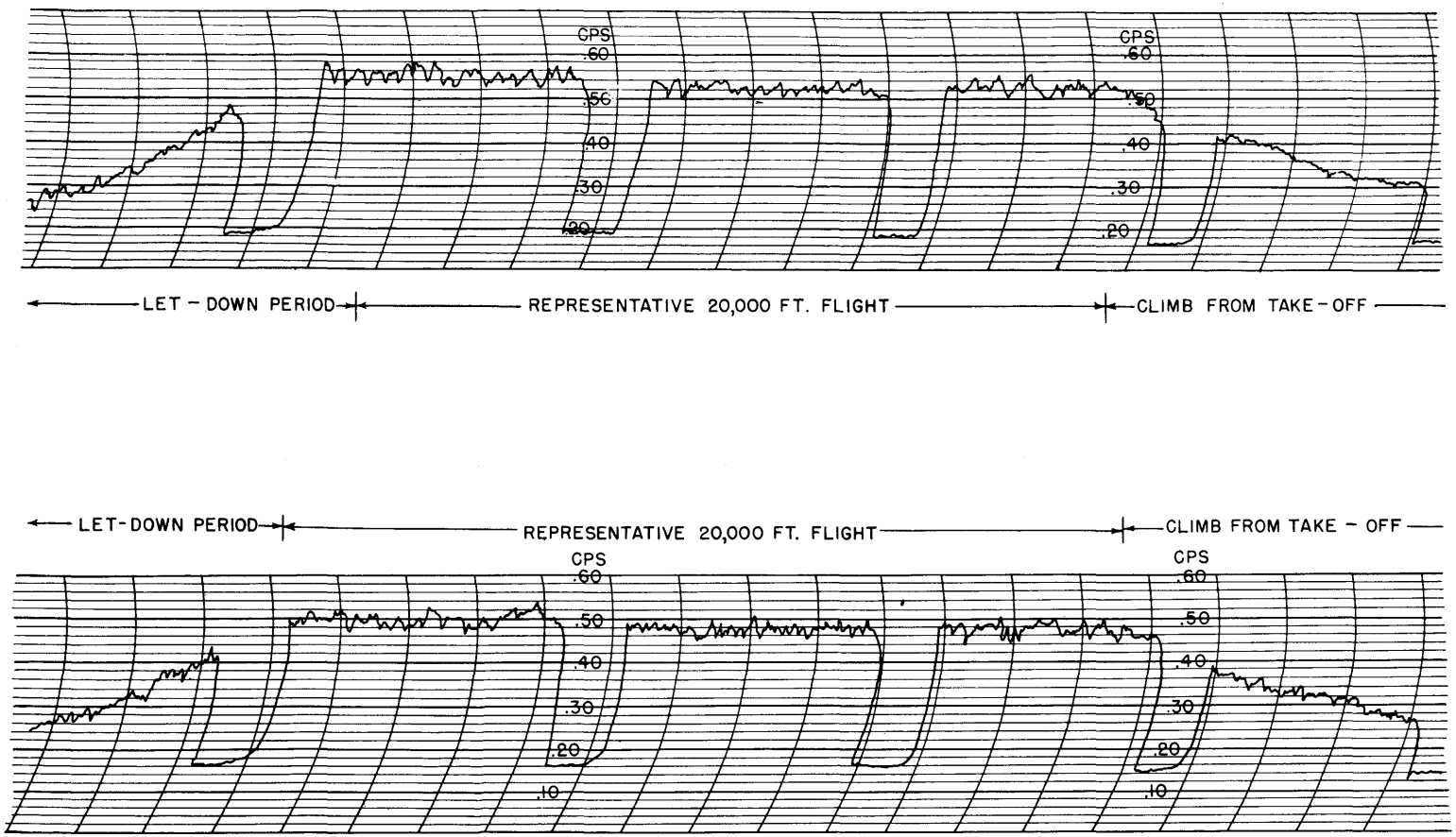

Fig. 17 - Representative South Flight Data From Same Location Figure 16, JD-1 Aircraft, Dual-Channel System No. 8

C-3600-536A/48(jfb) entitled "Operation and Maintenance Instructions on the Dual Channel Radiation Detector".

CONCLUSIONS AND RECOMMENDATIONS

It is concluded on the basis of flight use that this equipment is operationally satisfactory and that relatively instantaneous variations in $\Delta(T-C)/(C)$ serve to detect changes in gamma radiation.

Future development of this type of equipment should be made around more reliable and more sensitive Geiger-Muller tubes. Also, with different vacuum tubes, the one-shot multivibrator units could be reworked for operation at pulse lengths of the order of one microsecond. The latter, in conjunction with more severe differentiation of the Geiger-Muller tube pulses in the input circuit to theDual-Channel Rate Meter, would allow a smaller resolving time to be obtained.

The subject design contains three one-shot multivibrators responding to (C), (T-C), and (T). Printed data (numerical) as a function of time could be arranged as a substitute for, or in conjunction with, the inking type recorders described as part of this equipment.

The twelve units of the equipment described herein were produced on a crash development and production basis. The Radiation Detection Unit weighs 30 pounds, the Dual Channel Rate Meter weighs 30 pounds, and the Esterline-Angus Recorders weighs 40 pounds each. In the interest of weight and size reduction, it is known that miniaturization would aid, and it is recommended.

ACKNOWLEDGMENT

The Naval Research Laboratory acknowledges the material aid and assistance of the Naval Air Test Center, Patuxent, Maryland; Naval Air Station, Anacostia, D. C.; Comairlant, Comairpac , and the commanding officers and personnel of the Utility Squadrons who flight tested the subject equipment. The cooperation of the Air Weather Service, Air Forces, is also acknowledged for their part in supplying B-29 flight facilities. The authors also acknowledge the expert guidance and encouragement of Commander C. H. S. Murphy, Senior Program Officer, Naval Research Laboratory and Drs. B. Salzberg and M. H. Johnson of Radio Division I and Nucleonics Division, respectively. Mention should be made of the contributions of Dr. H. Friedman, Optics Division, in suggesting the hexagonal array and its relation to amplitude separation. In addition, the cooperation of all members of the Special Research Section, Radio Division III, is of special mention and in particular the work of Mr. G. D. Morehouse for designing and producing the Radiation Detection Unit.

* * *

APPENDIX A*

TWO-FOLD ACCIDENTALS

Assume that there are p counters in a detection unit arranged so that the simultaneous triggering of two or more of these counters by one ionizing event is registered as a coincidence.

The arrangement may be illustrated diagramatically as shown in Figure 18. In this figure each counter is connected to a separate relay. When a counter is actuated by an ionizing event, a pulse of current is delivered to the relay. This pulse causes the relay contact to close for a short interval of time, thus completing the circuit r, V, R, and resulting in a pulse of voltage v across the resistance R. If $r \gg R$, the voltage across R will be approximately VR/r. If any two of the counters of Figure 18 are actuated simultaneously by an ionizing agent, this value of voltage v will be doubled. If m of the counters are actuated simultaneously by an ionizing event, the pulse of voltage across R will then be VRm/r. When $m = 2$, a two-fold coincidence is said to have occurred. When $m = 3$, a three-fold coincidence is said to have occurred, and so on.

DEFINITION OF ACCIDENTALS

A recording means, not shown in Figure 18, may be assumed to be connected across R and arranged to record a coincidence event whenever the pulse voltage v is equal to or exceeds twice the voltage which would be caused by the closing of one of the relay contacts.

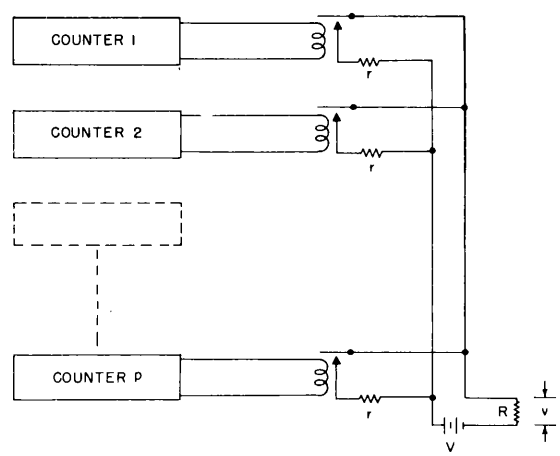

Fig. 18 - (n) Counter Simulator

When one of the counters is triggered by an ionizing event, it delivers a pulse of current to the relay to which it is connected causing the relay contacts to close for a very short but nevertheless finite time. If at some instant during this very short period another counter happens to be triggered by an altogether independent ionizing event, the voltage v across R will be doubled throughout the time interval during which both relays are closed in a manner shown by Figure 19. If it is assumed that the recorder will register the voltage 2v, even if the two sets of relay contacts are both closed for a time shorter than t_1 as shown by Figure 19, it will appear to an observer as if a two-fold coincidence took place. Actually,

---

* This appendix is the work of Drs. B. Salzberg and M. H. Johnson, Naval Research Laboratory. It is expected that this treatment along with other related work will be the subject of a separate report by these authors to be released at a later date.

there was no real coincidence, but because of the finite time that each of the relay contacts remained closed, the recorder registered an equivalent two-fold coincidence. Such an apparent coincidence is termed a two-fold accidental. In exactly the same manner, it is possible to get a three-fold accidental, a four-fold accidental, and so on.

TWO-FOLD ACCIDENTALS

Counter 1, Figure 18 is triggered on the average of n times a second. The ionizing events which trigger the counter occur at random, merely being the long-time average occurrence of the events. The relay contacts associated with counter 1 remain closed for a time interval t_1, once a pulse has occurred. The product $n_1 t_1$, is considered much less than unity; this makes it very unlikely that two or more pulses will occur while the relay contacts happen to be closed. The corresponding quantities for counter 2 are n_2 and t_2, and for counter p they are n_p and t_p. For each of these $nt \ll 1$.

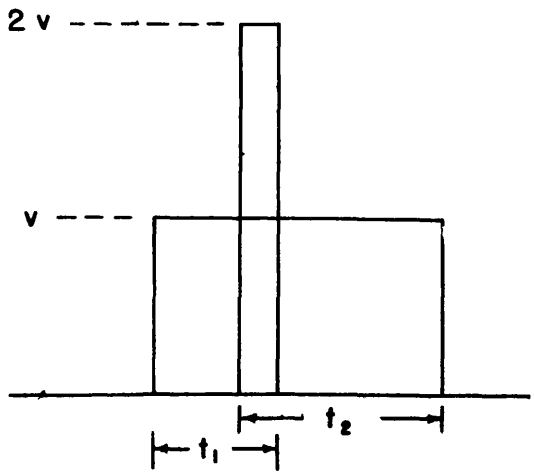

Fig. 19 - Pulse Plot

In one second the relay contacts associated with counter 1 remain closed for a total time $n_1 t_1$. Then since counters 2 to p are triggered at the average rates n_2 to n_p, the partial probable number of two-fold accidentals occurring while relay 1 contacts are closed is $n_1 t_1 \cdot (n_2 + m_3 - - - - - + n_p)$. Using the same reasoning with respect to the fraction of a second during which each of the relay contacts, 2 through p, remain closed, one finds that the total probable rate of occurrence of two-fold accidentals is

$$\begin{aligned} A_2 = {} & n\, t_1 \cdot (0 + n_2 + n_3 + n_4 + - - - - - + n_p) \\ & + n_2\, t_2 \cdot (n_1 + 0 + n_3 + - - - - - - + n_p) \\ & + - - - - - \\ & + n_p t_p \cdot (n_1 + m_2 + n_3 + - - - - - - + 0) \end{aligned} \quad (5)$$

If $t_1 = t_2 = - - - - t_p = t$, expression (5) becomes

$$A_2 = t \cdot \left[2n_1 (n_2 + n_3 + - - - - + np) + 2n_2 (n_3 + n_4 + - - - - + n_p) + 2n_{p-1}\, n_p\right]$$

$$= t \cdot \left[\left(\sum_{i=1}^{p} ni\right)^2 - \sum_{i=1}^{p} ni^2\right] \quad (6)$$

If $n_1 = n_2 = - - - - - = n_p = n$ as well, expression (6) becomes

$$A_2 = t \cdot \left[p^2\, n^2 - pn^2\right] = p\,(p - 1)\, n^2\, t \quad (7)$$

If only $n_1 = n_2 = - - - - = n_p = n$, the t's remaining different, in general, expression (5) becomes

$$A_2 = (p - 1)\, n^2 \sum_{i=1}^{p} ti \quad (8)$$

* * *

PRNC-8656-12-27-48-125