NRL Report 7610

Understanding and Optimizing Multiple Side-Lobe Canceler Operation

BERNARD L. LEWIS AND JAMES P. HANSEN

Target Characteristics Branch
Radar Division

October 25, 1973

NAVAL RESEARCH LABORATORY
Washington, D.C.

Distribution limited to U.S. Government Agencies only; test and evaluation, October 1973. Other requests for this document must be referred to the Director, Naval Research Laboratory, Washington, D.C. 20375.

CONTENTS

Abstract ii
Authorization ii

INTRODUCTION 1

BACKGROUND 2

DEMONSTRATION OF VECTOR TECHNIQUE 2

Experimental Confirmation 7
Uses of Vector Technique 7

EFFECT OF RADAR ANTENNA SCAN 9

Loop Interaction Effects 14
Analysis of Three-Loop System 15
Triple Jammer Analysis 15

CONCLUSION 16

ABSTRACT

A simple technique was developed for analyzing the operation of multiple side-lobe canceler loops on signals from multiple jammers. This technique is a simple graphical method that requires very little mathematics yet gives its user a feel for canceler operation that is missing in the conventional mathematical approach. Examples of the application of this technique demonstrate the falseness of the common belief that n cancelers can adequately cancel the signals from n jammers when the jammer geometry is variable and the canceler antenna geometry is fixed. The use of this technique is recommended for determining the number and locations of auxiliary antennas required to protect a given radar from a given number of jammers in arbitrary locations.

AUTHORIZATION

NRL Problem R02-65
Project No. RF 12151402

Manuscript submitted May 31, 1973.

UNDERSTANDING AND OPTIMIZING MULTIPLE SIDE-LOBE CANCELER OPERATION

INTRODUCTION

The conventional mathematical technique of analyzing the operation of multiple side-lobe cancelers on multiple jammers does not provide a clear insight into the actual processes involved, nor does it automatically suggest methods for optimizing the canceler performance in practical situations. As a consequence, a simple vector technique for analyzing such loops has been developed that provides a lucid picture of the processes involved and offers help in optimization.

This technique allows an analyst to determine easily what the residue of multiple loops will be under any given geometry of jammers and auxiliary antennas through a complete 360° scan of the radar antenna if desired. It then allows him to determine the effect of repositioning the auxiliary antennas or tells him that he must add more antennas and loops to obtain the desired performance.

The technique is based on the fact that side-lobe canceler loops are linear, and when operating in groups the operation of any loop is independent of the operation of all other loops to a first approximation. This allows an analyst to pick any loop to start his analysis and to ignore the operation of all others while he completes his analysis of the first loop. In this way he can analyze one loop after another, with each successive loop operating on the residue of those already analyzed, and thus determine an initial approximation of the final residue produced by the group operating together. The approximation can be made much more accurate by repeating the process, using this initial result as the radar input to the cancelers.

With practice, the analyst can obtain a feel for the problem that will allow him to design an optimum arrangement of auxiliary antennas to protect adequately a radar from any given number of jammers.

This technique has been tested experimentally and found to be valid and valuable. It reveals that the common belief that n loops can adequately cancel the signals from n jammers is false when the jammer geometry is variable and the auxiliary antennas are omnidirectional and fixed in space. It explains why poor cancellation can be obtained from a given system with certain jammer geometries and good cancellation can be obtained with other jammer geometries without invoking multipath effects as an excuse for the poor performance.

It is hoped that, because the technique is so easy to use, it will prove valuable both to engineers designing systems and to customers buying them.

BACKGROUND

Side-lobe canceler loops are usually composed of an auxiliary omnidirectional antenna and a feedback loop that uses a sample of the jamming environment to subtract jamming signals from a radar receiver. In this process, it is assumed that the spacing between the omnidirectional antenna and the radar antenna is small compared to the autocorrelation distance of any jamming signal to be considered. In this way, any jamming signal picked up by the auxiliary antenna can be considered to be correlated with its counterpart picked up by the radar antenna. This permits the relative radio-frequency phase and amplitude of the auxiliary antennas' signal to be specified with respect to its counterpart picked up by the radar antenna, independently of the spectral characteristics of the jamming signal.

DEMONSTRATION OF VECTOR TECHNIQUE

The vector method of analyzing the operation of multiple canceler loops on the signals from multiple jammers can be demonstrated as follows.

Figure 1 shows a scanning serach radar antenna with two omnidirectional auxiliary antennas placed symmetrically about the radar antenna. The two auxiliary antennas are shown driving two coherent side-lobe canceler loops. The phase center of the radar antenna is the chosen reference point for defining the phase angle of all signals incident at the three antennas. The wavefronts from two jammers are shown incident upon the antennas from two different directions. One signal is represented by a circle on the line and the other is represented by a square.

The average rms magnitudes and the phases of the two jamming signals received at the auxiliary antennas with respect to their counterparts received by the radar antenna can be graphically represented by vectors as illustrated in Fig. 2. It is obvious that "circle" signals will lag and "square" signals will lead their radar counterparts in phase at auxiliary antenna 1, since the wavefront of the circle has not arrived at antenna 1, whereas that of square has already passed antenna 1 when the wavefronts arrive at the radar antenna phase center. Similarly, circle will lead and square will lag their counterparts in the radar antenna in auxiliary 2 as illustrated.

Radar antenna scan can be accounted for by controlling the magnitudes of the vectors in the radar antenna and inverting one or the other as they move from side lobe to side lobe. In Fig. 2, the two jamming signals were arbitrarily set equal in magnitude at the auxiliary antennas. They could just as easily have been made unequal. However, their resultants in the radar antenna were made unequal to demonstrate the directive nature of the radar antenna.

The signals picked up by the radar antenna are frequency translated by ω_1 from a local oscillator and pass through adder 1 and adder 2. The output of adder 2 enters multiplier 2 where it is multiplied by the jamming signals picked up by auxiliary antenna 1. The difference frequencies formed in this process are passed through a narrowband amplifier centered on ω_1. The multiplier and narrowband amplifier act like a correlator and produce outputs only when the inputs to the multiplier are correlated.

Mathematically, this operation can be demonstrated by letting circle be $A \cos(\omega t + \theta)$ in auxiliary 1 and $B \cos \omega t$ in the radar antenna. The output of adder 2 will then be

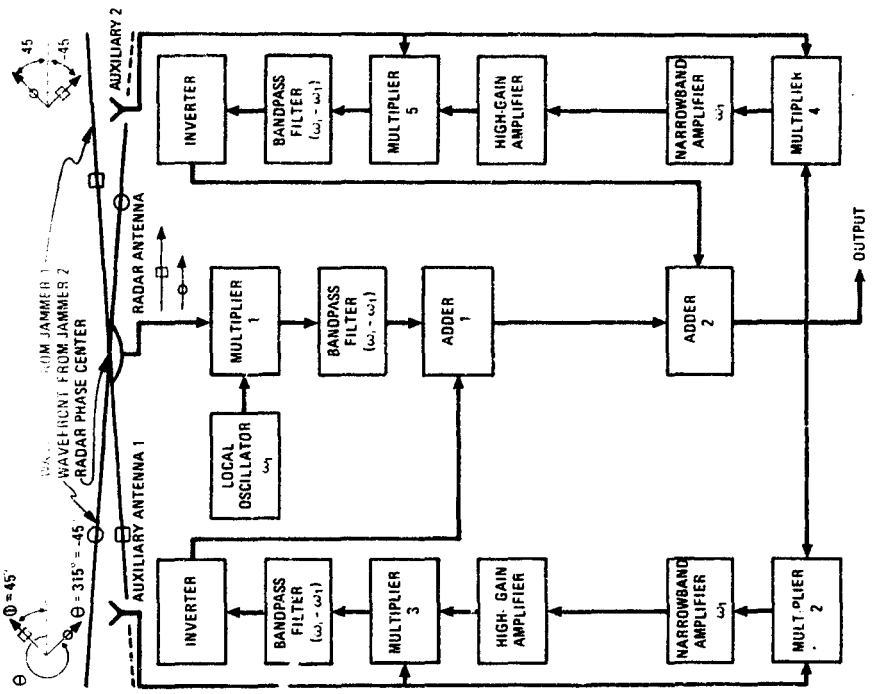

Fig. 1—Starting point in applying the vector technique

Fig. 2—Definition of phase and amplitude of the vectors at the antennas

$KB \cos(\omega - \omega_1)t$, and the output of the narrowband amplifier following multiplier 2 will be $GKAB \cos(\omega_1 t + \theta)$, where G is a gain function greater than unity.

The output of the narrowband amplifier for each correlated signal can be represented vectorially as illustrated by the dotted vectors in Fig. 3. The magnitude k and phase α of the resultant can also be portrayed graphically since all vectors are correlated at this point. This initial resultant will be labeled F_1^1 and has been called a weighting function. F_1^1 enters multiplier 3 where it multiplies the jamming signals picked up on auxiliary antenna 1. The resultant lower sideband is passed by a bandpass filter closely matched to that following multiplier 1.

The result of this process will be the auxiliary jamming signals rotated in phase by $-\alpha$ and having magnitudes proportional to k (Fig. 4). These vectors are inverted and added to the radar input to adder 1 to form the output of canceler 1 at the output of adder 1 as illustrated in Fig. 5. These vectors now become the input to multiplier 2 by passing adder 2, and the new output of the narrowband amplifier is portrayed by solid vectors. Note that the resulting phase of F_1, the new resultant, is rotated toward zero and its magnitude is greatly reduced through cancellation of the two correlated components. This cancellation permits high loop gain to be employed without saturating the narrowband amplifier when the loop is closed.

It should be noted that, in this case, the amplitudes and phase relationships of the residues with respect to their counterparts in auxiliary antenna 1 are specified by the necessity for reducing F_1 by the amount required by the loop gain. If this gain is high, the phase of square signals out of the narrowband amplifier $(\phi - \gamma)$ must approach 180° with respect to circle whose phase will be $\theta - \delta$. Thus, the phase angle between the residue vectors must be such that $\phi - \gamma + 180° = \theta - \delta$ or $\gamma - \delta = \phi - \theta + 180°$. Putting in the assumed values for ϕ and θ yields $\gamma - \delta = 45° - 315° + 180° = -90° = 270°$. Since the phase angle between the two residue vectors is $360° - (\gamma - \delta)$, this phase angle can be seen to be $360° - 270° = 90°$.

The necessity for reducing F_1 to a small value also implies that the magnitudes of circle and square out of the narrowband amplifier must be nearly equal as well as nearly 180° out of phase. Since the signals in auxiliary antenna 1 were chosen equal, this means that circle and square residues out of adder 1 must be nearly equal.

These residues can now be considered the inputs to the second loop at multiplier 4 (Fig. 6). They will produce an initial weighting function F_2^1 as shown by the dotted vectors. This weighting function multiplied by the jamming signals in auxiliary antenna 2 will produce the vectors shown at the output of the bandpass filter following multiplier 5. These vectors are inverted and added to the residue of adder 1 in adder 2 to cancel the residue in the assumed case, since the angle between the residue vectors from loop 1 equals that between the vectors on antenna 2. Note that the residue decrease in the second loop reduces the output of the narrowband amplifier to produce the final weighting function F_2 shown by the solid vector. It should be noted at this point that cancelers can only rotate all vectors from their auxiliary antenna by a given angle α, control all magnitudes by the same gain function k, and subtract the resultant vectors from the radar antenna's signals.

The utility and power of this technique can now be illustrated by showing that two loops cannot always cancel two jamming signals. This is done in Fig. 7 where the phase angle of one jamming signal picked up on one auxiliary leads in phase by 90° its

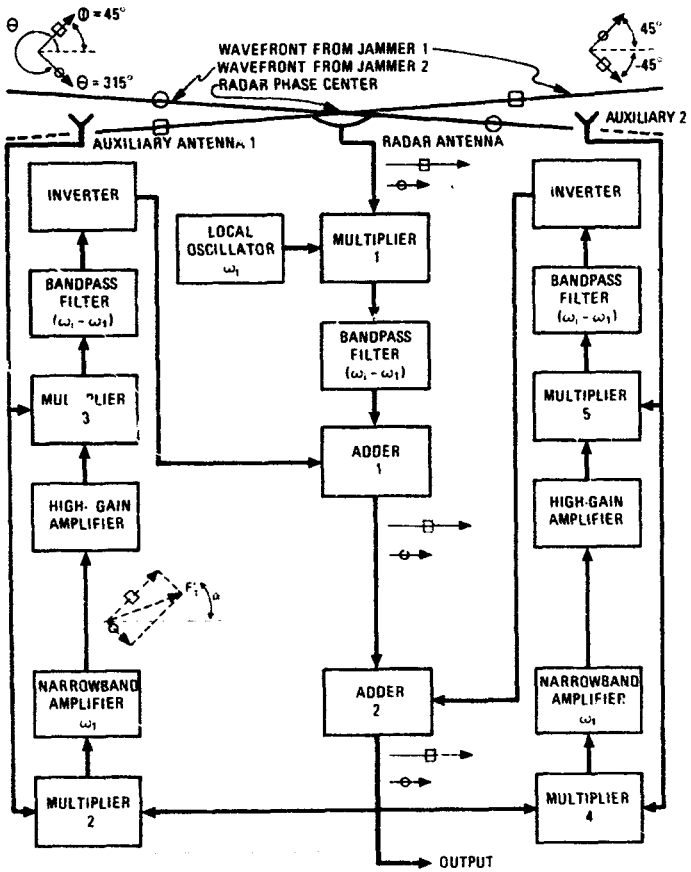

Fig. 3—Derivation of initial weighting function in loop 1

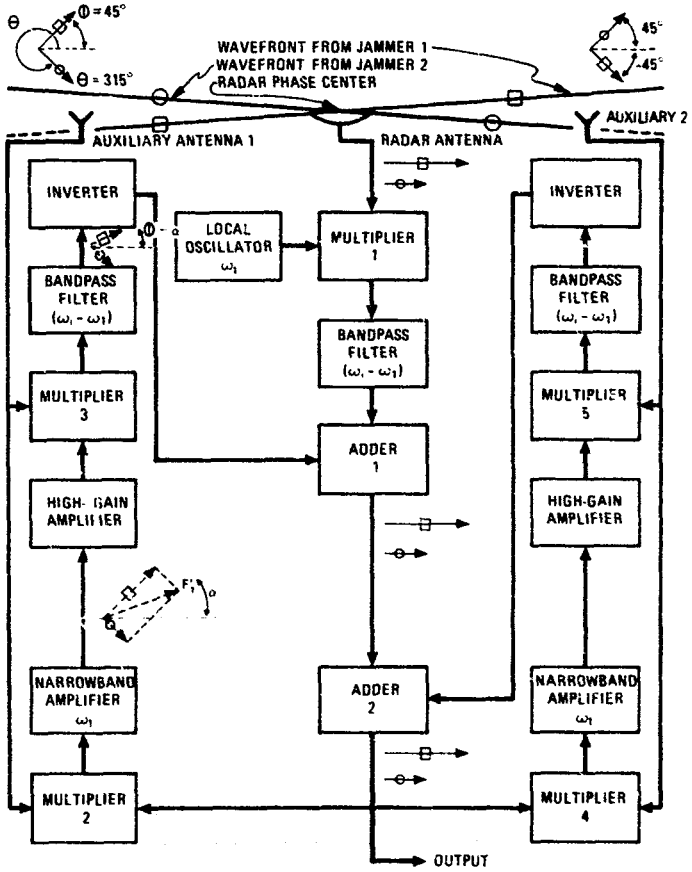

Fig. 4—Translation of auxiliary signals

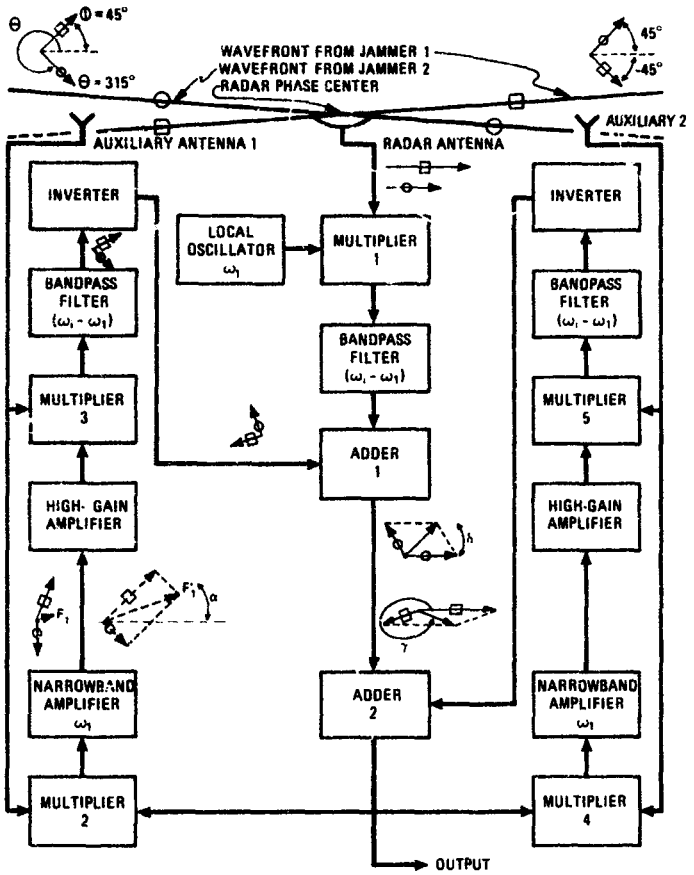

Fig. 5—Derivation of final weighting function in loop 1

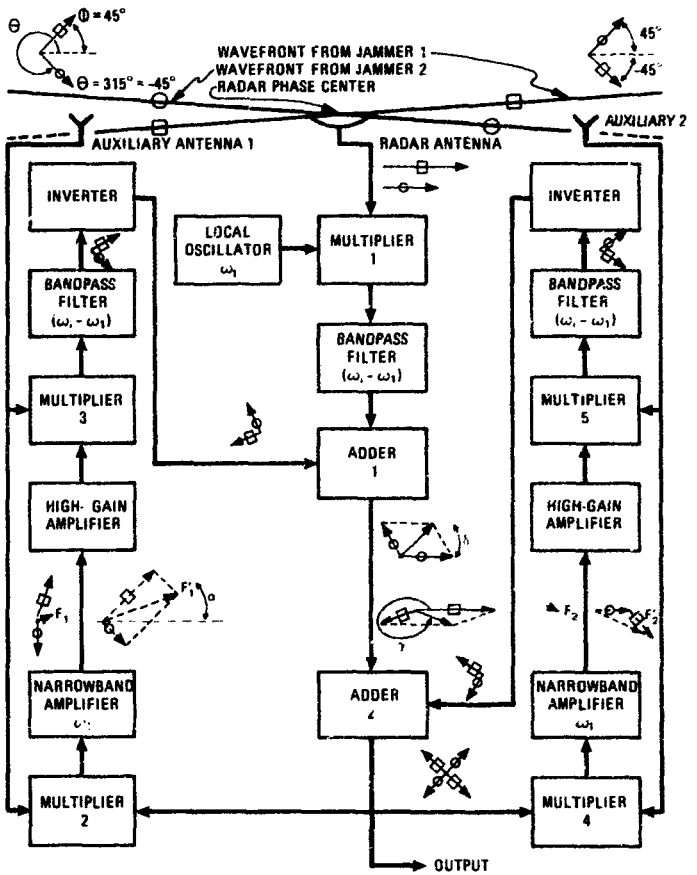

Fig. 6—Demonstration of vector technique for analyzing multiple canceler operation on the signals from multiple jammers

counterpart in the radar and the other lags its counterpart by 90°. With symmetrical auxiliary spacing, the inverse will hold true on the other auxiliary. In this case, the initial weighting function F_1^1 has a phase angle of 90°. This subtracts from the phase angles of the signals in auxiliary 1 to produce a square with 0° phase and a circle with 180° phase with respect to their counterparts in the radar antenna. Inverting these signals and adding them to the radar signals in adder 1 results in square canceling and circle adding. This produces a final weighting function F_1 such that with high loop gain, the residue consists of nearly equal parts of square and circle with magnitudes intermediate between square and circle in the radar antenna (the loop adds circle to circle and subtracts square from square). The second loop will form a weighting function of the same magnitude but opposite polarity as the first, but it cannot be shown since it would be so small. (Note that function F_1 is shown larger than actual size for demonstration purposes only.) This will translate the signals from auxiliary 2 so that they aid the first loop in canceling square and adding to circle in adder 2. In trying to help loop 1, loop 2 effectively increases its gain but cannot significantly change the residue, since infinite gain would only make the residue of square and circle equal and opposite in phase at the outputs of the narrowband amplifiers.

Since circle is not correlated with square at the output of adder 2, however, the jammer power output of adder 2 will be the sum of the powers of the two residues. In this way, the vector technique reveals that two loops cannot always handle two jammers and it provides information about the magnitude of the residue.

It should be noted that radar antenna scan might invert the sense of one of the vectors in the radar antenna in the situation illustrated in Fig. 7. If this happens, better cancellation will be obtained as illustrated in Fig. 8. Again, in this case, the second loop cannot contribute significantly.

It should also be noted that, if the jamming signals in the radar antenna in Fig. 7 had been equal, neither loop would have been able to form a weighting function, and no cancellation would have been obtained. This condition is illustrated in Fig. 9.

Experimental Confirmation

An analog simulator of the block diagram illustrated in Fig. 1 was constructed. The antennas were adders, and two uncorrelated thermal noise sources (balanced, modulating, variable-phase, uncorrelated carriers) were used as the jamming signal sources. The carrier phase and the total signal average rms amplitude of each signal input to each adder simulating the antennas were variable to permit any desired condition to be established. The operation of this simulator confirmed the validity of the vector technique for estimating multiple canceler operation on multiple jammers.

Uses of Vector Technique

The simulator verification of the vector technique encourages its use in obtaining an understanding of multiple-loop operation in expected conditions. For example, the effect of the jammer location, the effect of radar antenna scan, the effect of varying the spacing of the auxiliary antennas, and the effect of rotation of the radar antenna about a point not located at its phase center can be determined. This knowledge can then be used to specify how many and what locations should be filled with auxiliary antennas in order to optimize the canceler

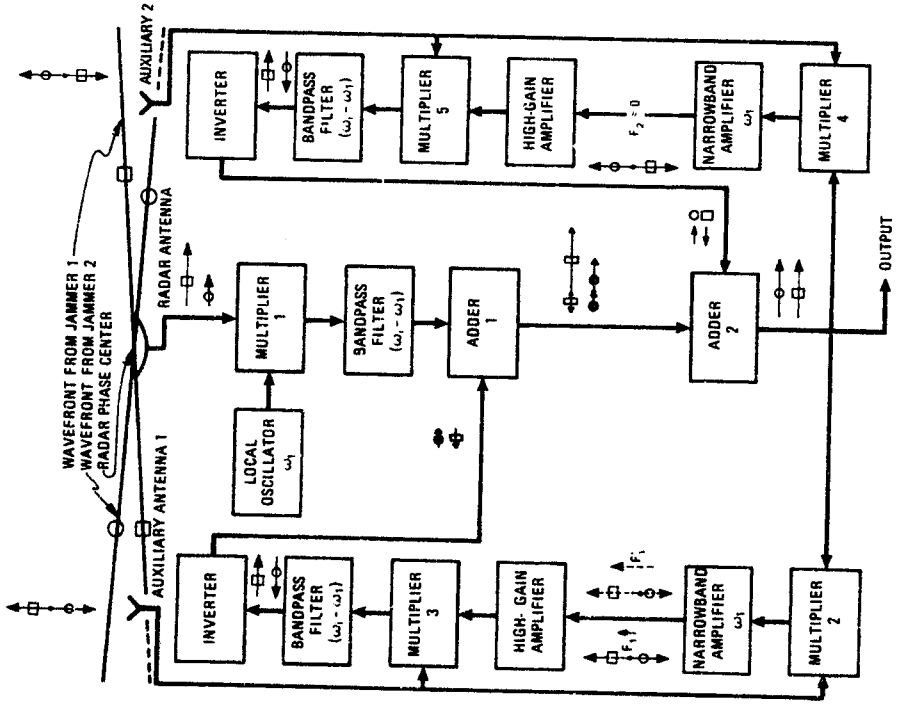

Fig. 7—Vector technique used to show a condition in which two cancelers offer poor cancellation of the signals from two jammers caused by antenna scan

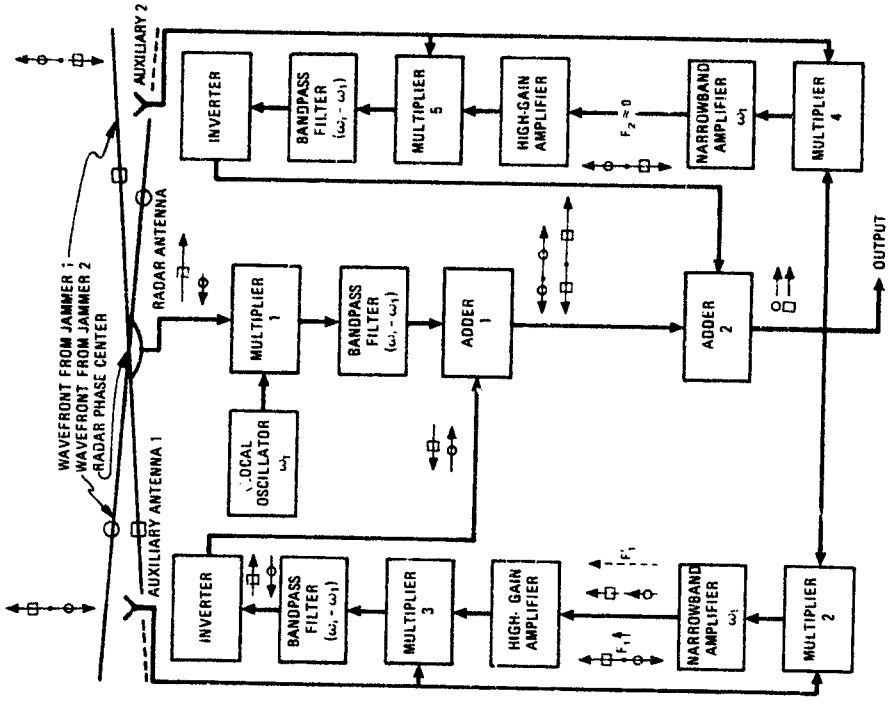

Fig. 8—Effect of phase inversion of one of the radar components in Fig. 7

operation. The effect of radar antenna scan about its phase center with symmetrical auxiliary antenna locations is analyzed in the next section as an example.

EFFECT OF RADAR ANTENNA SCAN

Radar antenna scan about its phase center will cause the relative magnitudes of the signals from two jammers at different locations to vary independently and will invert the sense of each jamming signal when the jammer moves from one side lobe to the next. An idea of the effect of this variation on multiple cancelers can be obtained as follows.

FIgure 10 illustrates one case in which one jammer (circle) is near a null of the radar antenna pattern and the signals on the auxiliary antennas are in phase. In this case, F_1^1 is produced by square alone. However, F_1^1 multiplies both square and circle from auxiliary antenna 1. The inverter thus provides two signals to adder 1 while the radar only provides one. The output of adder 1 becoming the new input to multiplier 2 produces an F_1 that is the difference of the two correlating components as illustrated. With high loop gain, the output of adder 1 will approach equal values of circle and square with a total power equal to half the power of the single component in the radar antenna. The half-power condition is evident by virtue of the residue being composed of two uncorrelated vectors, each having one-half the magnitude of the vector in the radar antenna. Each component thus has one-fourth of the power, which results in their sum having one-half the power. The output of adder 1 is now the input to multiplier 4 in the second loop. However, since these vectors are nearly equal and opposite, the second loop cannot form more than a token weighting function. As a consequence, it cannot contribute significantly to adder 2 and the output of adder 2 will remain that out of adder 1 with loop 1 gain increased by 2. In this case, the two loops will provide only a 3-dB cancellation ratio.

Figure 11 illustrates the action of the loop when the signals on the auxiliary antennas are in phase and equal in magnitude, while the signals in the radar antenna are 180° out of phase due to the jammers' being on side lobes oppositely sensed but equal in magnitude. Note that this condition prevents both loops from developing a weighting function, and no cancellation is obtained.

Figure 12 demonstrates the equal-amplitude, equal-phase case in which good cancellation is obtained by one loop, and the other does nothing but double the gain of the first.

The trend that falls between equality of signals and one signal missing in the radar antenna is illustrated for the in-phase condition in Fig. 13 and the out-of-phase condition in Fig. 14. In the in-phase case, Fig. 13, the residue of each signal has a magnitude equal to one-half the difference in magnitude of the signals in the radar antenna, and the second loop does little. In the out-of-phase case, Fig. 14, the residue of each signal has a magnitude equal to the magnitude of the smaller signal plus one-half the difference between the two signal amplitudes in the radar channel. In this case, also, the second loop does little.

It should be noted that jammer geometries that allow one jammer to enter a null on the radar antenna while the other jammer is near a side-lobe peak are bad cases if the signals from each jammer on the two auxiliaries are in phase. It should also be noted that jammer geometries in which the jamming signals arrive at both auxiliary antennas with 90° lags and leads are also bad. Good jammer geometries are those in which the jamming signals in the auxiliary antennas lead and lag by 45° in one auxiliary and lag and lead by 45° in the other. The latter case is illustrated in Fig. 6 and Figs. 15 and 16 which illustrate

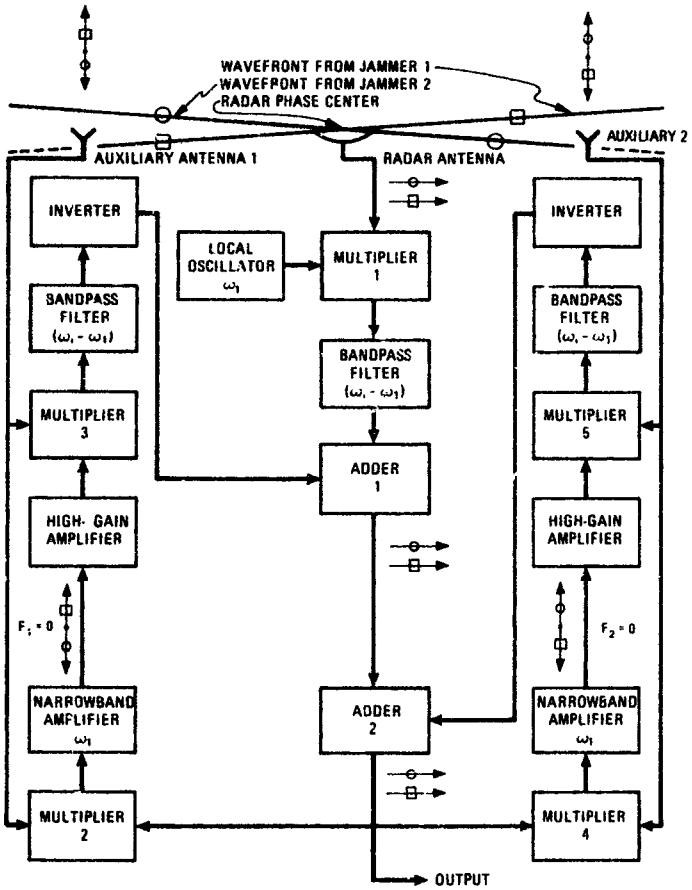

Fig. 9—The case of Fig. 7 with equal radar components

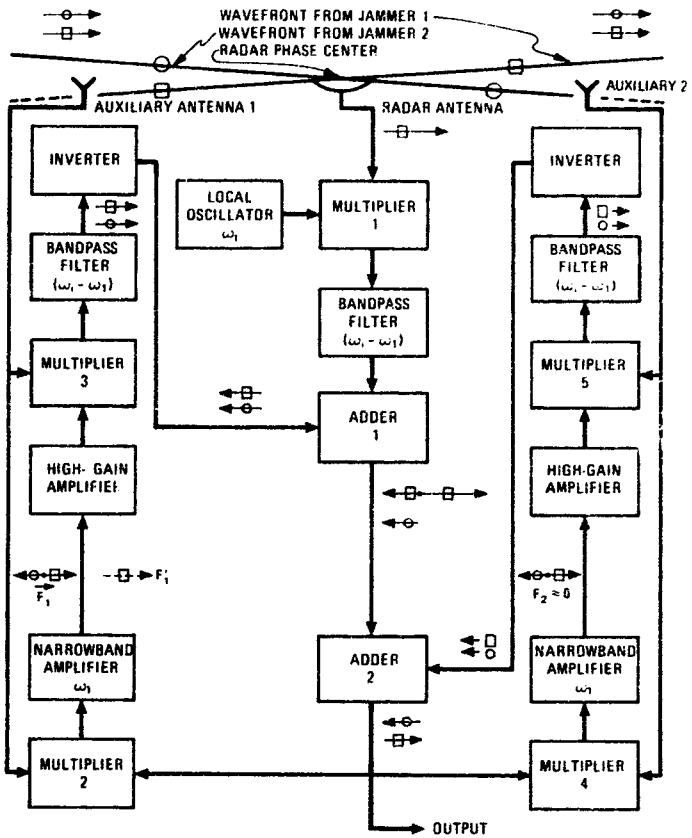

Fig. 10—One jammer in a radar antenna pattern null

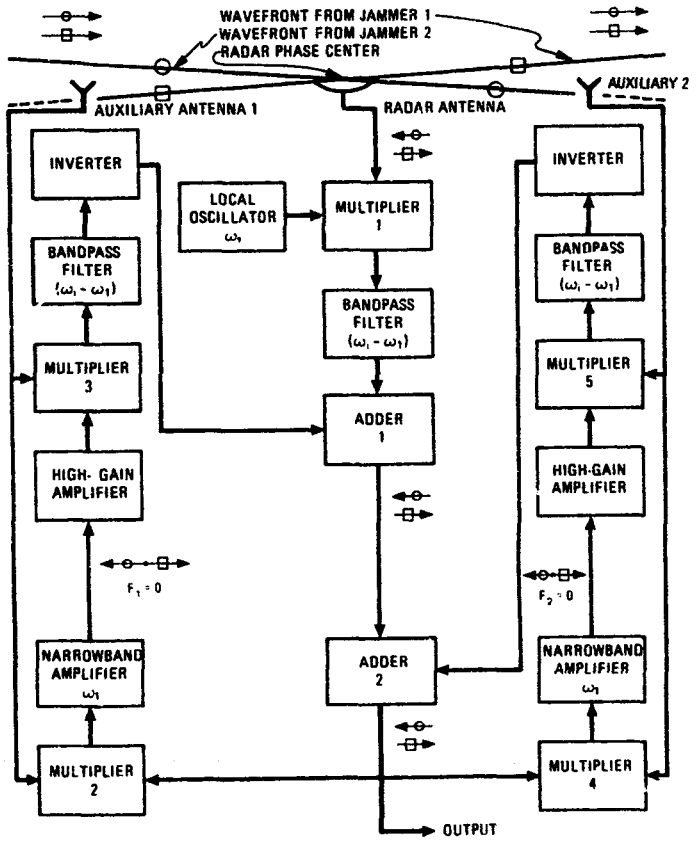

Fig. 11—Equal vectors with radar components 180° out of phase

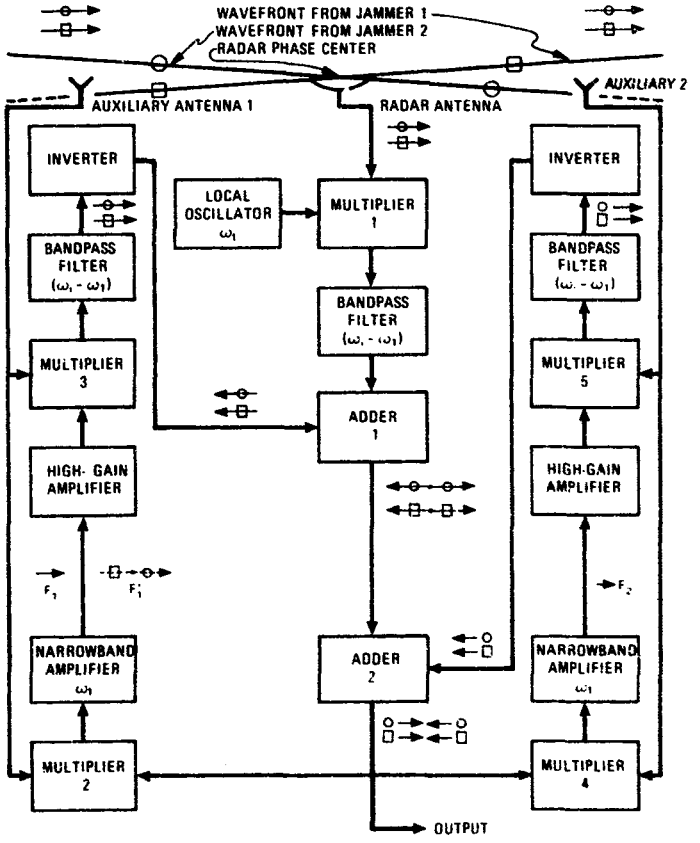

Fig. 12—Equal-amplitude components all in phase

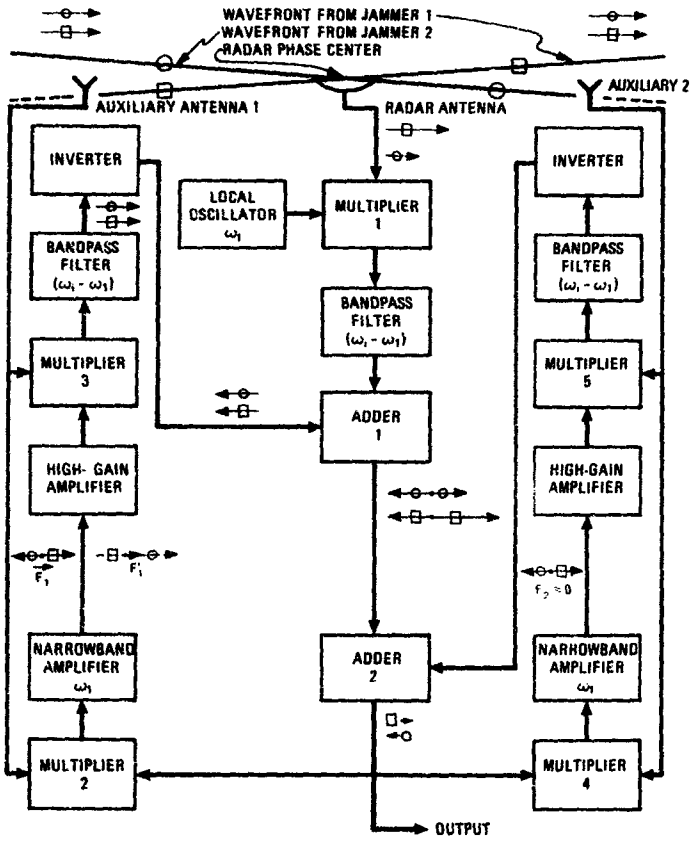

Fig. 13—Unequal radar components, in phase

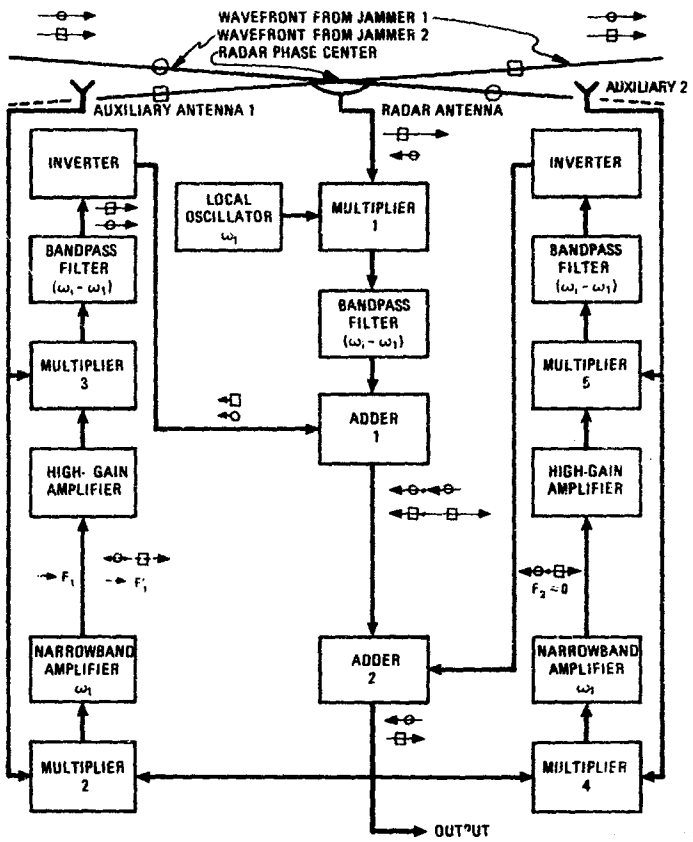

Fig. 14—Unequal amplitudes, 180° out of phase

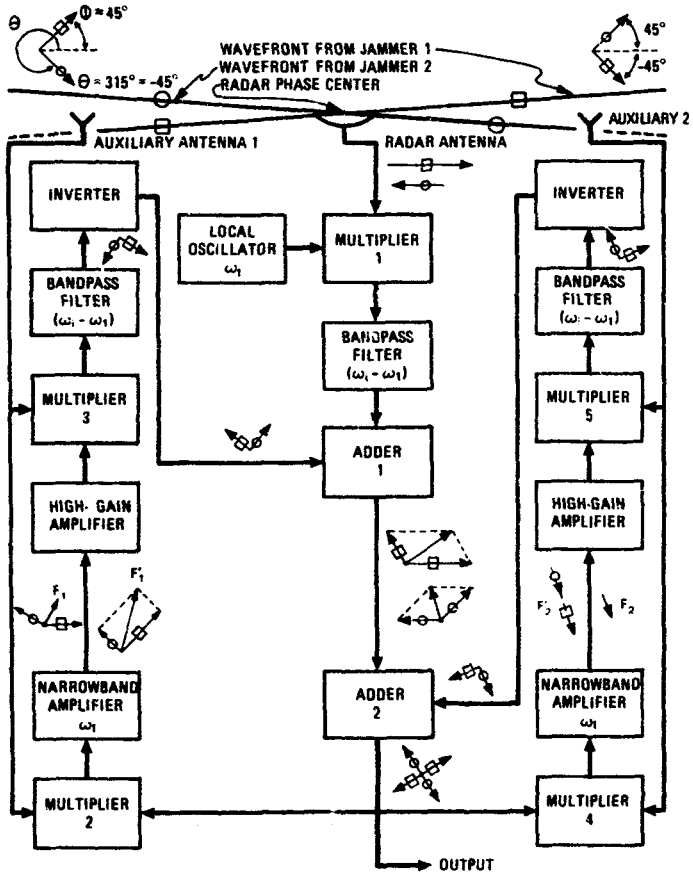

Fig. 15—Best-case auxiliary phasing, one vector flipped by radar antenna

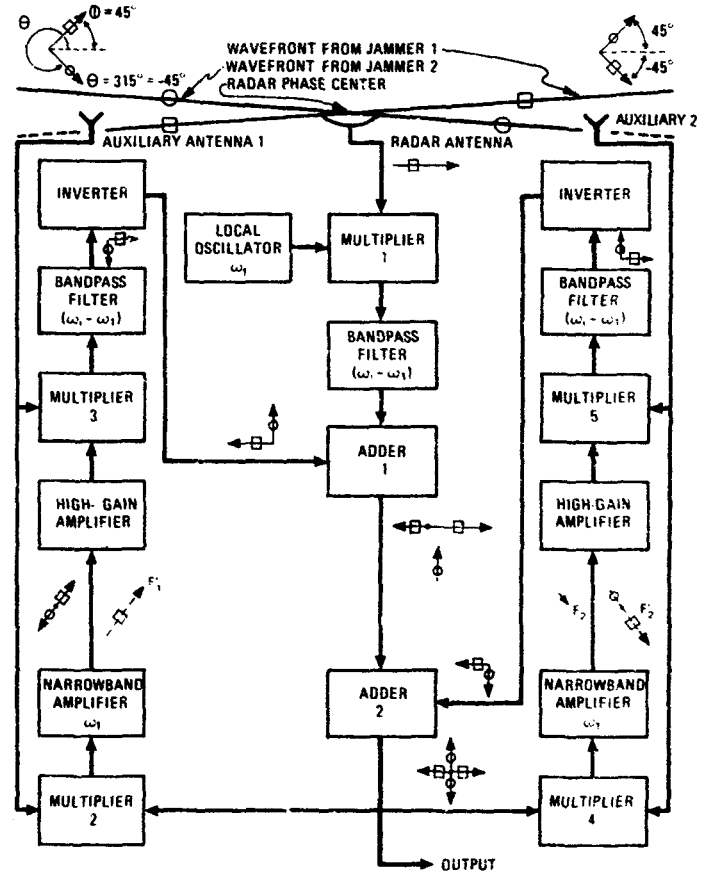

Fig. 16—Best-case auxiliary phasing, one jammer in radar antenna null

typical variations that could occur due to radar scan and show good cancellation in all cases.

Loop Interaction Effects

A case in which the operation of one loop allows another loop to function is illustrated in Fig. 17. In this case, the order of loop analysis would be important or two successive analyses would be required.

Figure 17 portrays two equal and zero-phase signals in the radar with 180° and 90° relationships in the auxiliaries. If the analysis starts with auxiliary antenna 1, it is obvious that no weighting function can be developed by loop 1 and an analyst would proceed to loop 2. Loop 2 would be found to produce a residue out of adder 2 composed of equal parts of circle and square with phase angles of +45° and -45° with respect to their counterparts in the radar antenna. The residue magnitudes would be smaller than their radar counterparts by $(1/2)^{1/2}$. Loop 2 would then be said to produce a 3-dB cancellation ratio (ratio of power out of adder 2 with canceler loops open and closed).

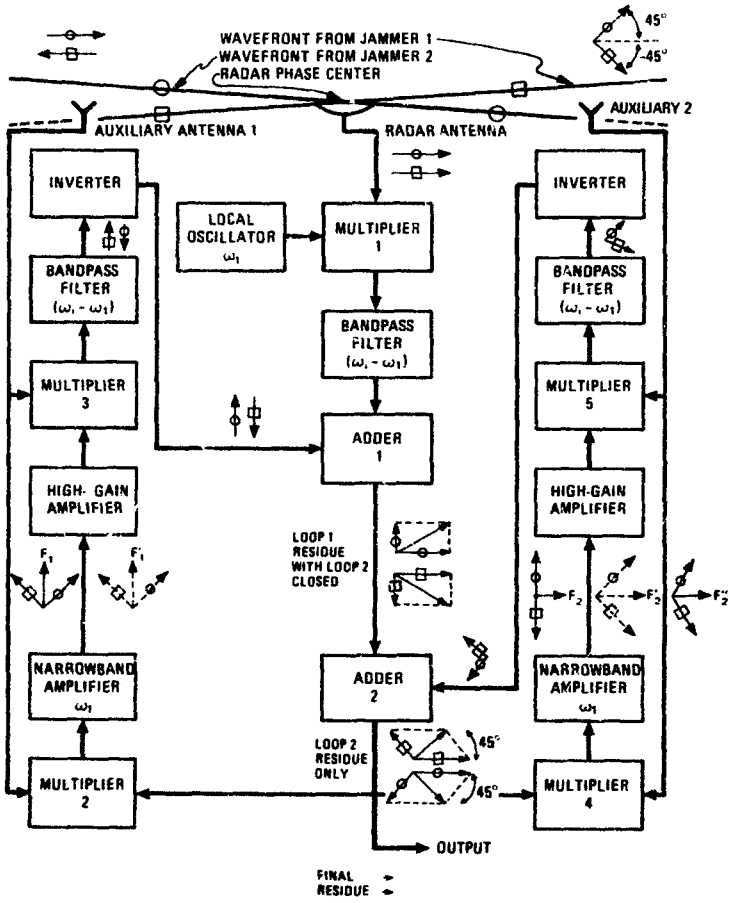

Fig. 17—Demonstration of loop interaction

At this point, the analyst should note that loop 1 develops a weighting function F_1^1. Loop 1 attempts to cancel the vertical components of the residue of loop 2. In so doing, it reduces the magnitudes and phase angles of the two components of the residue. The reduction in the phase angles is now opposed by loop 2 developing a new weighting function F_2^{11} that attempts to hold the phase angles at +45° and –45°. Stability is reached with loop 1 canceling the vertical components of the residue of loop 2 as loop 2 cancels the horizontal radar components. The cancellation ratio of both loops operating in this case would only be limited by the gain of the loops.

Loop interaction, when it exists, is evident as soon as the first approximation to the multiple loop residue is obtained. The angles and relative magnitudes of the residue components can be compared to the angles and relative magnitudes of the signals on the auxiliary antennas to determine if any loop or loops can further reduce the residue.

Analysis of Three-Loop Systems

A three-loop system can be obtained by adding a third adder following adder 2 and a third auxiliary antenna driving a third canceler that transmits inputs to adder 3. The addition of a third auxiliary antenna permits an extra sample of the jamming environment to be obtained. However, its effectiveness is still dependent upon the assumed jammer geometry and the assumed locations of the auxiliary antennas. For example, in the case illustrated in Fig. 6, the addition of a third loop would not significantly improve jamming since two loops are adequate. However, in Fig. 7, the third loop would be extremely useful if it were positioned to receive both jamming signals in phase with their radar counterparts, and nearly any phases other than those shown in Fig. 7 would yield some cancellation.

It should be noted that the best location for auxiliary antenna 3 is that in which the phases of the jamming signals are such that the loop can rotate them to be out of phase with the residues of the first two loops. In Fig. 7, this would require both the jamming signals on auxiliary 3 to be in or 180° out of phase with their radar counterparts. In Fig. 10, it would require one of the jamming signals on auxiliary 3 to be in phase with its radar counterpart and the other to be 180° out of phase.

It should be noted that the good cancellation obtained in Fig. 1, 15, and 16 would not have been obtained if auxiliary 2 had received a circle with lag and a square with lead, since loop 2 could not have rotated them to have each component out of phase with its counterpart in the residue of loop 1.

More than three loops can be obtained by adding more loops as done to obtain three and the analysis can be continued loop by loop. In all cases, the optimum position for the next auxiliary antenna can be determined by determining the phases of the residues it has to work on.

Triple Jammer Analysis

Three jammers and multiple loops can be easily accommodated by drawing a third phase front through the radar phase center and denoting it by a different symbol. The analysis with three jammers then proceeds as it did with two. However, three vectors

contribute to the weighting functions and one, two, or three vectors may appear in the residue.

It is important to remember that, regardless of the number of loops and jammers, each loop can only rotate all of the vectors on its auxiliary antenna by the same angle, control all of their magnitudes by the same gain constant, and subtract the resultant vectors from the radar signals.

CONCLUSION

The vector technique of analyzing multiple side-lobe canceler loop operation on multiple jammers is a valid check of performance and permits optimum auxiliary antenna locations to be determined for any given jammer geometry. With practice, many loops and many jammers can be analyzed in a short time. In addition, the use of this technique and the simulator results reveal that the popular belief that n loops can effectively cancel n jammers in all condition is completely false when the auxiliary antennas are omnidirectional so that they cannot resolve the various jammers in angle.

★ U. S. GOVERNMENT PRINTING OFFICE : 1973—542-166/Z-131

Security Classification

DOCUMENT CONTROL DATA - R & D

(Security classification of title, body of abstract and indexing annotation must be entered when the overall report is classified)

1. ORIGINATING ACTIVITY *(Corporate author)*

Naval Research Laboratory
Washington, D.C. 20375

2a. REPORT SECURITY CLASSIFICATION

Unclassified

2b. GROUP

3. REPORT TITLE

UNDERSTANDING AND OPTIMIZING MULTIPLE SIDE-LOBE CANCELER OPERATION

4. DESCRIPTIVE NOTES *(Type of report and inclusive dates)*

This is an interim report on a continuing NRL Problem.

5. AUTHOR(S) *(First name, middle initial, last name)*

Bernard L. Lewis and James P. Hansen

6. REPORT DATE

October 25, 1973

7a. TOTAL NO. OF PAGES

20

7b. NO. OF REFS

0

8a. CONTRACT OR GRANT NO.

NRL Problem R02-65

b. PROJECT NO.

Project No. RF 12151402

c.

d.

9a. ORIGINATOR'S REPORT NUMBER(S)

NRL Report 7610

9b. OTHER REPORT NO(S) *(Any other numbers that may be assigned this report)*

10. DISTRIBUTION STATEMENT

Distribution limited to U.S. Government agencies only; test and evaluation; October 1973. Other requests for this document must be referred to the Director, Naval Research Laboratory, Washington, D.C. 20375.

11. SUPPLEMENTARY NOTES

12. SPONSORING MILITARY ACTIVITY

Department of the Navy
Office of Naval Research
Arlington, Virginia 22217

13. ABSTRACT

A simple technique was developed for analyzing the operation of multiple side-lobe canceler loops on signals from multiple jammers. This technique is a simple graphical method that requires very little mathematics yet gives its user a feel for canceler operation that is missing in the conventional mathematical approach. Examples of the application of this technique demonstrate the falseness of the common belief that n cancelers can adequately cancel the signals from n jammers when the jammer geometry is variable and the canceler antenna geometry is fixed. The use of this technique is recommended for determining the number and locations of auxiliary antennas required to protect a given radar from a given number of jammers in arbitrary locations.

DD FORM 1 NOV 65 1473 (PAGE 1)

S/N 0101-807-6801

Security Classification

Security Classification

14 KEY WORDS	LINK A ROLE	LINK A WT	LINK B ROLE	LINK B WT	LINK C ROLE	LINK C WT
Side-lobe cancellation						
Radar CCM						
Adaptive loops						

DD FORM 1 NOV 65 1473 (BACK)
(PAGE 2)

Security Classification