NRL Report 6261

Load-Carrying Terminals for Armored Electric Cables

E. C Czul and J J Gennari

Sonar Systems Branch
Sound Division

August 31, 1965

APPROVED FOR PUBLIC
RELEASE - DISTRIBUTION
UNLIMITED

U.S. NAVAL RESEARCH LABORATORY
Washington, D.C.

CONTENTS

Abstract	ii
Problem Status	ii
Authorization	ii
INTRODUCTION	1
NRL CABLE SOCKET DESIGNS	2
Mechanically Assembled Sockets	2
Potted or Poured Sockets	4
OTHER SOCKETS	10
TEST RESULTS	13
CONCLUSIONS	13
Mechanically Assembled Sockets (NRL Types)	13
Potted or Poured Sockets (NRL Types)	13
ACKNOWLEDGMENTS	13
BIBLIOGRAPHY	17

Copies available from
Clearinghouse for Federal Scientific and
Technical Information (CFSTI)
Sills Building, 5285 Port Royal Road
Springfield Virginia 22151
$1.00

ABSTRACT

Four load-carrying terminals, or sockets, for use with armored electric tow cables, have been designed, developed, and tested at NRL. Two of these designs are mechanically assembled, and two are potted, or cast. In the mechanically assembled design, the attachment of the socket to the load-carrying wires is achieved by mechanically gripping the armor wires between force-fitted friction surfaces. The potted designs use a low-melt-temperature alloy or an epoxy compound which intimately flow about the armor wires. After hardening, the socket is ready for use.

The mechanically assembled socket can develop more than 95 percent of the full cable strength before failing; it has been field tested satisfactorily. However, of all the NRL socket types discussed, the authors' preference is for the low-melt-alloy potted type. This type socket has been used at sea for more than a year with good results. The major advantage of this type socket is the ease and speed with which it can be replaced by field workers.

For information purposes, a few socket designs used by organizations other than NRL have been illustrated and discussed.

PROBLEM STATUS

This is a final report on one phase of the problem; work is continuing on other phases.

AUTHORIZATION

NRL Problem S01-08
Project SF-001-03-20-8057

Manuscript submitted February 18, 1965.

LOAD-CARRYING TERMINALS FOR ARMORED ELECTRIC CABLES

INTRODUCTION

A load carrying terminal is the link between an armored electric cable and an underwater towed or suspended body. This link performs the functions of transferring the load imposed by the towed body to the load-carrying members of the cable and providing an outlet for the electrical conductors from the end of the armored cable. For the sake of brevity and convention, this load-carrying terminal will hereafter be referred to as a socket.

It is not intended that this report cover all types of sockets currently in use. The types discussed are a small sample of those sockets in use by U.S. Government-supported or sponsored activities, by Canada and England, and by U.S. industry. Also, the socket types shown are only a fraction of the cable socket designs in use at NRL.

For this presentation, socket types have been divided into two general categories: the mechanically assembled type and the potted or poured variety. In the mechanically assembled type, the attachment of the socket to the load-carrying armor wires of the cable is achieved by mechanically gripping the armor wires between force-fitted friction surfaces. The potted design effects security by use of low-melt-temperature alloys or epoxy compounds which when poured into the socket cavity intimately flow about and immerse the armor wires in the liquid. After the liquid has cooled, set, and cured, the socket is ready for use.

Of the NRL socket designs presented, two are mechanically assembled and two are potted. Load tests and field-usage results of the NRL designs are discussed. The remainder of the sockets are preferences of the various organizations responsible for their design or development.

Armored cables used in underwater work generally have two layers of wire elements surrounding the electrical conductors. Each armored layer contains a multiple of six wires. If the wires are of the same diameter, the outer layer has six wires more than the inner layer. Generally, when wires of different diameters are used, both layers have the same number of wires. Armored cables are also available having three or more layers of wire. Each layer of wire is wound in spiral fashion, with the direction of twist being opposite for successive layers. The reverse winding of the successive layers tends to prevent "caging" of the cable when loads are suddenly released. Also, this type of winding minimizes spinning of the cable as a load is lowered or raised. A loaded cable spins because of the unbalanced torque which exists in spiral-wound armor construction. One of the functions of three-layered armored cable construction is to attempt to achieve a balanced torque in the stressed cable. Three-layered, balanced-torque armored cables may have the two inner layers wound in the same direction. While it may be theoretically possible to design a nonspinning, spiral-wound armored cable, the achieved results have restrictions or limitations in other areas of practical interest which offset the benefits which may be realized from a nonspinning cable design. Other cables designed to prevent cable spin under load are the "basket-weave" armor or braided type and the imbedded, straight-lay armor variety. Each type of armored cable has its place if judiciously selected.

The sockets which will be discussed are primarily for use with a two-layered, spiral-wound armored cable. Some of the sockets are suitable for terminating cable wires of both equal or unequal diameters. A primary requisite of any cable termination should be that the socket has the same load-carrying ability as the cable itself. It is the writers' opinion that any socket which cannot be loaded to at least 90 percent of the breaking strength of the armored cable should not be used in undersea work. This is especially true for short cables carrying heavy loads and subjected to dynamic loading. Any socket which cannot develop at least 95 percent of the breaking strength of a cable is not used at sea by NRL.

NRL CABLE SOCKET DESIGNS

Mechanically Assembled Sockets

One of the earlier sockets used by the writers was of the mechanically assembled type (Figs. 1,2). The housing or shell of this socket was made of heat-treated 4130 steel. This housing is strong enough to carry loads in excess of 150,000 lb. Since the socket shell is the most expensive part of the terminal assembly, this shell was retained for all subsequent socket designs. Actually, not only was the same socket design kept, but some of the same socket shells used in the early 1950's are still in use today.

This early socket type consists of a solid soft iron, truncated cone with armor wires gripped between this cone and similarly tapered split clamping rings. In this design, the wires must first be meticulously straightened; then wires from each layer are alternately distributed about the cone's periphery. After being clamped with the split rings, the excess lengths of the wire ends are cropped. This clamped subassembly is forced into the socket housing with a jack screw, then is held in place with a compression-loading threaded plug. This socket can be used only with armored cable whose wire elements are all of the same diameter. While this socket has a satisfactory load rating, a good technician requires five to six hours to make an assembly, using special jigs and fixtures.

In an attempt to reduce assembly time and eliminate the need for special fixtures to effect assembly, the internal subassembly of the socket was redesigned. The new design was made suitable for armor wires of equal or different diameters. In an attempt to obtain more gripping force per wire, it was believed that better use could be made of the compressive force attendant with the assembly of the socket. The idea of using several layers of washers or disks with the armor wires divided between the different layers of washers seemed to provide the answer. It was first proposed to divide the 48 wires of the cable into four 12-wire groups. Since the axial compressive force was normal to the washers, each group of 12 wires would experience the total compressive force used to make up the socket. This arrangement of four 12-wire groups necessitated nine washers for the subassembly; this number of washers was considered excessive. A modification of the original idea resulted in the seven-washer subassembly shown in Fig. 3. In this subassembly the 24 inner wires of the armor are clamped between one set of washers, while the outer 24 wires are divided into two 12-wire groups. The wires in this design are reverse wound about the washer in order to take advantage of regenerative loading when the cable is under stress.

In order to make use of the existing socket housings, the stack height of the washer assembly was fixed. Thus, the inner radius of the washer was fixed. This inner radius – which is the first bend experienced by the armor wires in any mechanically assembled socket – is probably the single most limiting factor which sets the efficiency or load-carrying ability of a cable terminal. When a pull test is performed on strong socket terminals, the wire elements generally break at this first bend (Figs. 4,5,6). Within limits, the greater the radius of the first bend the greater the holding force of the socket will be. In order to increase the radius of this first bend, a thicker washer is used.

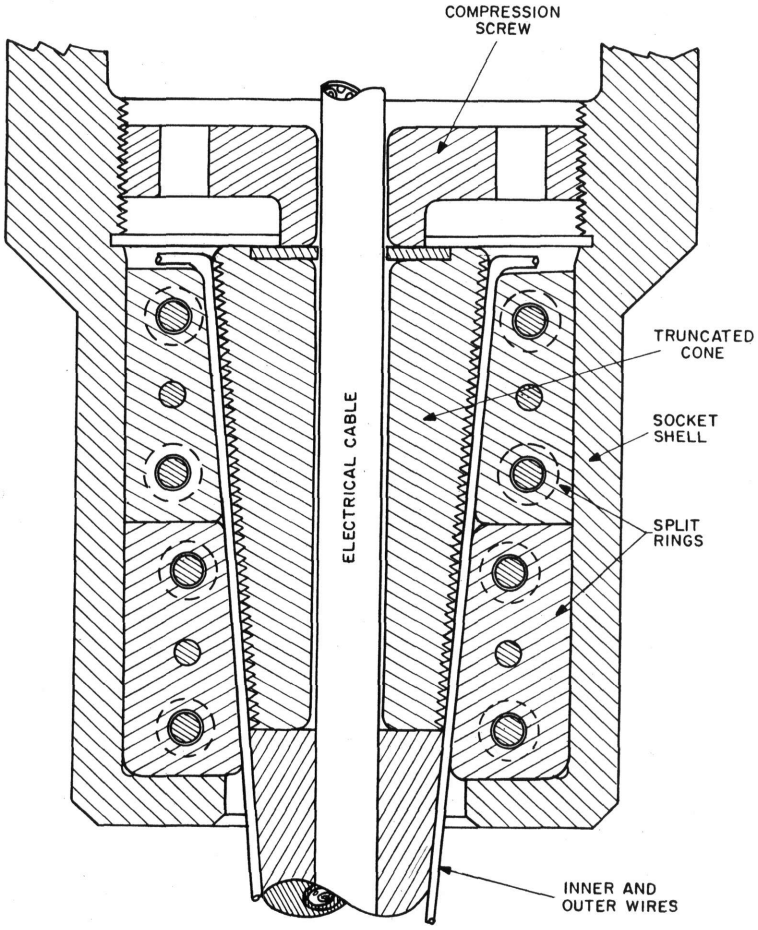

Fig. 1 - NRL truncated-cone socket

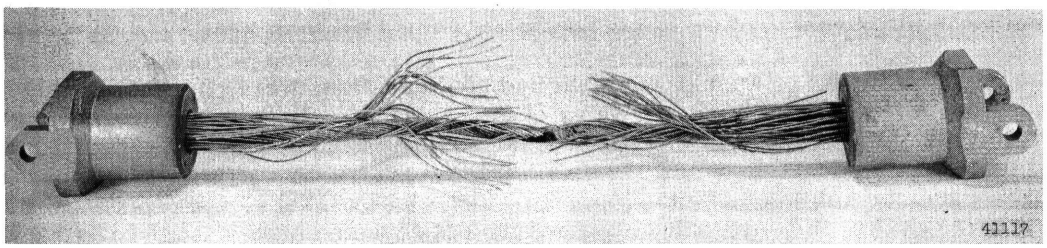

Fig. 2 - Tensile test of 0.57-in.-diameter cable terminals of the truncated-cone design. The cable failed at 29,100 lb.

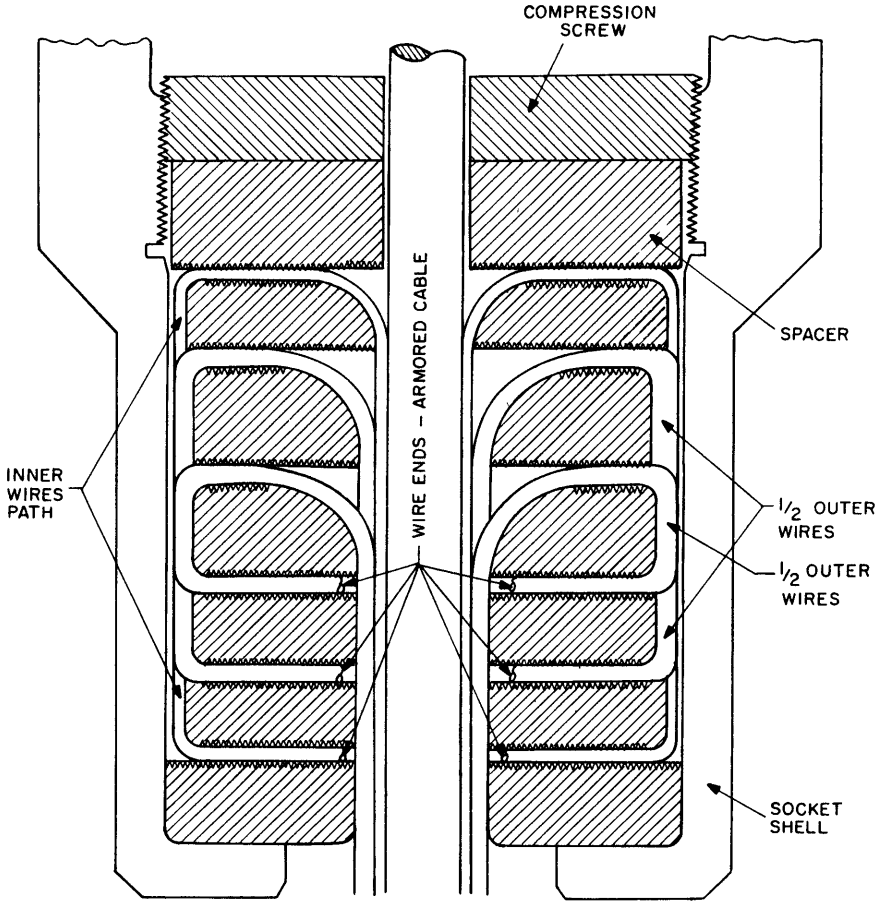

Fig. 3 - NRL seven-washer design

A five-washer subassembly, in which all wires of the inner armor are in one group, as are all wires of the outer armor, is shown in Figs. 7 and 8. With this configuration, practically the full strength of the cable can be developed by the socket.

The relative merits of washer material and configurations were checked. Some of the tests were aimed at assessing the value of flat-sided serrated washers versus smooth washers. Also, the use of brass instead of steel was investigated. Serrated brass washers showed less gripping force than smooth-sided brass washers. Smooth-sided brass washers had slightly greater holding force than smooth-sided steel washers. Serrated steel washers gave the best results. However, these tests were not repeated often enough to prove conclusively the above finding. The experience of the socket assembler, whether a novice or experienced techanician has a bearing on the test results achievable. Inasmuch as the serrated steel washer assembly showed acceptable holding capability when assembled by nontechnicians, at sea as well as at the laboratory, this design was considered practical for field usage. If it were desirable to redesign the socket housing, the five-washer assembly would be incorporated into a three-washer design; the top and bottom washers can be eliminated.

Potted or Poured Sockets

A standard method of socketing a wire rope is the poured-zinc method. In this method the ends of the wire rope are fanned apart in a tapered socket cavity. A pure-grade zinc

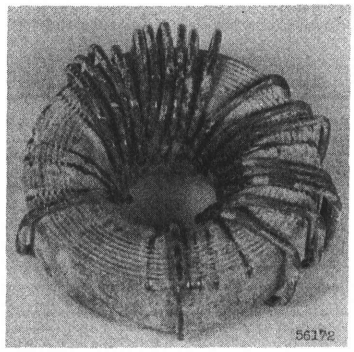

Fig. 4 - The outer-wire washer after being used at sea for two weeks' towing, then pulled apart in the tensile test machine. The terminal failed at 28,700 lb.

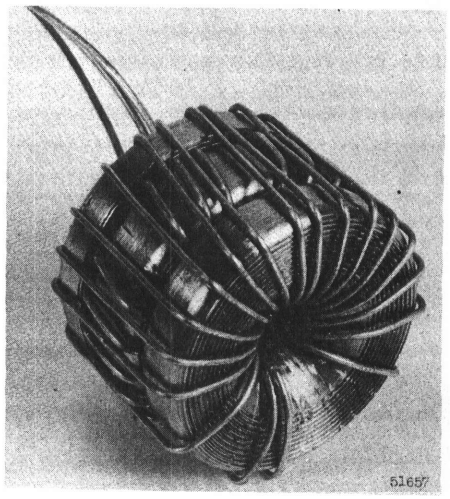

Fig. 5 - The central three washers of a terminal for the 0.68-in. cable after resisting 33,000 lb pull. The cable first broke at a "U"-bolt clamp.

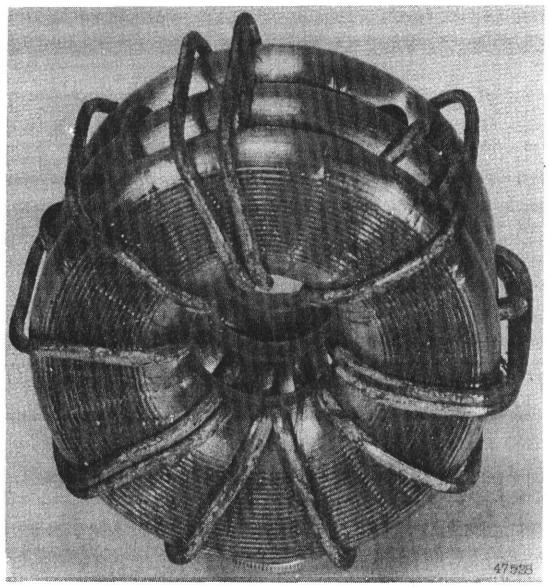

Fig. 6 - The central three washers of a seven-washer terminal for the 0.57-in.-diameter cable after resisting 19,150 lb.

at melt temperature is poured into the socket cavity, immersing the fanned-out wires. This type of socket develops the full breaking strength of the wire rope. Such a technique is well suited for use in the armored electric cable field. Not only is such a socket strong, but the assembly can be performed in the field by relatively inexperienced personnel in a minimum of time. Pure zinc, of course, could not be the melt used. Zinc melts at temperatures above 800°F; this temperature range would destroy the core or jacket normally used for electrical cables. A method of keeping the heat away from the electrical cable, or a lower temperature compound or metal alloy, would have to be used.

An understanding of why a zinc-poured socket is successful is needed before variations on this method should be attempted. Before a zinc-poured socket is made, the wire ends should be properly cleaned and prepared, and the socket housing brought up to the melt temperature. The zinc is then poured into the cavity. Continued heating of the socket housing is carried on until the whole assembly is above melt temperature, where it remains

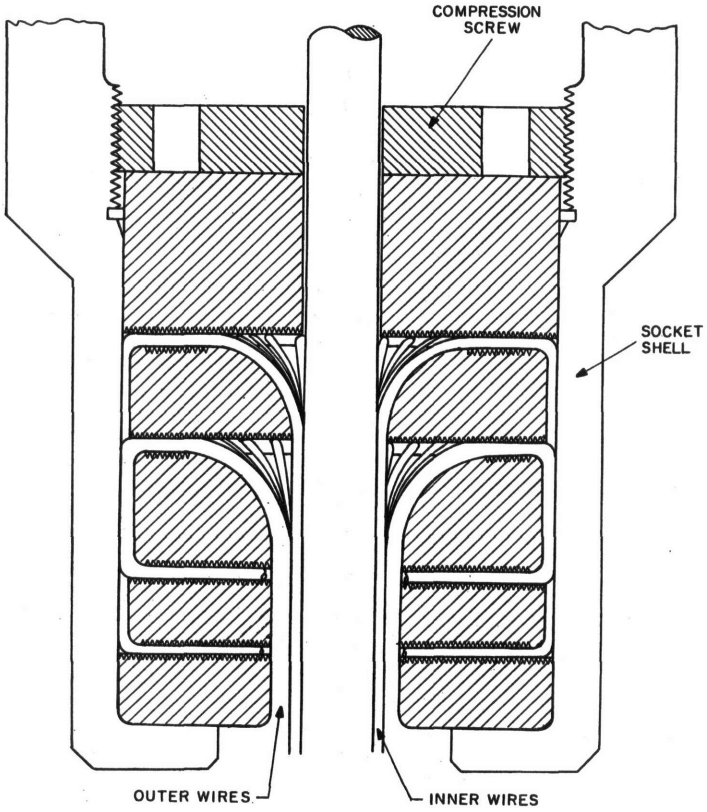

Fig. 7 - NRL five-washer design

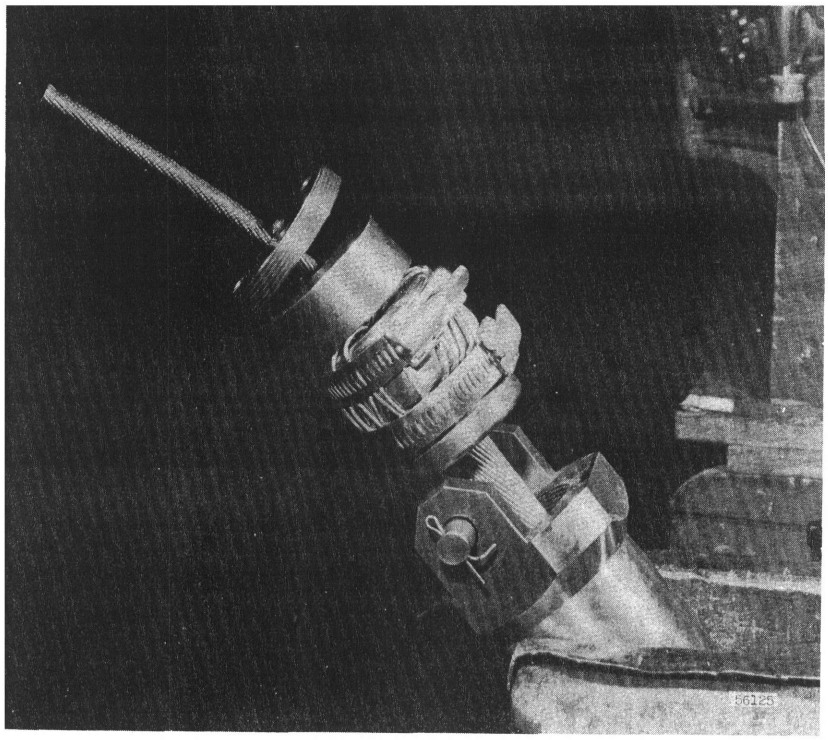

Fig. 8 - NRL five-washer terminal, ready to be drawn into the socket

until complete mechanical bonding between the wires and the zinc has taken place. This bonding assures that when the wires are tensilely loaded, the shear strength of zinc has to be overcome before a wire element can start to slip. If the wire ends in the socket housing are parallel to each other instead of fan-shaped, the cable will slip out from the socket long before the cable would have failed. Pull tests using fanned-out wire elements within a socket cavity were made which substantiated this premise. Similar tests proved to the writers' satisfaction that of considerably more importance to socket strength is the physical geometry of the wires within the potting than is the bonding shear strength of the potting material.

A third consideration bearing on socket strength is the cavity design of the socket housing. The wire-rope industry provides readily available sockets with tapered cavities. Obviously, tapered cavities are required if one is to have room to fan out the ends of the wire rope. Not so obvious is the part that the angle of taper plays in providing a regenerative compressive loading to the bonded wire ends. No attempts have been made by the writers to determine which angle would provide the best taper for a poured socket. Maximum regenerative compressive loading is obtainable when the compressive stresses are normal to the wire elements. The percentages of the load-carrying ability of the socket attributable to regenerative compression, wire geometry within the potting, and bonding shear strength were not investigated.

Low-Melt-Temperature Alloy – Two of the above three factors which in the writers' views contribute mostly to the strength of a poured socket were investigated; bonding shear strength and wire geometry. Tests were conducted with low-melt-temperature metal alloy on single wire elements in test fixtures (Figs. 9,10). This alloy melts at a temperature of 158°F. The wetted length of the immersed wire was varied in an attempt to obtain a number which would relate wetted surface area of a wire to pull strength. Doubling of the wetted-wire surface area of a straight wire did not give the expected doubling of the load-carrying ability of the wire. Good correlation between wetted-wire surface area and shear stress was not found in any of the straight-wire tests. For these tests, the potted cavity was purposefully not tapered in order that the wire would experience no regenerative compressive stresses when under load. It was concluded that the shear strength of the bond alone would contribute only a minor part to the load-carrying ability of a socket. It is very likely that little bonding existed between the wire and the alloy. The next step was to change the geometry of the single wire to configurations other than straight. Loops, spirals, bends, threaded washers, and knots were potted and tested. The wire configuration which gave the highest pull strength in this series was the overhand knot. This single-wire configuration pulled at 454 lb. The breaking strength of the individual wire was 760 lb.

Epoxy Resin Casts – If a strong mechanical bond between the armor wires and the metallic alloy used for potting is not necessary for an effective socket, other potting systems should be investigated. The high-compressive-strength epoxy systems seemed a logical choice. After checking various resin systems it was decided to use EPON 828, a room-temperature-curing epoxy having a low exotherm and an 18,000-psi compressive strength. The amount of hardener, which controls the amount of heat evolved during curing, was selected as eight percent. This percentage of diethylenetriamine hardener generated a temperature of 160°F during its curing cycle. This temperature is well below the plastic point of most electrical insulation materials used in cable construction.

After performing pull tests on single-wire specimens similar to those tests previously described, full-scale socket tests were made using the epoxy resin system mentioned previously. The internal elements of a disassembled socket are shown in Fig. 11. Consistently good results were obtained with the epoxy-cast system, wherein the wires were fanned out and reverse-bent 180 degrees (Figs. 12, 13). For these sockets, no particular order of wire geometry was observed in the fanning-out process. As long as a 180-degree bend existed in all wires, the pull tests resulted in the cable parting outside of the socket. This epoxy-poured socket is quite simple to assemble. The wires need not be straightened

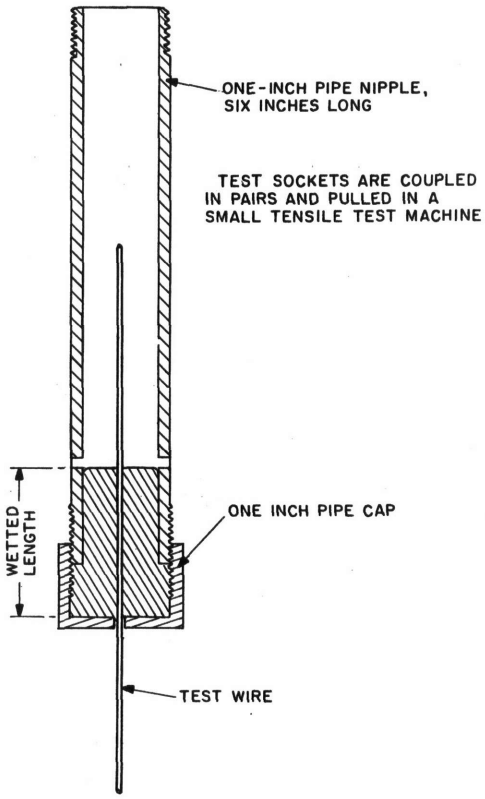

Fig. 9 - Single-wire load test fixture

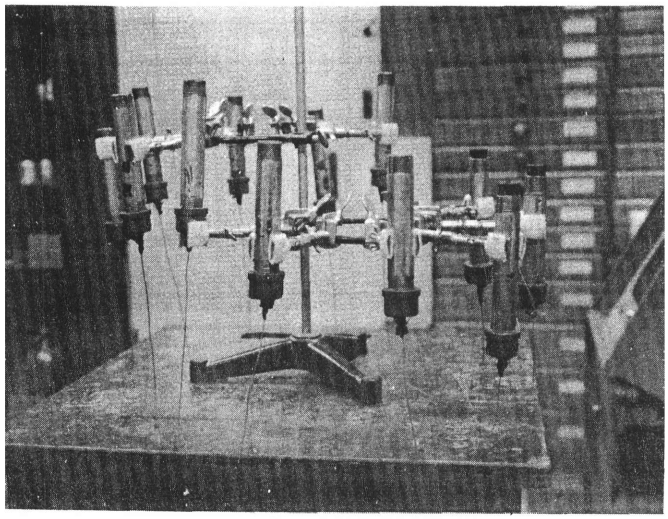

Fig. 10 - Single-wire test specimens in preparation

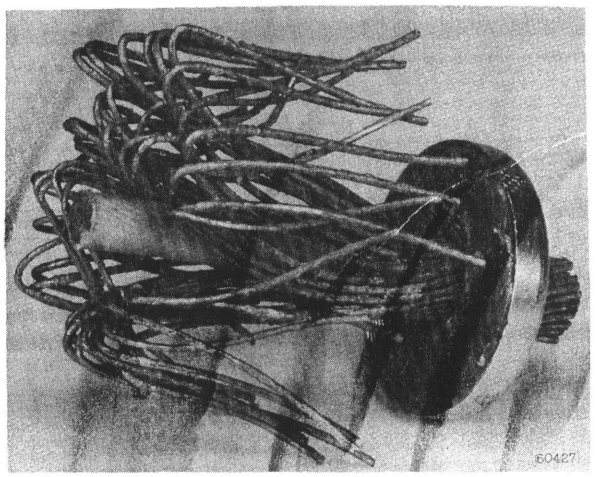

Fig. 11 - Low-melt-temperature alloy potted terminal with the alloy melted out to show assembly treatment of wire ends

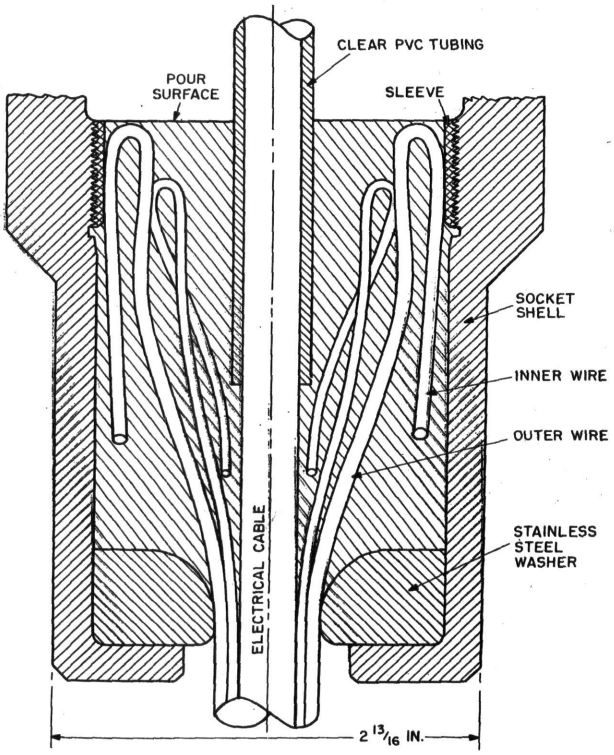

Fig. 12 - NRL potted type socket

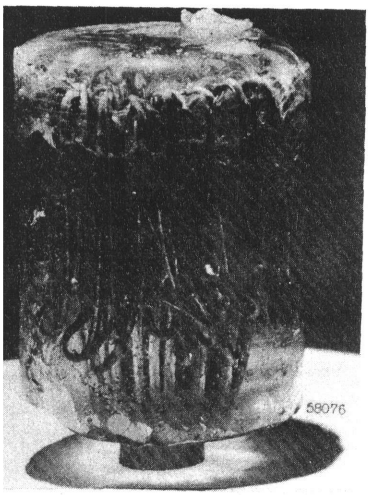

Fig. 13 - Epoxy-potted terminal with two 180-degree bends in each wire

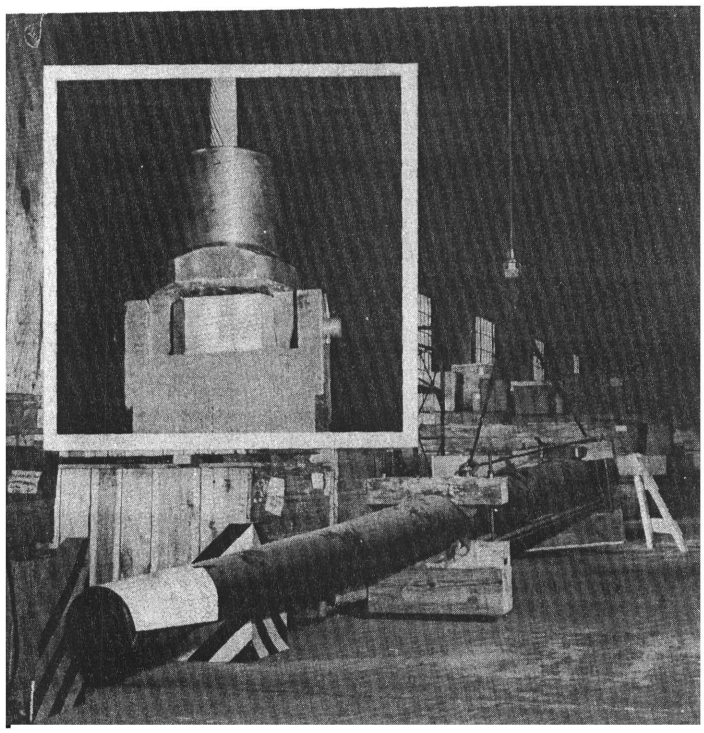

Fig. 14 - NRL poured epoxy terminal creep test.
The gun barrel weighs 10,000 lb.

to remove the preformed spiral set in during manufacture. Single-wire pull tests showe that the epoxy adheres as well to the zinc-coated wire as to bare steel wires which have had the zinc coat stripped off. For preparation, the wire ends are merely washed in degreasing fluid and water flushed. Assembly of this socket can be accomplished in two hours.

To allay our fears concerning creep of the epoxy, a 600-hour creep test was performed on an epoxy-potted socket. Figure 14 shows a 10,000 lb rifle barrel suspended two inches from the floor. During those 600 hours in the unheated warehouse the ambier temperatures varied daily between 30° and 60°F. If any creep existed, it was not measurable within 1/64 in. This socket has been used at sea in several operations with good results.

Low-Melt-Temperature Alloy Sockets – Tests for the low-melt-temperature alloy sockets similar to those for the epoxy cast system were performed. Results of pull-strength tests on this type of socket show that the full strength of the cable can be developed. The ease of pouring this socket coupled with long pot life make this type of assembly most desirable. Figure 11 shows the armor wire configuration after having been melted out of a socket housing.

OTHER SOCKETS

Figures 15, 16, 17, 18, and 19 are sketches of sockets in use by organizations other than NRL. No assessment of their relative merits is offered. The sketches are presented merely to show the variety of socket designs in use today.

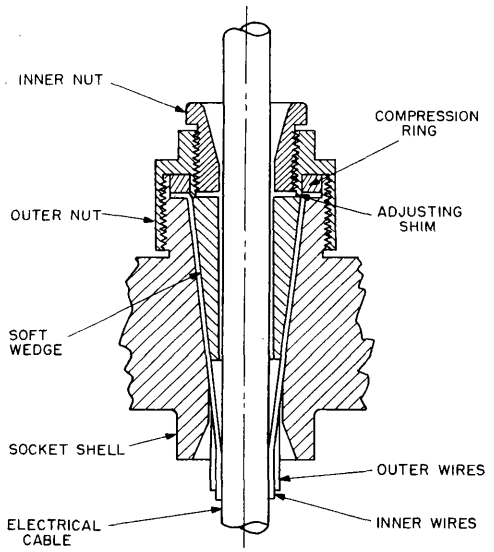

Fig. 15 - Truncated-cone type socket (courtesy NRE, Canada)

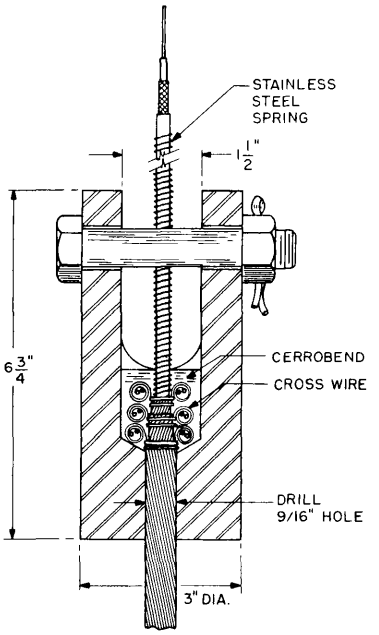

Fig. 16 - Poured (metal alloy) type socket (courtesy Hudson Labs.)

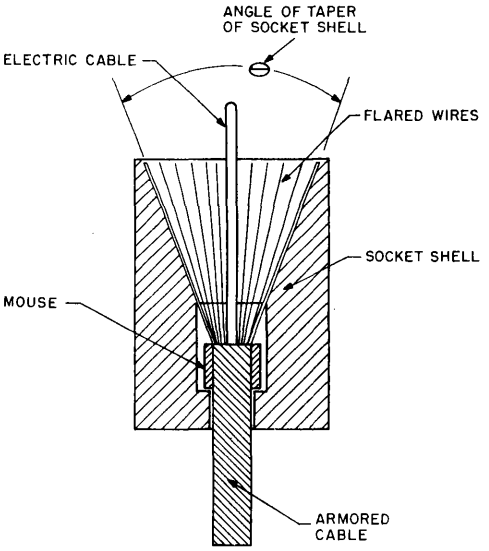

Fig. 17 - Poured (metal alloy) type socket (courtesy DTMB)

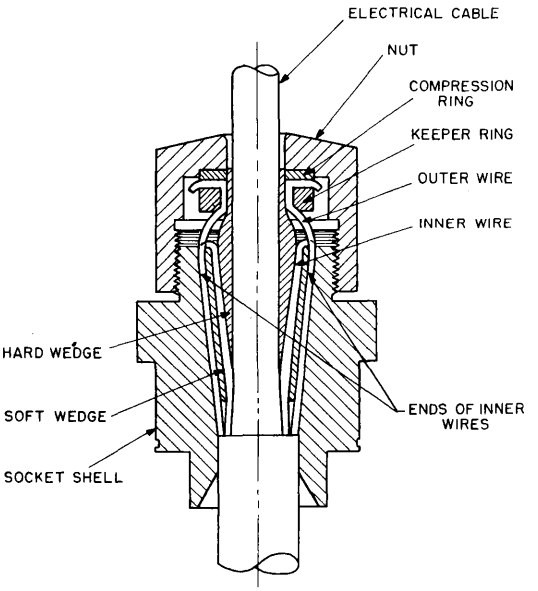

Fig. 18 - Double truncated cones type socket (courtesy USNUSL)

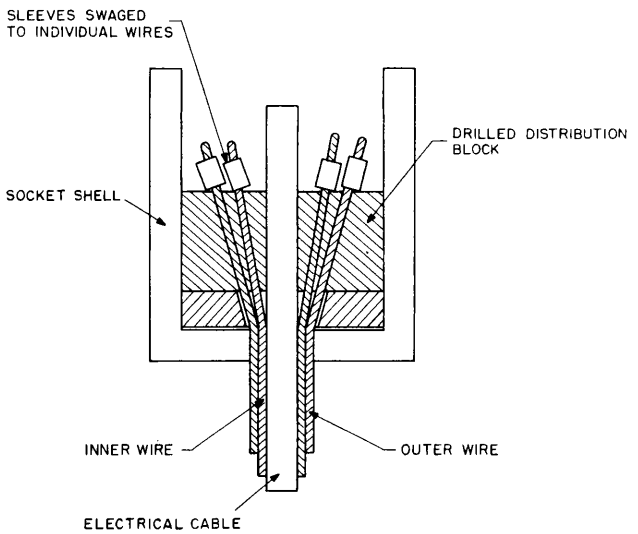

Fig. 19 - Swaged-wire type socket
(industrial design)

Table 1
Strain Test Results on NRL Sockets
Breaking Strength of 0.68-in.-diameter
Coaxial Cable Approximately
Equals 33,500 lb

Description of Socket Type	Load at Failure (lb)	Failure Occurred
Seven washer	27,900	Outside of socket
Five washer-serrated brass	29,000	Outside of socket
Five washer-smooth brass	31,350	Outside of socket
Five washer-serrated steel	33,000	Outside of socket
Five washer-serrated steel after 2 wks service at sea	28,700	At socket
Five washer-serrated steel after 2 days service at sea	31,000	At socket
Epoxy potted (2 in. wetted)	30,900	At socket
Epoxy potted (180° bend)	32,000	Outside of socket
Metal alloy potted	28,000	Outside of socket
Industrial type "A"	21,600 21,600	At socket
Industrial type "B"	19,350 16,350	Wire slipped out of socket

In Table 1 there appear test results of two sockets listed as industrial "A" and industrial "B." These sockets were tested on a cooperative basis with two different manufacturers and are not necessarily the ones being offered by these manufacturers at the present time.

TEST RESULTS

Two armored electric cables are in general use by NRL at the present time. The armor of one cable comprises 42 wires of the same diameter in two layers. The inner layer has 18 wires, the outer layer has 24 wires (Fig. 20). The calculated breaking strength of this 0.57-in.-diameter cable is 28,500 lb. The second cable has 48 armor wires in two layers with 24 wires in each layer (Fig. 20). The calculated breaking strength of this 0.68-in.-diameter cable is 33,500 lb.

Table 2 refers to tests conducted with the 0.57-in.-diameter cable, and Table 1, to the 0.68-in.-diameter cable. The socket-load test setup is shown in Fig. 21. The socket under test is attached to the lower crosshead. The other end of the cable is restrained by a "U"-bolt clamping arrangement using a single bight or loop. In some of the tests, both ends of the cable were assembled with sockets. In all tests the applied load rate was 2000 lb per minute. Some typical load-elongation curves are shown in Figs. 22, 23, 24, and 25. Figures 4 and 5 show typical failure modes of cables for the five-washer design. As can be seen in these two plates, the point of maximum stress was at the beginning of the first bend. In Fig. 4 evidence of stress corrosion is plainly visible. Unless a method of excluding the sea water from the socket is incorporated, the mechanically assembled terminals will require frequent changes. If the results shown in Table 2 are typical for those sockets which were tested after having been in service, the use of mechanically assembled sockets is to be discouraged.

CONCLUSIONS

Mechanically Assembled Sockets (NRL Types)

The five-washer design with serrated surface steel washers is the best of the mechanically assembled variety developed. This design is not limited by cable diameter size nor armor wire sizes. The socket can be assembled by semiskilled technicians in approximately three hours. The socket has been field tested satisfactorily. This socket can develop more than 95 percent of the full cable strength before failure.

Potted or Poured Sockets (NRL Types)

The low-melt-temperature-alloy poured socket is considered preferable to the potted epoxy resin assembly. While each requires about the same assembly time – two to three hours – the metal alloy socket can be used immediately, whereas the epoxy requires several hours of curing time in order to develop a reasonable amount of strength. About 24 hours is required for the epoxy system to develop 95 percent of full strength. Another important factor is the shelf life of the potting ingredients. Epoxy systems have a relatively short shelf life. The metal alloys may be considered to have an indefinite life. The pot life of the epoxy system is short. The alloy requires no special attention as regards to storage temperature or humidity. Further, the alloy can be reused as often as desired. The alloy is economically and logistically superior to epoxy systems. The effect of corrosion in the salt-water environment of the alloy-poured socket has not been evaluated. Of all NRL socket types discussed, the authors' preference is for the use of the low-melt-temperature alloy socket. This type socket has been used at sea for more than a year, with good results.

ACKNOWLEDGMENTS

The cooperation of the Shock and Vibration Branch, and the Strength of Metals Branch is gratefully acknowledged, for accomplishing all the tensile tests reported here.

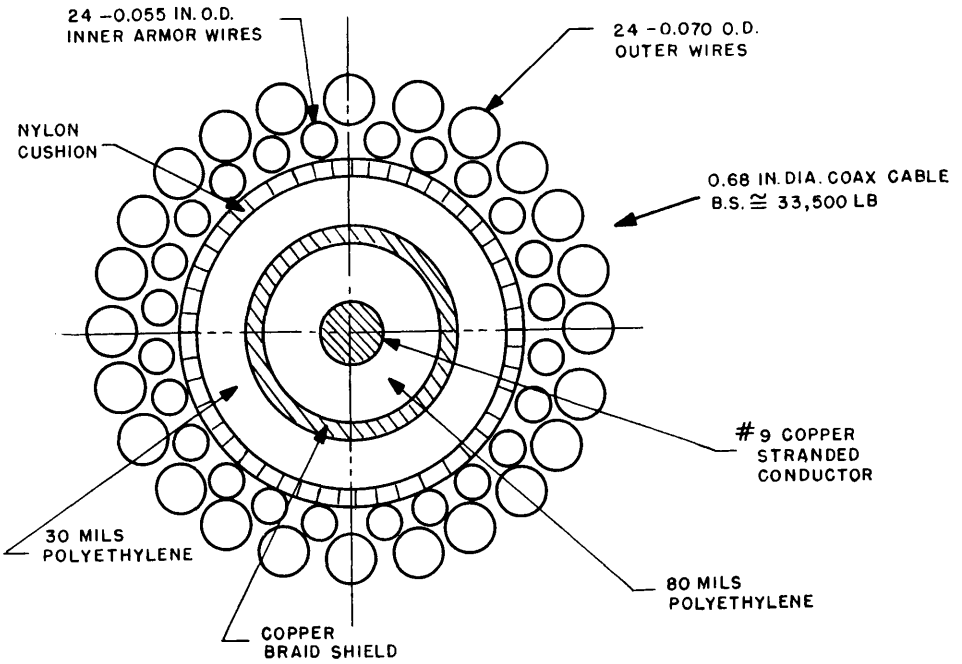

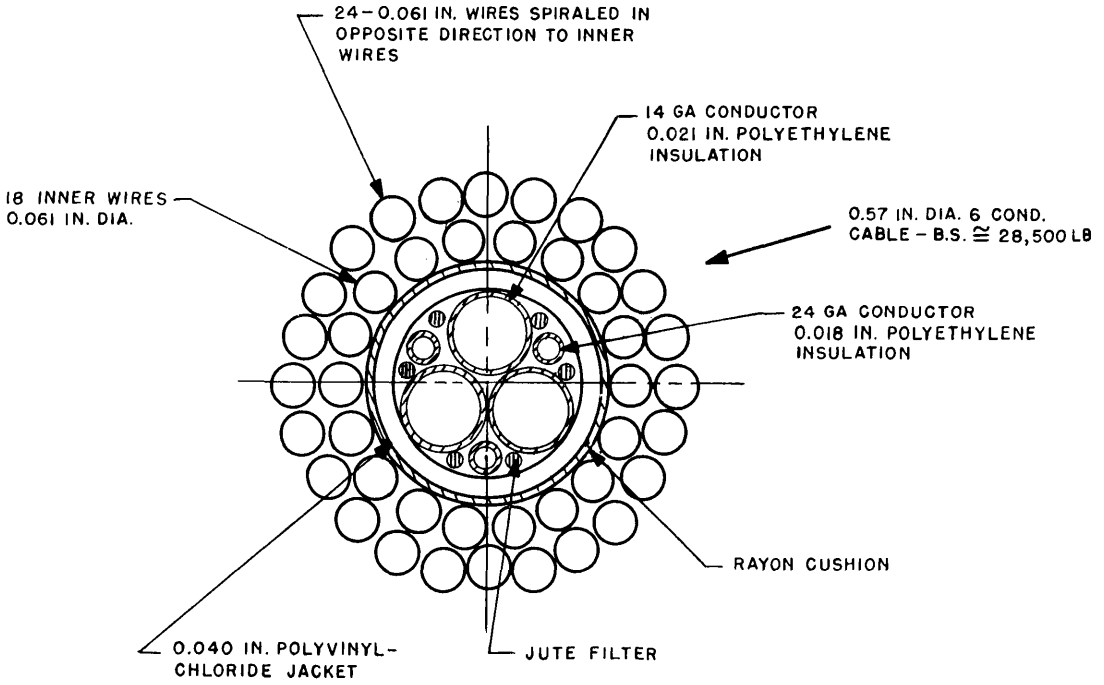

Fig. 20 - Cross section of cables used at NRL

Table 2
Strain Test Results on NRL Sockets
Breaking Strength of 0.57-in.-diameter Cable
Approximately Equals 28,500 lb

Description of Socket Type	Load at Failure (lb)	Failure Occurred
Truncated cone	29,100	Outside of socket
Truncated cone after 3 days of service at sea	25,700	At socket
Seven washer	19,150	At socket
Five washer	23,450	At socket

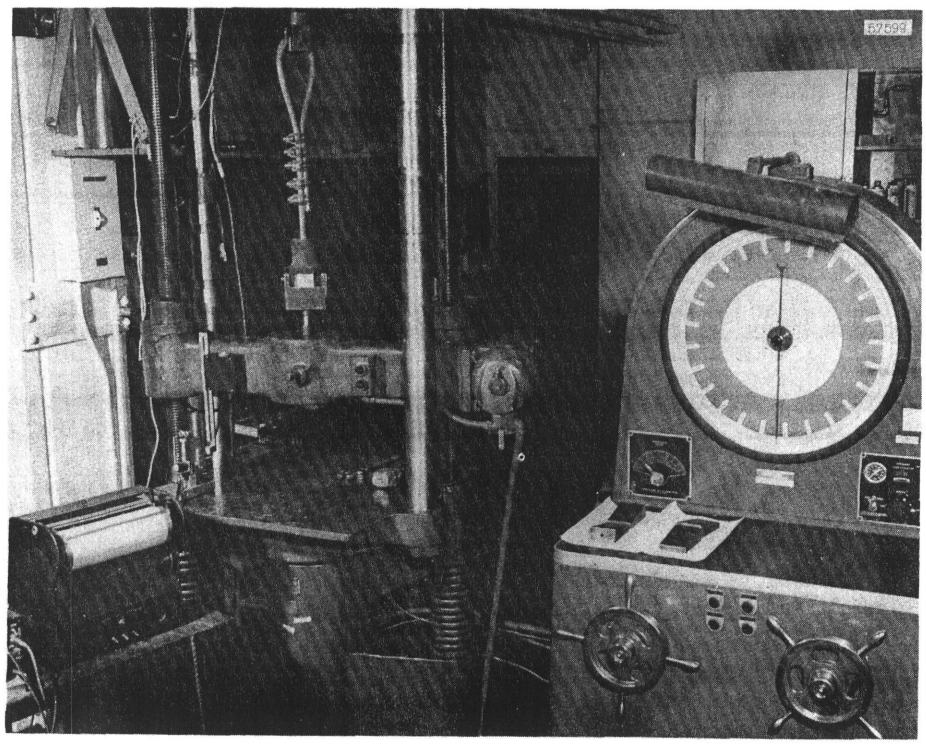

Fig. 21 - BLH 60,000-lb Universal Testing Machine with specimen ready to be tested

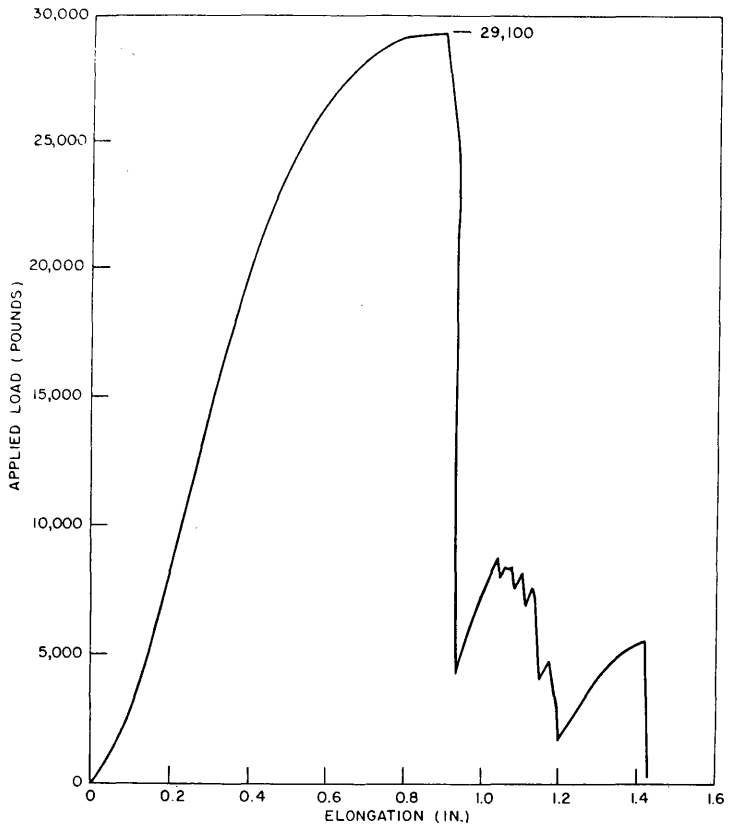

Fig. 22 - Pull test on 0.57-in.-diameter cable with truncated-cone type socket

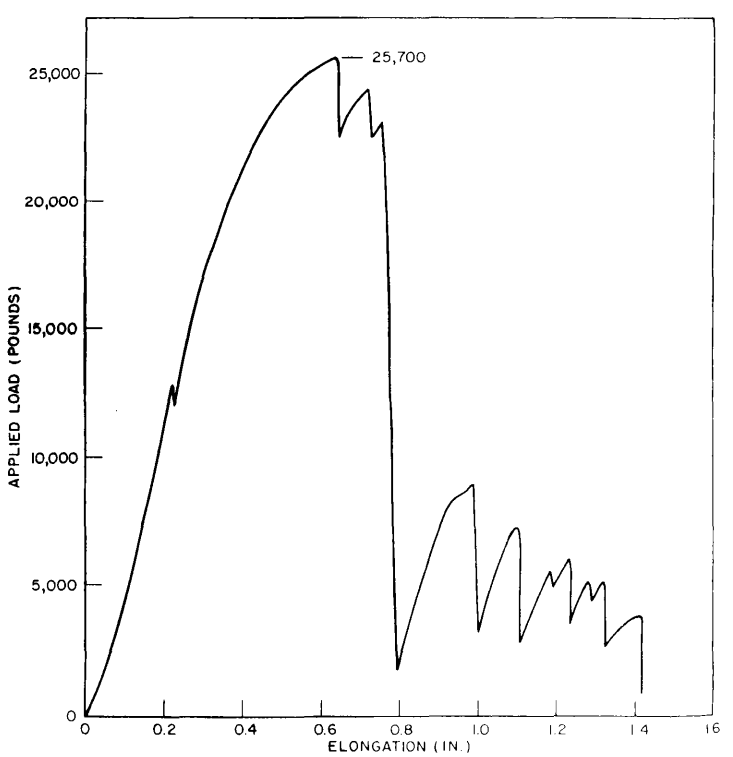

Fig. 23 - Pull test on 0.57-in.-diameter cable with truncated cone type socket

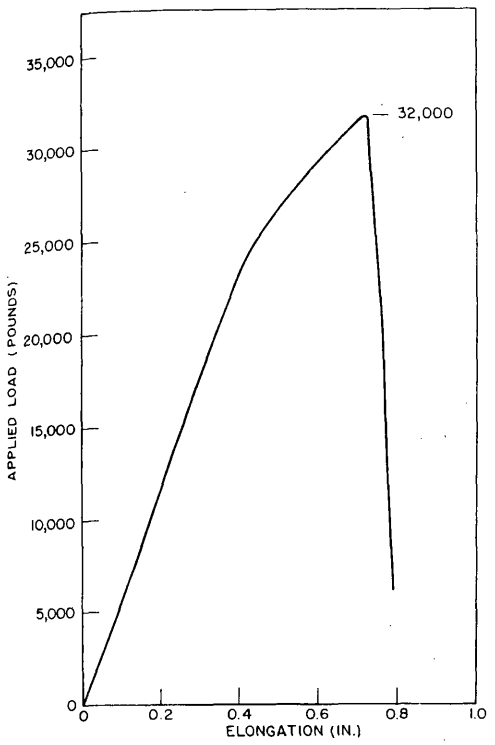

Fig. 24 - Pull test on 0.68-in.-diameter cable with poured epoxy type socket

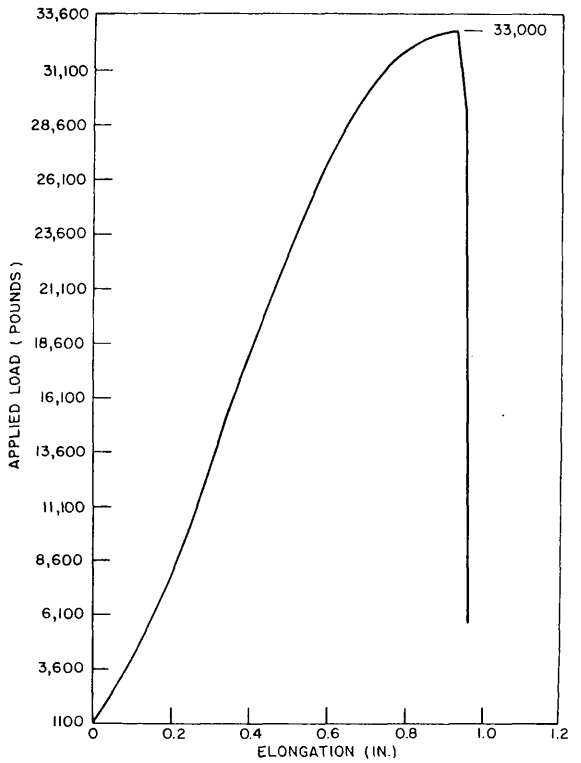

Fig. 25 - Pull test on 0.68-in.-diameter cable using the five-washer type socket

BIBLIOGRAPHY

1. Hills, F.D., "An Effective Method of Gripping Short Specimens of Wire Strand for Tensile Tests," J. Sci. Instr. 32:33 (1955)

2. Gay, S.M., Jr., "Modification of the Disk-nose Air-towed Sonar Housing," USN David Taylor Model Basin Report 1157, July 1957

3. Rakoff, F.B., "The Development of an End Fitting for the AN/SQS-17 Electromechanical Two Cable," USN Underwater Sound Laboratory, 1958

4. Ess, J.O., "Thresher Deep-Sea Towing Operation" (U), Proc. 21st Navy Symposium on Underwater Acoustics, ONR Symposium Report ACR-87, Vol 2 (Confidential Report, Unclassified Title), pp. 653-666, Dec. 1963

5. "Wire Rope Engineering Handbook," American Steel and Wire Division of U.S. Steel Corp., 1946

Security Classification

DOCUMENT CONTROL DATA - R&D

(Security classification of title, body of abstract and indexing annotation must be entered when the overall report is classified)

1. ORIGINATING ACTIVITY *(Corporate author)* U.S. Naval Research Laboratory Washington, D.C. 20390	2a. REPORT SECURITY CLASSIFICATION Unclassified 2b. GROUP

3. REPORT TITLE

LOAD-CARRYING TERMINALS FOR ARMORED ELECTRIC CABLES

4. DESCRIPTIVE NOTES *(Type of report and inclusive dates)*

An interim report on one phase of the problem.

5. AUTHOR(S) *(Last name, first name, initial)*

Czul, E.C., and Gennari, J.J.

6. REPORT DATE August 31, 1965	7a. TOTAL NO. OF PAGES 22	7b. NO. OF REFS 0
8a. CONTRACT OR GRANT NO. NRL Problem S01-08 b. PROJECT NO. SF 001-03-20-8057 c. d.	9a. ORIGINATOR'S REPORT NUMBER(S) NRL Report 6261 9b. OTHER REPORT NO(S) *(Any other numbers that may be assigned this report)*	

10. AVAILABILITY/LIMITATION NOTICES

Unlimited availability – Available at CFSTI – $1.00

11. SUPPLEMENTARY NOTES	12. SPONSORING MILITARY ACTIVITY Dept of the Navy (BuShips)

13. ABSTRACT

Four load-carrying terminals, or sockets, for use with armored electric tow cables, have been designed, developed, and tested at NRL. Two of these designs are mechanically assembled, and two are potted, or cast. In the mechanically assembled design, the attachment of the socket to the load-carrying wires is achieved by mechanically gripping the armor wires between force-fitted friction surfaces. The potted designs use a low-melt-temperature alloy or an epoxy compound which intimately flow about the armor wires. After hardening, the socket is ready for use.

The mechanically assembled socket can develop more than 95 percent of the full cable strength before failing; it has been field tested satisfactorily. However, of all the NRL socket types discussed, the authors' preference is for the low-melt-alloy potted type. This type socket has been used at sea for more than a year with good results. The major advantage of this type socket is the ease and speed with which it can be replaced by field workers.

For information purposes, a few socket designs used by organizations other than NRL have been illustrated and discussed.

DD FORM 1 JAN 64 1473

Security Classification

14. KEY WORDS	LINK A ROLE	LINK A WT	LINK B ROLE	LINK B WT	LINK C ROLE	LINK C WT
Cable assemblies						
Cables (mechanical)						
Electric cables						
Towing cables						
Deep-sea equipment						
Oceanographic equipment						

INSTRUCTIONS

1. ORIGINATING ACTIVITY: Enter the name and address of the contractor, subcontractor, grantee, Department of Defense activity or other organization *(corporate author)* issuing the report.

2*a*. REPORT SECURITY CLASSIFICATION: Enter the overall security classification of the report. Indicate whether "Restricted Data" is included. Marking is to be in accordance with appropriate security regulations.

2*b*. GROUP: Automatic downgrading is specified in DoD Directive 5200.10 and Armed Forces Industrial Manual. Enter the group number. Also, when applicable, show that optional markings have been used for Group 3 and Group 4 as authorized.

3. REPORT TITLE: Enter the complete report title in all capital letters. Titles in all cases should be unclassified. If a meaningful title cannot be selected without classification, show title classification in all capitals in parenthesis immediately following the title.

4. DESCRIPTIVE NOTES: If appropriate, enter the type of report, e.g., interim, progress, summary, annual, or final. Give the inclusive dates when a specific reporting period is covered.

5. AUTHOR(S): Enter the name(s) of author(s) as shown on or in the report. Enter last name, first name, middle initial. If military, show rank and branch of service. The name of the principal author is an absolute minimum requirement.

6. REPORT DATE: Enter the date of the report as day, month, year; or month, year. If more than one date appears on the report, use date of publication.

7*a*. TOTAL NUMBER OF PAGES: The total page count should follow normal pagination procedures, i.e., enter the number of pages containing information.

7*b*. NUMBER OF REFERENCES: Enter the total number of references cited in the report.

8*a*. CONTRACT OR GRANT NUMBER: If appropriate, enter the applicable number of the contract or grant under which the report was written.

8*b*, 8*c*, & 8*d*. PROJECT NUMBER: Enter the appropriate military department identification, such as project number, subproject number, system numbers, task number, etc.

9*a*. ORIGINATOR'S REPORT NUMBER(S): Enter the official report number by which the document will be identified and controlled by the originating activity. This number must be unique to this report.

9*b*. OTHER REPORT NUMBER(S): If the report has been assigned any other report numbers *(either by the originator or by the sponsor)*, also enter this number(s).

10. AVAILABILITY/LIMITATION NOTICES: Enter any limitations on further dissemination of the report, other than those imposed by security classification, using standard statements such as:

(1) "Qualified requesters may obtain copies of this report from DDC."

(2) "Foreign announcement and dissemination of this report by DDC is not authorized."

(3) "U. S. Government agencies may obtain copies of this report directly from DDC. Other qualified DDC users shall request through _____."

(4) "U. S. military agencies may obtain copies of this report directly from DDC. Other qualified users shall request through _____."

(5) "All distribution of this report is controlled. Qualified DDC users shall request through _____."

If the report has been furnished to the Office of Technical Services, Department of Commerce, for sale to the public, indicate this fact and enter the price, if known.

11. SUPPLEMENTARY NOTES: Use for additional explanatory notes.

12. SPONSORING MILITARY ACTIVITY: Enter the name of the departmental project office or laboratory sponsoring *(paying for)* the research and development. Include address.

13. ABSTRACT: Enter an abstract giving a brief and factual summary of the document indicative of the report, even though it may also appear elsewhere in the body of the technical report. If additional space is required, a continuation sheet shall be attached.

It is highly desirable that the abstract of classified reports be unclassified. Each paragraph of the abstract shall end with an indication of the military security classification of the information in the paragraph, represented as *(TS)*, *(S)*, *(C)*, or *(U)*.

There is no limitation on the length of the abstract. However, the suggested length is from 150 to 225 words.

14. KEY WORDS: Key words are technically meaningful terms or short phrases that characterize a report and may be used as index entries for cataloging the report. Key words must be selected so that no security classification is required. Identifiers, such as equipment model designation, trade name, military project code name, geographic location, may be used as key words but will be followed by an indication of technical context. The assignment of links, roles, and weights is optional.