UNCLASSIFIED

NRL Report 6061

An X-Ray Fluorescence Camera

A. J. Pollard

High Temperature Alloys Branch
Metallurgy Division

March 20, 1964

U.S. NAVAL RESEARCH LABORATORY
Washington, D.C.

Copies available from Office of Technical Services
Department of Commerce — $.50

An X-Ray Fluorescence Camera

A. J. Pollard

High Temperature Alloys Branch
Metallurgy Division

An x-ray fluorescence camera has been designed as a companion piece to the x-ray powder-diffraction camera. It is possible with this device to detect elements with an atomic number of 19 (potassium) and above. Quantitative determinations may be made using film-transmittance measurements similar to those used in quantitative analysis by powder techniques. The camera case has been constructed in such a way that it can be evacuated. A mechanism has been included which permits the examination of specimens just large enough to give ordinary powder patterns on film.

A need arose for the qualitative analysis of specimens sufficiently large to give x-ray powder patterns but too small to be sampled for chemical analysis and too valuable to be sacrificed in an emission spectrograph. To satisfy this need an x-ray spectrograph was constructed. In order to increase the versatility of the instrument, provision was made for the use of specimens of a variety of shapes and sizes, up to a maximum of about 1 in. on an edge, and a device was constructed for the scanning of the fluorescence spectra of powder specimens still in place in their x-ray diffraction mounts.

The x-ray spectrograph uses principles described and used by Birks and Brooks* (Fig. 1). Specimens are placed in a plane adjacent to a fixed crystal, such as lithium fluoride or sodium chloride, and the x-ray fluorescence, which is emitted due to irradiation by an intense primary x-ray beam of a certain quality, is diffracted through the crystal and onto a strip of photographic film in a fixed position nearby. For the present investigation the primary x-rays are obtained from a tube with a tungsten target, operated at 50 kv and 18 ma, giving satisfactory exposures in about 1 hour.

The camera is cylindrical with an external diameter of 5 in. and a 2-in. thickness. The internal dimensions are such that the distance of diffracted lines from the zero angle is measured in degrees (1 mm equals 1 degree) and is a function of the wavelength of the x-rays emitted by the specimens. Theta angles from 5 degrees to as high as 78 degrees have been measured.

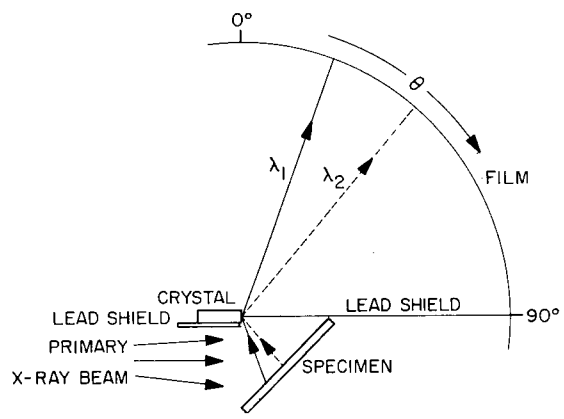

Fig. 1 — Principle of fixed-crystal x-ray spectrograph

Three types of specimen holders are being used. One makes use of wafers 1 in. in diameter, which are pressed from mixtures of the powdered samples with methyl cellulose, using conventional metallurgical-specimen dies (Fig. 2a). Squares or circles cut from sheet metal may also be slipped into this holder, or blotting paper containing absorbed solutions may be used.

Another holder has spring clips which force the surfaces of larger specimens against two plates which define the edges of the primary x-ray beam (Fig. 2b). Specimens with dimensions of a maximum of 1/2 in. by 1 in. by 1 in. can be held securely in this mount.

The third holder is for small specimens suitable for x-ray powder-diffraction analysis and supported on the conventional 1/8-in. brass rod and quartz fiber (or the equivalent). Since it is necessary for portions of the specimen being examined to spend a significant time in the unique positions in which the emitted radiation is diffracted by the analyzing crystal, small specimens must be moved

NRL Problem C01-10; Project SR 007-08-04-0617. This is a final report on one phase of the problem; work on other phases continues. Manuscript submitted December 27, 1963.

*L. S. Birks and E. J. Brooks, *Anal. Chem.* 27:1147-1149 (1955).

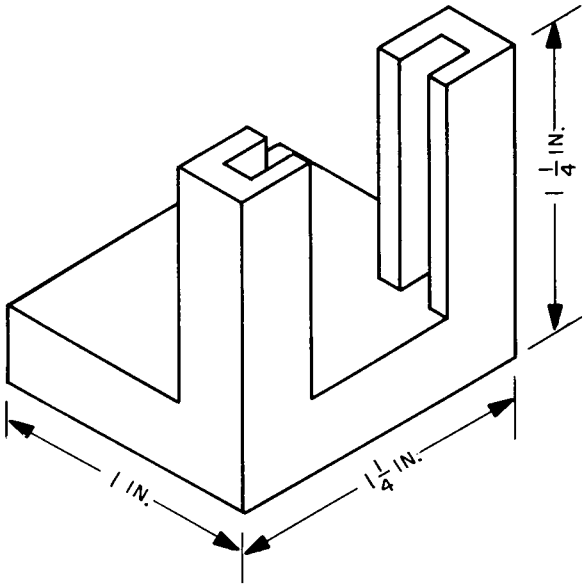

Fig. 2a — Aluminum holder for wafers, squares, and powder mounts

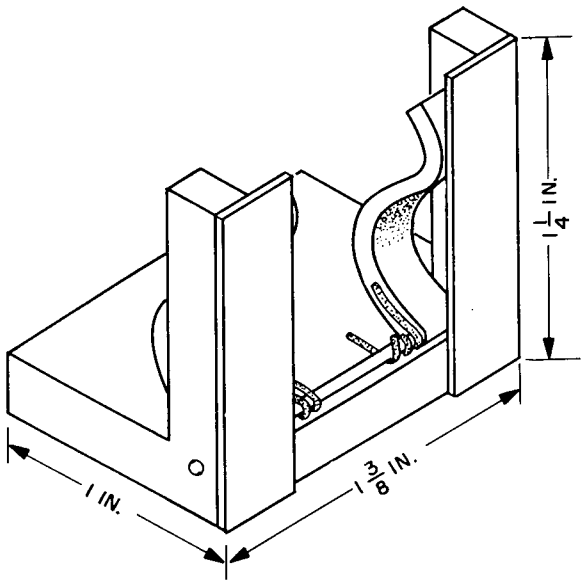

Fig. 2b — Holder for specimens with maximum dimension of 1/2 in. by 1 in. by 1 in. (Spring clips of aluminum, front plates of 1/16-in. ground steel soldered in place, body of mount of brass.)

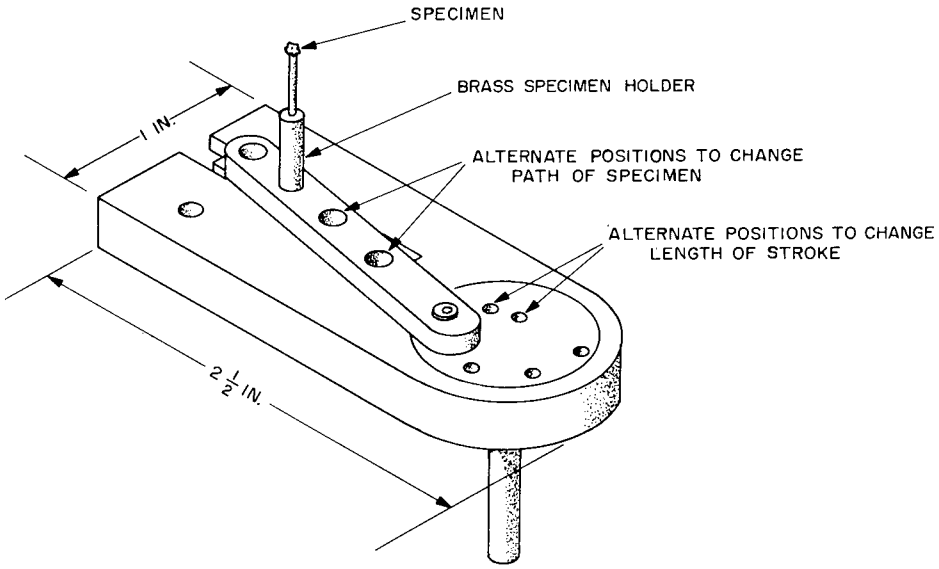

Fig. 2c — Device to move small specimen on glass fiber through primary x-ray beam. This is actuated by pulley on outside of camera.

through all such positions while being irradiated by the primary x-ray beam. This is accomplished through the use of a linkage actuated from outside the camera (Figs. 2c and 1). The length of travel can be changed in increments from 1/4 in. to 3/4 in., equivalent to diffraction-angle ranges from 20 degrees to 60 degrees. The specimen mount may be placed in any of four positions, permitting a choice of oscillation path which leads to short photographic exposure times.

Bulk specimens too large for mounting in any of these three holders must be clamped or taped into place with a surface near the crystal and irradiated by the primary x-ray beam.

For convenience of manipulation the spectrograph and specimen holders were adapted to the removable lid of the camera case, and the entrance port for the primary x-ray beam, the light-tight closure (black paper), and the lead baffle, which defines the shape of the x-ray beam, were incorporated in the case (Figs. 3 and 4). The relative orientation of the camera case and spectrometer is fixed by means of a pin, and the lid is held in place by a snugly fitting gasket, while a thin rubber gasket between the lid and the camera case makes the unit sufficiently airtight. Film is supported between a fixed pin and a spring clip on the circumference of the camera body. With this arrangement it is possible to load or unload samples and film in less than 1 minute.

The image that appears on the developed film is due entirely to spectrometer parts which move together as a unit (Fig. 4). For this reason it was possible to place an adjustable knife edge at the outer rim of the spectrometer arc in such a way that the shadow of this cutoff point coincides with the zero angle of the instrument, and readings (in millimeters) between a diffracted line and this shadow are in degrees θ without further correction.

The crystal holder has in it four set screws, the inner two holding the crystal in place and the outer two holding the shield, which controls the effective surface of the crystal. It was found that cleaved crystals from 1/4 in. long to 1-1/4 in. long are satisfactory, and that thicknesses from 1/64 in. to 1/4 in. are effective. When lithium fluoride was used, a series of circular

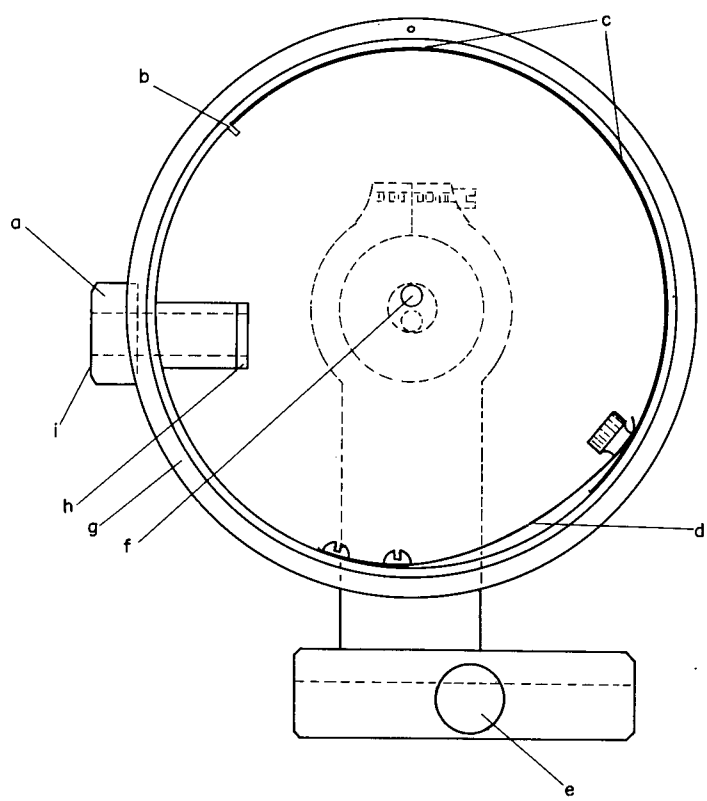

Fig. 3 — Camera body and pedestal
a. Entrance port for primary beam
b. Fixed steel pin
c. Photographic film
d. Film retainer
e. Knurled thumb screw
f. Port for outgassing
g. Thin rubber gasket
h. Lead diaphragm
i. Opaque paper closure

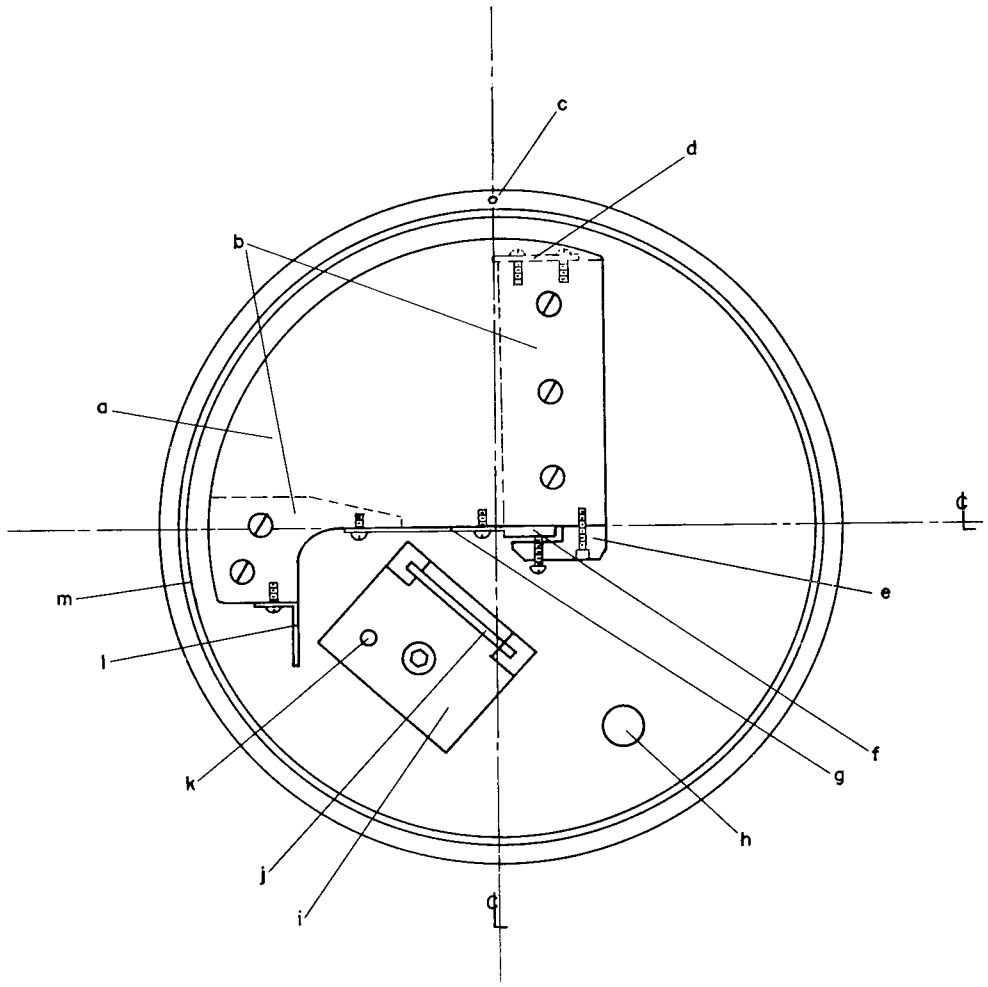

a. Spectrometer sector (5/16-in. plates)
b. Spacers (Initially 3/4-in. square)
c. Steel index pin
d. Steel plate for zero adjustment
e. Crystal support
f. Diffracting crystal
g. Lead shield
h. Port for drive mechanism (Plugged when not in use)
i. Specimen holder (See Fig. 2a)
j. Specimen
k. Alternate location of hold-down screw
l. Leaded-brass x-ray check
m. Rubber gasket in groove on perimeter

Fig. 4 — Camera lid and spectrometer

UNCLASSIFIED

arcs caused by diffraction from planes other than the 100 cleavage plane was an annoyance, but with sodium chloride this is not a serious problem.

Films are interpreted either by comparison with known standards or through the use of tables which give the wavelengths of x-ray emission of the elements. Since sodium chloride, with an effective d-value of 2.82 is being used, the wavelengths may be determined by the Bragg equation:

$$\lambda = \frac{2d}{n} \sin \theta$$

where

λ = the wavelength in question
d = 2.82 (for sodium chloride)
θ = the angle of diffraction, in the present case this being equal to the distance on the film between the diffracted line and the zero point
n = 1,2,3,..., the order of the diffraction.

A typical film is illustrated in Fig. 5.

The immediate research for which this instrument was developed is concerned with deposits in naval boilers, but it is expected that it will be be used without further modification for routine qualitative and quantitative analysis of elements with atomic numbers of 19 (potassium) and higher.

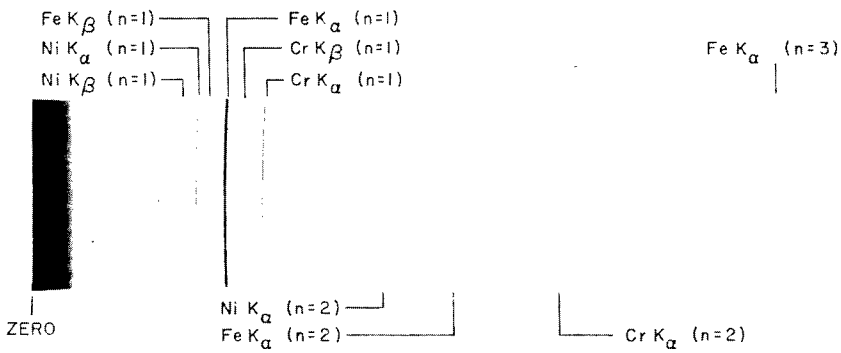

Fig. 5 — Contact print of film (reversed) showing example of spectrum obtained from a 1-in. square specimen in 1 hour (Heat No. 92: 18.7% Cr, 20.6% Ni, balance Fe)