UNCLASSIFIED

NRL Report 5972

Synthesis of Unity-Gain Complex-Zero RC Networks

CHARLES F. WHITE

Equipment Research Branch
Radar Division

August 12, 1963

U.S. NAVAL RESEARCH LABORATORY
Washington, D.C.

CONTENTS

Abstract 1
Problem Status 1
Authorization 1

BACKGROUND 1

INTRODUCTION 1

NETWORK SHORT-CIRCUIT ADMITTANCE FUNCTIONS 1

TRANSFER FUNCTIONS WITH DAMPED COMPLEX ZEROS AND NEGATIVE-REAL POLES 2

LABORATORY MEASUREMENTS 5

NETWORKS REALIZED BY EARLY PROCEDURES 6

TRANSFER FUNCTIONS WITH UNDAMPED COMPLEX ZEROS AND NEGATIVE-REAL POLES 7

SYMMETRICAL RC PARALLEL-T NETWORK 8

SUMMARY 9

ACKNOWLEDGMENTS 9

REFERENCES 9

Appendix A - Ladder Developments of α-Network and β-Network 9

Appendix B - White Network Boundary-Value Problem 11

Copies available from the Office of Technical Services
Department of Commerce—$.50

Synthesis of Unity-Gain Complex-Zero RC Networks

CHARLES F. WHITE
Equipment Research Branch
Radar Division

Resistance-capacitance networks provide filtering through insertion loss variation with frequency. For prescribed voltage transfer functions containing complex zeros and negative-real poles, known synthesis procedures lead to RC networks exhibiting an undesirable frequency-independent loss. A new network synthesis procedure is set forth and applied to obtain (a) four 7-element RC networks exhibiting damped complex zeros and (b) a 6-element RC network with undamped complex zeros of transmission. When these new networks are applicable, the prescribed transfer function is realized *exactly*, including the unity multiplicative constant. In addition, these networks have fewer elements than previous realizations.

BACKGROUND

Resistance-capacitance networks have importance throughout electronics, especially in high-performance automatic-tracking radar systems, in signal processing systems, and in the rapidly developing field of microelectronics. Collaterally, there is a general interest in improved procedures for the direct synthesis of networks from prescribed voltage transfer functions. The present report presents a new synthesis procedure used to realize so-called "notch" networks, useful in providing bandpass characteristics when used in an amplifier feedback path and in providing equalization in automatic control systems.

INTRODUCTION

In the development of procedures for the synthesis of networks directly from prescribed transfer functions, the usual approach has been to seek generality and to accept, as inevitable, such undesirable characteristics as a multiplicative constant less than unity. The somewhat different viewpoint taken here is that a network realization requiring an amplifier to compensate for flat loss does not qualify as a suitable passive network. Insistence upon a multiplicative constant of unity, however, entails acquiescence to a restriction upon the prescribed transfer function parameter space.

In the case of voltage transfer functions containing two complex-conjugate zeros of transmission and two negative real poles (a function important in servosystem equalization), the synthesis of resistance-capacitance networks by either of two previous methods leads to networks with an undesirable frequency-independent loss. In a typical instance, the Guillemin (1) parallel-ladder procedure leads to a network with ten elements. In the transfer function there are five constraints to be met: two poles, two zeros, and the constant multiplier. If a canonic circuit existed, i.e., one with the same number of elements (adjustable parameters) as the number of imposed constraints specifying the required performance, the circuit would contain five elements rather than ten. The Dasher (2) procedure, using a bridged twin-T structure, typically results in networks with nine or, in some cases, eight elements. With both procedures the usual result is a rather large flat loss.

The synthesis procedures to be presented are based on an insistence upon an exact realization of the prescribed transfer function including the multiplicative constant. The resulting networks have an additional advantage of having fewer elements than those derived using the other applicable procedures. The extent of an associated restriction upon the prescribed transfer function parameter space is specified and examined.

A brief preliminary statement of the basic network theory related to the use of admittance function is given in the following section to simplify the presentation of the synthesis procedure.

NETWORK SHORT-CIRCUIT ADMITTANCE FUNCTION

Measurements (or computations) made upon a network under the short-circuited conditions

NRL Problem R05-04. This is a final report on one phase of the problem; work is continuing on the basic problem. Manuscript submitted May 21, 1963.

shown in Fig. 1 permit determination of the short-circuit admittance functions* listed in Table 1. In matrix form

$$\begin{bmatrix} I_1 \\ I_2 \end{bmatrix} = \begin{bmatrix} y_{11} & y_{12} \\ y_{21} & y_{22} \end{bmatrix} \cdot \begin{bmatrix} E_1 \\ E_2 \end{bmatrix}. \tag{1}$$

For unbalanced two terminal-pair networks in parallel, as in Fig. 2, the admittance parameters add. Designating the two networks as α and β, we may write

$$\begin{bmatrix} I_1 \\ I_2 \end{bmatrix} = \begin{bmatrix} y_{11\alpha} + y_{11\beta} & y_{12\alpha} + y_{12\beta} \\ y_{21\alpha} + y_{21\beta} & y_{22\alpha} + y_{22\beta} \end{bmatrix} \begin{bmatrix} E_1 \\ E_2 \end{bmatrix}. \tag{2}$$

For the case of open-circuited output terminals, the voltage transfer function is expressed in terms of the short-circuit admittance parameters by

$$\frac{E_2}{E_1} = \frac{-y_{12}}{y_{22}}. \tag{3}$$

For the conditions of Fig. 2,

$$\frac{E_2}{E_1} = -\frac{y_{12\alpha} + y_{12\beta}}{y_{22\alpha} + y_{22\beta}}. \tag{4}$$

The network relationships stated above are fundamental to the synthesis procedure presented in the following paragraphs.

*For a complete discussion of material presented in this section see, for instance, M.E. Van Valkenburg, "Introduction to Modern Network Synthesis," New York: Wiley, 1960.

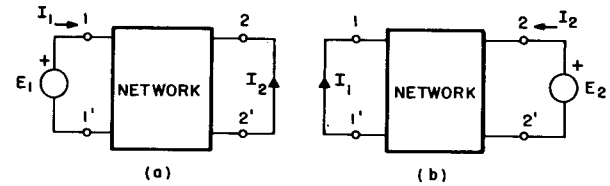

Fig. 1 - Network arrangements for defining (a) y_{11} and y_{21} and (b) y_{22} and y_{12}

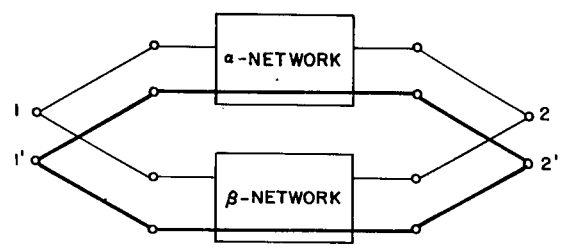

Fig. 2 - Unbalanced two terminal-pair networks in parallel. The y-parameters add as indicated in Eq.(4).

TRANSFER FUNCTIONS WITH DAMPED COMPLEX ZEROS AND NEGATIVE-REAL POLES

A voltage transfer function containing two zeros and two poles has the form

$$\frac{E_2}{E_1} = \frac{s^2 + As + B}{s^2 + Cs + D}, \tag{5}$$

TABLE 1
Network Short-Circuit Admittance Parameters

Admittance Parameter	Symbol	Definition	Network Terminal-Pair Short-Circuited
Input	y_{11}	$\left.\frac{I_1}{E_1}\right\|_{E_2=0}$	Output
Forward transfer	y_{21}	$\left.\frac{I_2}{E_1}\right\|_{E_2=0}$	Output
Reverse transfer	y_{12}	$\left.\frac{I_1}{E_2}\right\|_{E_1=0}$	Input
Output	y_{22}	$\left.\frac{I_2}{E_2}\right\|_{E_1=0}$	Input

where E_1 = input voltage; E_2 = output voltage; $s \equiv \sigma + j\omega$, the Laplace complex frequency variable, where σ = the abscissa of absolute convergence, $j = \sqrt{-1}$, and ω = natural angular frequency in radians per second; and A, B, C, and D are positive real constants. Restriction to damped complex zeros and negative-real poles is expressed by the series of inequalities

$$0 < A^2 < 4B < 4D < C^2 . \tag{6}$$

(Networks with such characteristics have importance in servosystem equalization of the rise at the system lowest natural resonant frequency.) Anticipating a realization through two networks in parallel, we separate both the numerator and denominator of Eq. (5) into two parts as follows:

$$\frac{E_2}{E_1} = \frac{s^2 + A\left(s + \frac{B}{A}\right)}{s(s + C - h) + h\left(s + \frac{D}{h}\right)}, \tag{7}$$

where the separation parameter h is a nonzero positive constant. We now presume a factor $(s + p_1)$ in order to allow the following identifications:

$$\alpha - \text{Network} \begin{cases} -y_{12\alpha} = \dfrac{s^2}{s + p_1} & (8) \\[2ex] y_{22\alpha} = \dfrac{s(s + C - h)}{s + p_1} & (9) \end{cases}$$

$$\beta - \text{Network} \begin{cases} -y_{12\beta} = \dfrac{A\left(s + \frac{B}{A}\right)}{s + p_1} & (10) \\[2ex] y_{22\beta} = \dfrac{h\left(s + \frac{D}{h}\right)}{s + p_1}. & (11) \end{cases}$$

For an RC-network realization requiring both the lowest critical frequency to be a zero and the alternation of zeros and poles, the following sequence is required:

$$D/h < p_1 < C - h. \tag{12}$$

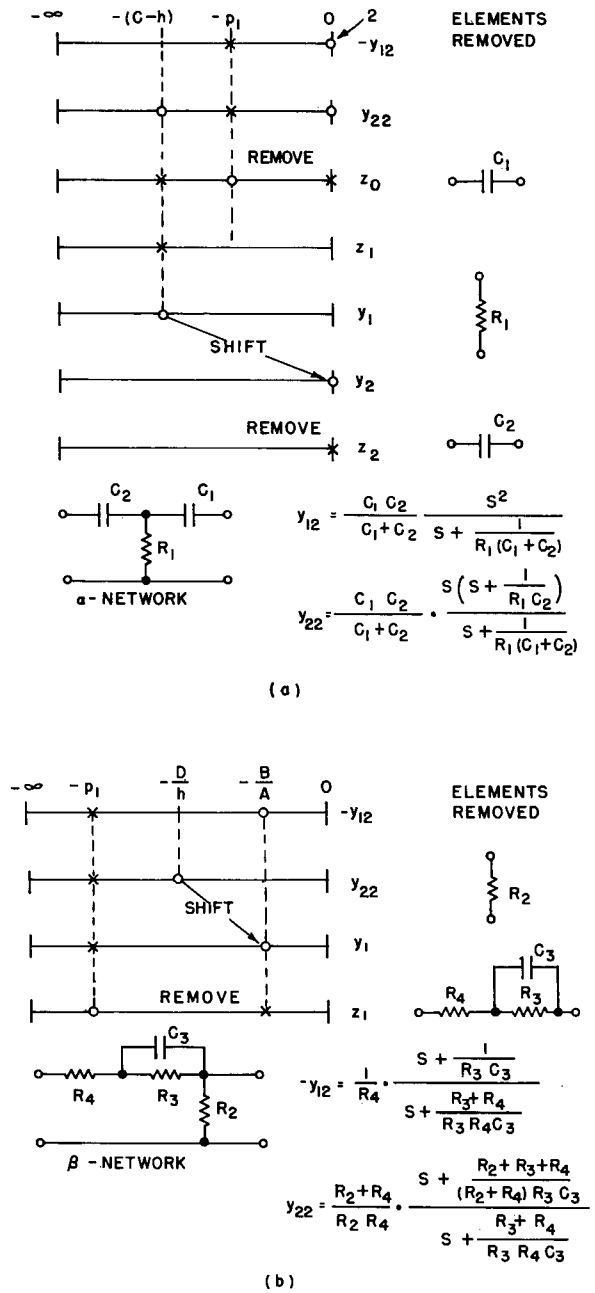

Fig. 3 - (a) The α-network realization and (b) the β-network realization

The details of a ladder realization of both the α- and the β-network are given in Appendix A. As shown in Fig. 3, an exact realization of the prescribed transfer function is obtained for the α-network. Such is not the case, however, in the β-network realization (Fig. 3(b)). The procedure

at this point is to set the desired multiplicative constant A/h equal to the realized expression. Thus,

$$\frac{A}{h}=\frac{p_1-(D/h)}{p_1-(B/A)},$$

or, solving for the pole, we find

$$p_1=\frac{D-B}{h-A}. \tag{13}$$

We may now rewrite the transfer function parameter space restriction associated with this realization as

$$\frac{D}{h}<\frac{D-B}{h-A}<C-h,\ h>0. \tag{14}$$

For complex zeros, the separation parameter h must satisfy

$$\frac{A+C}{2}-\sqrt{\left(\frac{C-A}{2}\right)^2-(D-B)} < h < \frac{AD/B}{\frac{A+C}{2}+\sqrt{\left(\frac{C-A}{2}\right)^2-(D-B)}}, \tag{15}$$

where the smaller of the two right-hand terms is to be used.

The derivation of (15) and the details of an analysis of the significance of this restriction are given in Appendix B. Figure 4 shows the region of interest (damped complex zeros and negative real poles) given by the inequalities (6) as values of $A/\sqrt{B}$ and $A/\sqrt{D}$ less than 2 and values of $C/\sqrt{B}$ and $C/\sqrt{D}$ greater than 2. The portion of A, B, C, and D parameter space which is unrestricted by the inequalities (15) lies to the right of the applicable B/D (dc loss) lines. In Fig. 4, the shaded areas represent restricted space for B/D values between unity and 0.9412.

The synthesis procedure under discussion leads directly to the network shown in Fig. 5(a). By a change in the form of the R and the RC impedance paths bridging from input to output terminals, a second network shown in Fig. 5(b) is obtained. The RC inverse networks (3) corresponding to Figs. 5(a) and (b) are shown in Figs. 5(c) and (d), respectively. Figure 6 shows a set of

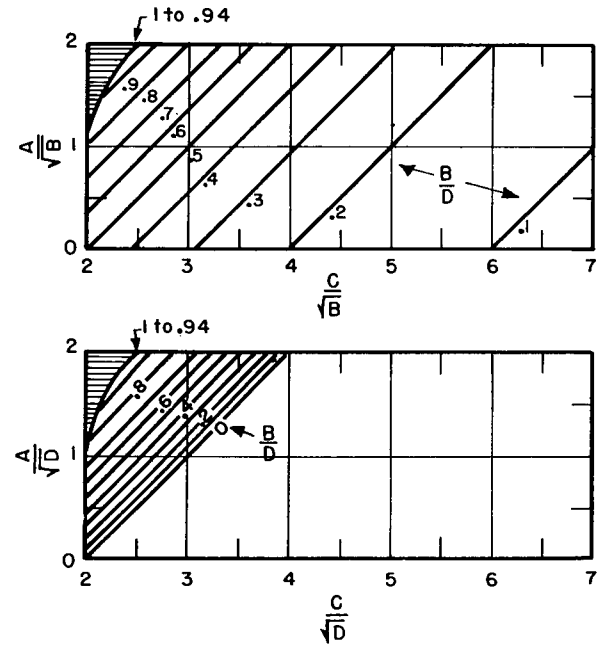

Fig. 4 - For the transfer function $E_2/E_1=(s^2+As+B)/(s^2+Cs+D)$ restricted to complex conjugate zeros and negative real poles, $A/\sqrt{B}$ and $A/\sqrt{D}$ are less than 2 and $C/\sqrt{B}$ and $C/\sqrt{D}$ are greater than 2. By the inequalities $D/h<(D-B)/(h-A)<C-h$, $h>0$, parameter space is additionally restricted to the right of the applicable B/D lines shown above.

networks obtained by forming the corresponding RL inverse network. Any of these eight 7-element networks provide an exact realization of the prescribed transfer function, including the unity multiplicative constant specified by Eq. (5), provided only that a nonzero positive constant h can be found such that the inequalities (15) are satisfied. The element values are specified in Table 2.

LABORATORY MEASUREMENTS

To make an actual physical network, a transfer function was settled upon in the following way (references below are to parameters shown in Eq. (5)): (a) design with a center frequency of 1 radian per second by setting $\sqrt{B}=1$, i.e., $B=1$; (b) for complex zeros ($A<2$), arbitrarily set $A=1$; (c) design for a specified zero-frequency transmission (-6 db) by setting $B/D=1/2$, i.e., $D=2$; (d) design for a maximum loss (-20 db) by making E_2/E_1 at $\omega=1$ equal to 1/10, approximated by setting $C=10$. Using (15), for $A=1$, $B=1$,

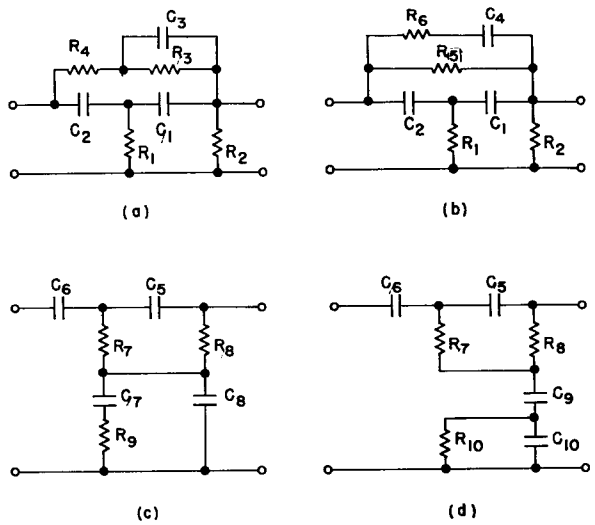

Fig. 5 - Four-network family of 7-element RC networks with each network exhibiting the transfer function $E_2/E_1 = (s^2 + As + B)/(s^2 + Cs + D)$, provided that a separation parameter h exists such that $D/h < (D-B)/(h-A) < C-h$, $h > 0$ (see Table 2 for element values)

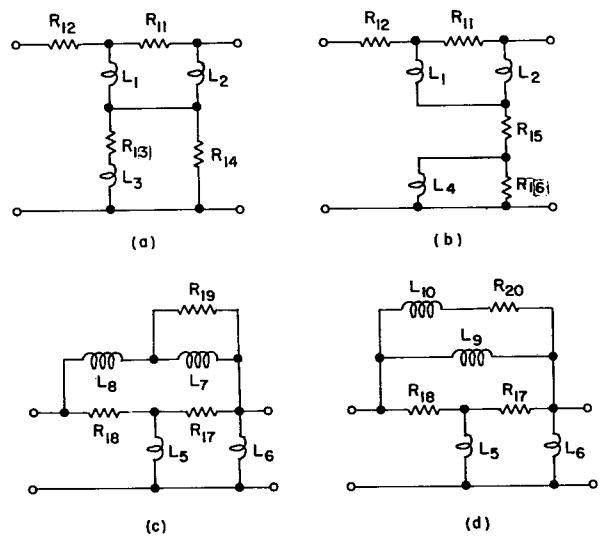

Fig. 6 - Four-network family of 7-element RL networks with each network exhibiting the transfer function $E_2/E_1 = (s^2 + As + B)/(s^2 + Cs + D)$, provided that a separation parameter h exists such that $D/h < (D-B)/(h-A) < C-h$, $h > 0$ (see Table 2 for element values)

$C = 10$, and $D = 2$, we calculate $1.11252 < h < 2$ and arbitrarily select $h = 1.5$. The following values for the components of the network shown in Fig. 5(a) were then calculated: $R_1 = 0.09$, $R_2 = 2$, $R_3 = 1$, $R_4 = 1$, $C_1 = 4.25$, $C_2 = 1.3077$, $C_3 = 1$.

TABLE 2
Formulas for Elements of the Networks Shown in Figs. 5 and 6

Component*	Applicable Magnitude Expression
R_1, C_5, L_5	$\dfrac{(h-A)(C-h)-(D-B)}{(h-A)(C-h)^2}$
R_2, C_6, L_6	$\dfrac{1}{h-A}$
R_3, C_7, L_7	$\dfrac{AD-hB}{AB(h-A)}$
R_4, C_8, L_8	$\dfrac{1}{A}$
R_5, C_9, L_9	$\dfrac{AD-hB}{AB(h-A)}+\dfrac{1}{A}$
R_6, C_{10}, L_{10}	$\dfrac{D-B}{AD-hB}$
$R_{10}, C_4, \dfrac{1}{R_{20}}$	$\dfrac{(h-A)(AD-hB)}{(D-B)^2}$
$C_1, R_7, \dfrac{1}{R_{17}}$	$\dfrac{(C-h)(h-A)}{D-B}$
$C_2, R_8, \dfrac{1}{R_{18}}$	$\dfrac{(h-A)(C-h)}{(h-A)(C-h)-(D-B)}$
$C_3, R_9, \dfrac{1}{R_{19}}$	$\dfrac{A^2(h-A)}{AD-hB}$

*Units are ohms, farads, or henries, as appropriate. The reciprocals $1/R_{17}$, $1/R_{18}$, $1/R_{19}$, and $1/R_{20}$ are shown, rather than the direct expressions, for tabulation simplicity.

Introducing an impedance scaling factor of 10^6, we simply regard the resistance values as in units of megohms and the capacitance values as in units of microfarads. Having taken advantage of the numerical simplicity of design at a center frequency of $\omega = 1$ radian per second, we now scale to a suitable frequency for ease of modeling and measurement. For a center frequency of 1000 cycles per second, we may divide all resistance values by the factor 20 and divide all capacitance values by the factor 314.16. Then the final calculated values for the laboratory setup are: $R_1 = 4.5k$,

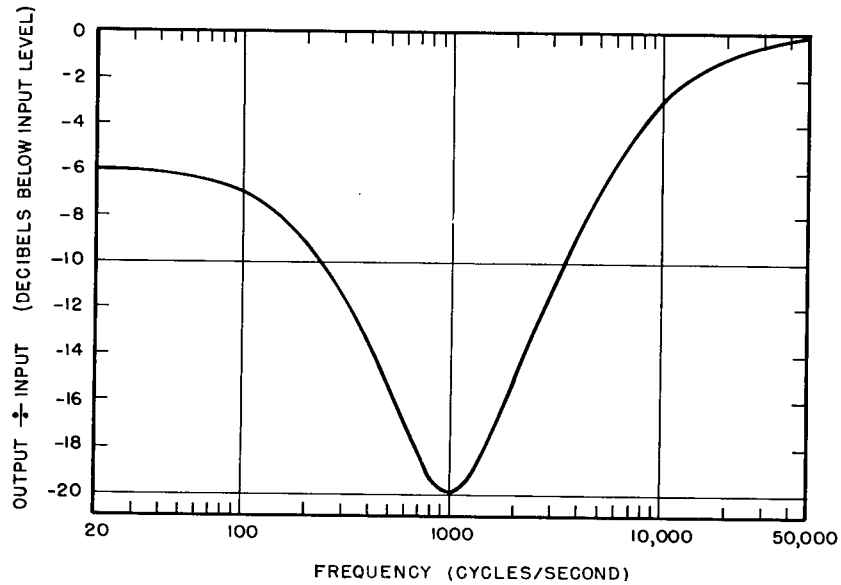

Fig. 7 - Steady-state frequency response measurements made on 7-element network

$R_2 = 100k$, $R_3 = 50k$, $R_4 = 50k$, $C_1 = 0.0135$, $C_2 = 0.00416$, $C_3 = 0.00318$, where k means thousands of ohms and the capacitance values are in microfarads. The steady-state frequency response measurements obtained are satisfactory, as seen in Fig. 7.

Note that a degree of freedom is expended by the arbitrary choice of A. The width of the attenuation notch is strongly influenced by this choice. The spread in the values of the network elements is similarly influenced by the arbitrary choice of h (= 1.5) within the allowable range, in the present instance, of $1.11252 < h < 2$.

NETWORKS REALIZED BY EARLY PROCEDURES

Transfer functions used to illustrate the synthesis procedures of Guillemin and Dasher are found in the literature. For example, the prescribed transfer function

$$\frac{E_2}{E_1} = \frac{s^2 + s + 1}{s^2 + 4s + 3} \tag{16}$$

is used by Van Valkenburg* in illustrating Guillemin's parallel-ladder synthesis procedure. As shown in Fig. 8 the network contains ten elements; the prescribed transfer function is realized only to within a multiplicative constant of 1/15 (requiring a compensating amplifier gain of 23.5 db). Substitution of the parameters of Eq. (16) into (15) yields

$$2 < h < 3. \tag{17}$$

Accordingly, any value of the separation parameter h between 2 and 3 may be used with any of the eight 7-element networks of Figs. 5 and 6 to obtain an exact realization of Van Valkenburg's transfer function. As a second example, the prescribed transfer function

$$\frac{E_2}{E_1} = \frac{s^2 + s + 3}{s^2 + 6s + 8} \tag{18}$$

is used by Truxal (4) in illustrating Dasher's bridged twin-T network synthesis procedure. As shown in Fig. 9, the network contains nine elements; the prescribed transfer function is realized only to within a multiplicative constant of 1/25 (requiring a compensating amplifier gain of 28 db). Substitution of the parameters of Eq. (18) into (15) yields

$$2.382 < h < 2.667. \tag{19}$$

*See p. 328 of reference cited in previous footnote.

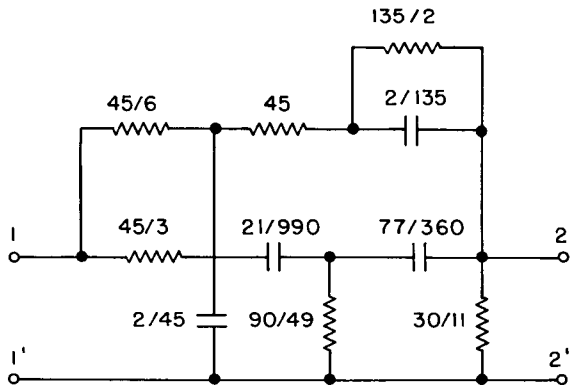

Fig. 8 - Guillemin's parallel-ladder synthesis method as used by Van Valkenburg to obtain the network shown.

Prescribed transfer function

$$\frac{E_2}{E_1}=\left(\frac{s^2+s+1}{s^1+4s+3}\right)$$

Realized transfer function

$$\frac{E_2}{E_1}=\frac{1}{15}\left(\frac{s^2+s+1}{s^2+4s+3}\right).$$

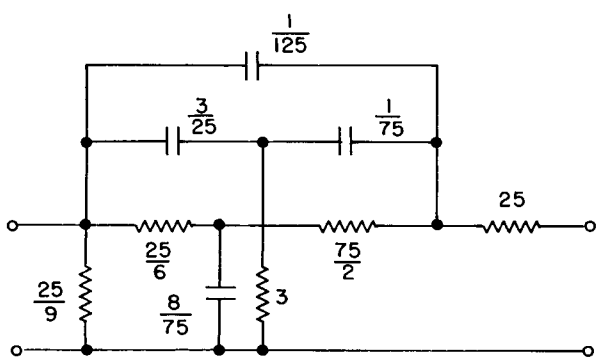

Fig. 9 - Dasher's bridged twin-T synthesis method as used by Truxel to obtain the network shown.

Prescribed transfer function

$$\frac{E_2}{E_1}=\left(\frac{s^2+s+3}{s^2+6s+8}\right)$$

Realized transfer function

$$\frac{E_2}{E_1}=\frac{1}{25}\left(\frac{s^2+s+3}{s^2+6s+8}\right).$$

Accordingly, for values of the separation parameter h given by the inequalities (19), any of the 7-element networks may be employed for an exact realization.

When the prescribed transfer function falls within the requirements specified by (15), the separation parameter h can ordinarily be given any of a range of values, and the 7-element networks represent available physical realizations. For those special cases not included, Guillemin's or Dasher's procedure may be used.

TRANSFER FUNCTIONS WITH UNDAMPED COMPLEX ZEROS AND NEGATIVE-REAL POLES

A resistance-capacitance network realization of a voltage transfer function containing two complex-conjugate zeros on the $j\omega$ axis (zero damping) and two poles on the negative-real axis, expressed by

$$\frac{E_2}{E_1}=\frac{s^2+D}{s^2+Cs+D}, \tag{20}$$

may be approached in the same manner as the case for damped zeros by writing

$$\frac{E_2}{E_1}=\frac{s^2+D}{s(s+C-h)+h\left(s+\frac{D}{h}\right)}, \tag{21}$$

where, again, the separation parameter h is a nonzero positive constant. As before, we now presume a factor $(s+a)$ in order to allow the identifications:

$$\alpha\text{-Network}\begin{cases} -y_{12\alpha}=\dfrac{s^2}{s+a} & (22)\\[2ex] y_{22\alpha}=\dfrac{s(s+C-h)}{s+a} & (23)\end{cases}$$

$$\beta\text{-Network}\begin{cases} -y_{12\beta}=\dfrac{D}{s+a} & (24)\\[2ex] y_{22\beta}=\dfrac{h\left(s+\frac{D}{h}\right)}{s+a}. & (25)\end{cases}$$

The α-network is identical with that obtained before (see Fig. 3(a)). As shown in Fig. 10, the β-network is, in this case, realized with the desired

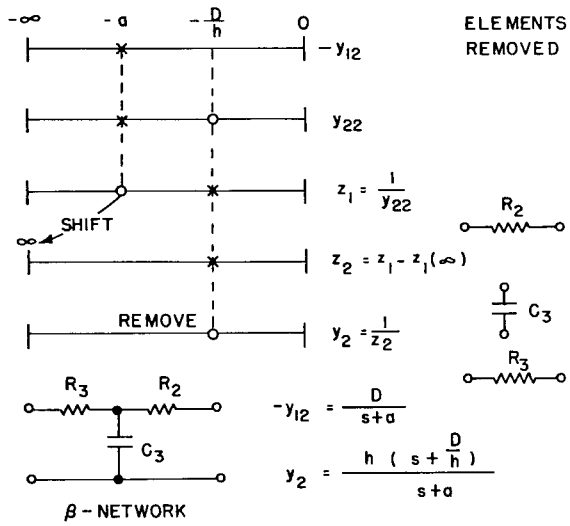

Fig. 10 - The β-network for parallel-T realization

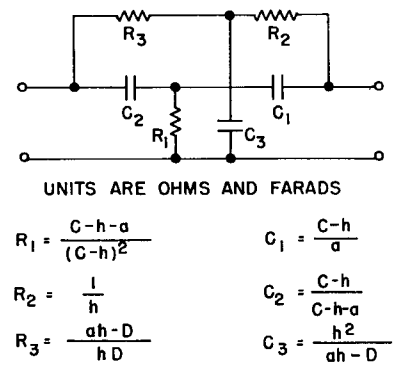

Fig. 11 - Realization of the voltage transfer function $E_2/E_1 = (s^2 + D)/(s^2 + Cs + D)$ for the restrictions $D/h < a < C - h$, $h > 0$, $a > 0$

multiplicative constant (a direct consequence of setting the obtainable objective, i.e., seeking a numerator D rather than the more general B). The complete parallel-T network shown in Fig. 11 provides an exact realization of the prescribed transfer function, including the unity multiplicative constant, given in Eq. (22) provided that the restrictions

$$D/h < a < C - h,\ h > 0,\ a > 0, \tag{26}$$

or, equivalently,

$$D/a < h < C - a,\ h > 0,\ a > 0 \tag{27}$$

can be satisfied in a particular instance.

SYMMETRICAL RC PARALLEL-T NETWORK

The well-known parallel-T network of Augustadt (5) in its symmetrical form and designed for a null (shown in Fig. 12) has the transfer function

$$\frac{E_2}{E_1} = \frac{s^2 + 1}{s^2 + 4s + 1}. \tag{28}$$

For the function given by Eq. (28), the restrictions given by (26) take the form

$$1/h < a < 4 - h. \tag{29}$$

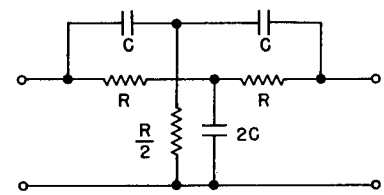

Fig. 12 - Augustadt's parallel-T network in symmetrical form proportioned for a null at $\omega = 1/RC$ with voltage transfer function $E_2/E_1 = (s^2 + 1)/(s^2 + 4s + 1)$

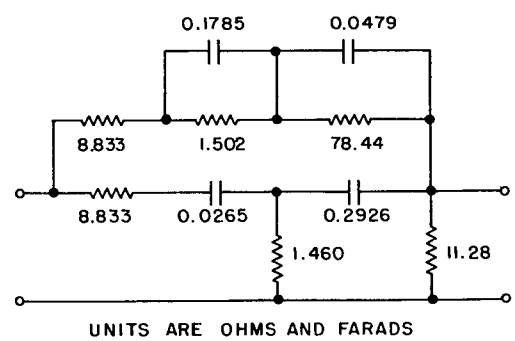

Fig. 13 - The RC parallel-T voltage transfer function $E_2/E_1 = (s^2 + 1)/(s^2 + 4s + 1)$ was prescribed. The network shown was realized using the Guillemin synthesis procedure with the result

$$\frac{E_2}{E_1} = \left(\frac{1}{8.85}\right)\left(\frac{s^2 + 1}{s^2 + 4s + 1}\right)$$

Using the outer pair to define the limits of h,

$$2-\sqrt{3}<h<2+\sqrt{3}. \tag{30}$$

For $h=2$ and $a=1$ we need only an impedance scaling factor of 2 to obtain the identical network of Fig. 12. In striking contrast, the network of Fig. 13 was obtained using the Guillemin parallel-ladder synthesis procedure as guided by (6).

We may observe that the synthesis procedure developments reported here, while lacking complete generality, do lead to efficient networks (in this example, a well-known configuration).

SUMMARY

A procedure for network synthesis from a prescribed transfer function has been presented and applied to complex zero functions to find one-reactance-kind networks exhibiting no flat loss and containing fewer elements than previously known networks.

ACKNOWLEDGMENTS

The writer is pleased to acknowledge the efforts of Mr. S.F. George, Mr. J.P. Barry, and Dr. B. Lepson in studying the boundary-value problem. Technical discussions with Mr. J.P. Dougherty during the development proved most valuable. Miss Betty Weaver, Technical Information Division, prepared the illustrations.

REFERENCES

1. Guillemin, E.A., "Synthesis of RC-Networks," J. Math. and Phys. 28(No. 1):22-42(1949)
2. Dasher, B.J., "Synthesis of RC Transfer Functions as Unbalanced Two Terminal-Pair Networks," Trans. IRE Professional Group on Circuit Theory, PGCT 1:20-34 (Dec. 1952)
3. White, C.F., "Inverse Networks," NRL Report 5420, Nov. 1959
4. Truxal, J.G., "Automatic Feedback Control System Synthesis," New York:McGraw-Hill, p.217, 1955
5. White, C.F., "Transfer Characteristics of a Bridged Parallel-*T* Network," NRL Report R-3167, Aug. 1947
6. VanValkenburg, M.E., "Introduction to Modern Network Synthesis," New York:Wiley, 1960

Appendix A

Ladder Developments of α-Network and β-Network

Consider the following specification functions:

$$\alpha\text{-Network}\begin{cases} -y_{12\alpha}=\dfrac{s^2}{s+p_1} & (8)\\[2ex] y_{22\alpha}=\dfrac{s(s+C-h)}{s+p_1}. & (9)\end{cases}$$

From the pole-zero plot of Fig. A1(a) – identical with Fig. 3(a) – , we see that one of the zeros of y_{22} is located at the desired zero frequency so that removal of the corresponding pole is the first step. Thus,

$$z_0=\frac{1}{y_{22}}=\frac{s+p_1}{s(s+C-h)} \tag{A1}$$

and

$$z_1=z_0-z_0\,(0)=\frac{s+p_1}{s(s+C-h)}-\frac{p_1}{s(C-h)}$$

$$=\frac{C-h-p_1}{(C-h)(s+C-h)}. \tag{A2}$$

One of the required zeros of transmission has been realized. To realize the other zero in $-y_{12}$, we shift the zero at $-(C-h)$ to the origin. Thus,

$$y_1=\frac{1}{z_1}=\frac{(C-h)(s+C-h)}{C-h-p_1} \tag{A3}$$

and

$$y_2=y_1-y_1\,(0)=\frac{(C-h)(s+C-h)}{C-h-p_1}-\frac{(C-h)^2}{C-h-p_1}$$

$$=\frac{(C-h)s}{C-h-p_1}. \tag{A4}$$

The final step is removal of the corresponding pole at the origin. Thus,

$$z_2=\frac{1}{y_2}=\frac{C-h-p_1}{(C-h)s}=\frac{1}{s\left(\dfrac{C-h}{C-h-p_1}\right)}. \tag{A5}$$

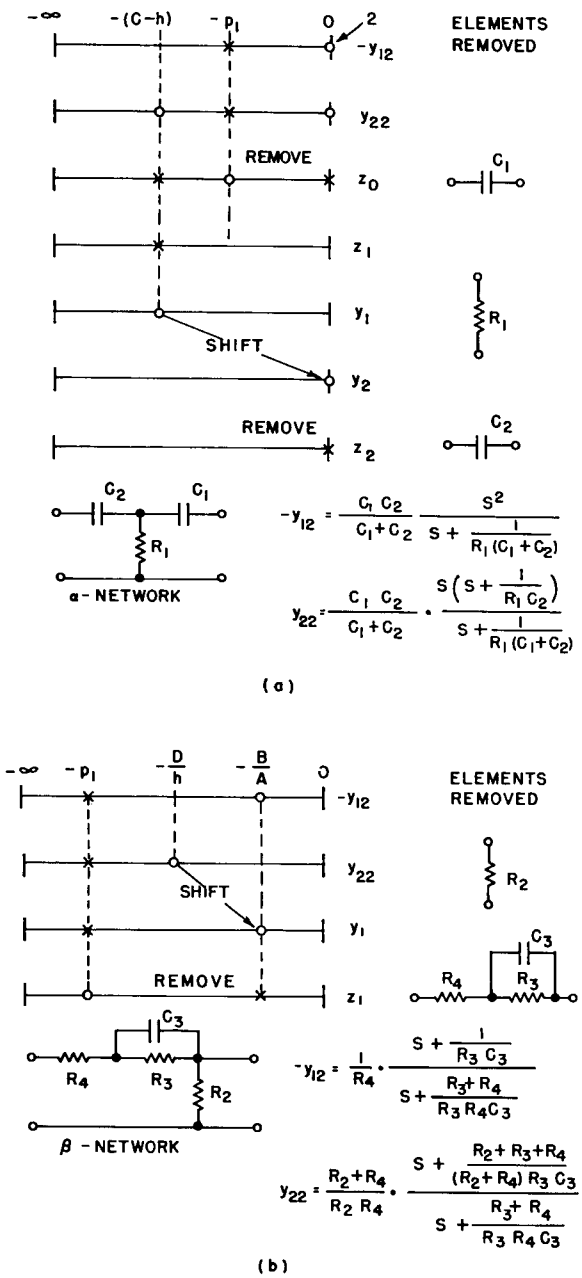

Fig. A1 - (a) The α-network realization and (b) the β-network realization (both networks are the same as in Fig. 3)

Clearly, the quantities removed are represented by a series capacitor C_1, a shunt resistance R_1, and a series capacitor C_2. The realized ratio $-y_{12}/y_{22}$ is in exact agreement with the prescribed transfer function.

Consider the second set of specification functions:

$$\beta\text{-Network}\begin{cases} -y_{12\beta} = \dfrac{A\left(s+\dfrac{B}{A}\right)}{s+p_1} & (10) \\[2ex] y_{22\beta} = \dfrac{h\left(s+\dfrac{D}{h}\right)}{s+p_1}. & (11) \end{cases}$$

From the pole-zero plot of Fig. A1(b) – identical with Fig. 3(b) – , we see that the required zero of transmission at $s = -B/A$ can be obtained by shifting the y_{22} zero at $s = -D/h$. The corresponding pole is then removed. The last term in z_1 is identified as a series resistor R_4. Thus,

$$y_1 = y_{22} - y_{22}\,(-B/A) \tag{A6}$$

$$= \frac{h\left(s+\dfrac{D}{h}\right)}{s+p_1} - \frac{h\left(\dfrac{D}{h}-\dfrac{B}{A}\right)}{p_1-\dfrac{B}{A}}$$

$$= \left(\frac{hp_1-D}{p_1-\dfrac{B}{A}}\right)\left(\frac{s+\dfrac{B}{A}}{s+p_1}\right) \tag{A7}$$

and

$$z_1 = \frac{1}{y_1} = \left(\frac{p_1-\dfrac{B}{A}}{hp_1-D}\right)\left(\frac{s+p_1}{s+\dfrac{B}{A}}\right) \tag{A8}$$

$$= \frac{\dfrac{\left(p_1-\dfrac{B}{A}\right)^2}{hp_1-D}}{s+\dfrac{B}{A}} + \frac{p_1-\dfrac{B}{A}}{hp_1-D}. \tag{A9}$$

Clearly, the quantities removed are represented by a shunt resistance R_2 and a parallel combination of a resistance R_3 and a capacitance C_3 connected in series with a resistance R_4. The realized ratio $-y_{12}/y_{22}$ is equal to

$$\frac{-y_{12\beta}}{y_{22\beta}} = \left(\frac{R_2}{R_2 + R_4}\right)\left(\frac{s + \frac{1}{R_3 C_3}}{s + \frac{R_2 + R_3 + R_4}{R_3 R_4 C_3}}\right) \quad \text{(A10)}$$

$$= \left(\frac{p_1 - \frac{D}{h}}{p_1 - \frac{B}{A}}\right)\left(\frac{s + \frac{B}{A}}{s + \frac{D}{h}}\right) \quad \text{(A11)}$$

The prescribed function is obtained only for

$$\frac{A}{h} = \frac{p_1 - \frac{D}{h}}{p_1 - \frac{B}{A}}. \quad \text{(A12)}$$

Solving, we find

$$p_1 = \frac{D - B}{h - A}. \quad \text{(A13)}$$

Appendix B

S. F. George
Consultant, Radar Division

White Network Boundary-Value Problem

We are given the transfer function

$$\frac{E_2}{E_1} = \frac{s^2 + As + B}{s^2 + Cs + D}, \; 0 < A, B, C, D, \quad \text{(B1)}$$

with a general restricted domain specified by

$$A^2 < 4B < 4D < C^2. \quad \text{(B2)}$$

The added restriction given by White is

$$\frac{D}{h} < \frac{D - B}{h - A} < C - h, \; h > 0. \quad \text{(B3)}$$

From the general restriction (B2) we have

$$A < 2\sqrt{B}, \; A < C, \; B < D, \; A < h. \quad \text{(B4)}$$

From the White restriction (B3) we have:

1. Using the left-hand pair of inequalities,

$$\frac{D}{h} < \frac{D - B}{h - A}, \quad \text{(B5)}$$

or

$$D(h - A) < h(D - B)$$

Therefore,

$$A > hB/D \text{ or } h < AD/B. \quad \text{(B6)}$$

2. Using the outer pair of inequalities,

$$D/h < C - h, \quad \text{(B7)}$$

or

$$D < h(C - h),$$

which becomes

$$h^2 - hC + D < 0.$$

Therefore, one solution is

$$h < \frac{C}{2} + \sqrt{\left(\frac{C}{2}\right)^2 - D}. \quad \text{(B8)}$$

Then, from (B6), (B4), and (B8) we have

$$hB/D < A < h < \left(\frac{C}{2}\right) + \sqrt{\left(\frac{C}{2}\right)^2 - D} \quad \text{(B9)}$$

Selecting from (B9) the particular inequality

$$A < \left(\frac{C}{2}\right) + \sqrt{\left(\frac{C}{2}\right)^2 - D} \quad \text{(B10)}$$

and looking first at values of $A > C/2$, we have

$$\left(A - \frac{C}{2}\right) < \sqrt{\left(\frac{C}{2}\right)^2 - D}$$

$$\left(A - \frac{C}{2}\right)^2 < \left(\frac{C}{2}\right)^2 - D$$

$$A^2 - AC < -D$$

or

$$D < AC - A^2 . \qquad \text{(B11)}$$

But, from the general restriction, D is greater than B. Therefore,

$$B < D < AC^2 - A^2, \qquad \text{(B12)}$$

or

$$AC - A^2 > B.$$

Therefore,

$$C > A + \frac{B}{A}. \qquad \text{(B13)}$$

Dividing both sides of (B13) by $\sqrt{B}$, we have

$$C/\sqrt{B} > A/\sqrt{B} + \sqrt{B}/A. \qquad \text{(B14)}$$

This is the added restriction of White for $A > C/2$ or $A/\sqrt{B} > C/(2\sqrt{B})$.

Now let us look at (B10) for $A < C/2$. Since from (B10)

$$A < \frac{C}{2} + p,$$

where p is positive, then (B10) must always be satisfied for $A < C/2$. Hence there is no added White restriction. Figure B1 shows the plot of (B14) and the added White restriction (cross hatched).

From (B12) we also have the inequality given by

$$AC - A^2 > D,$$

or

$$C/\sqrt{D} > A/\sqrt{D} + \sqrt{D}/A. \qquad \text{(B15)}$$

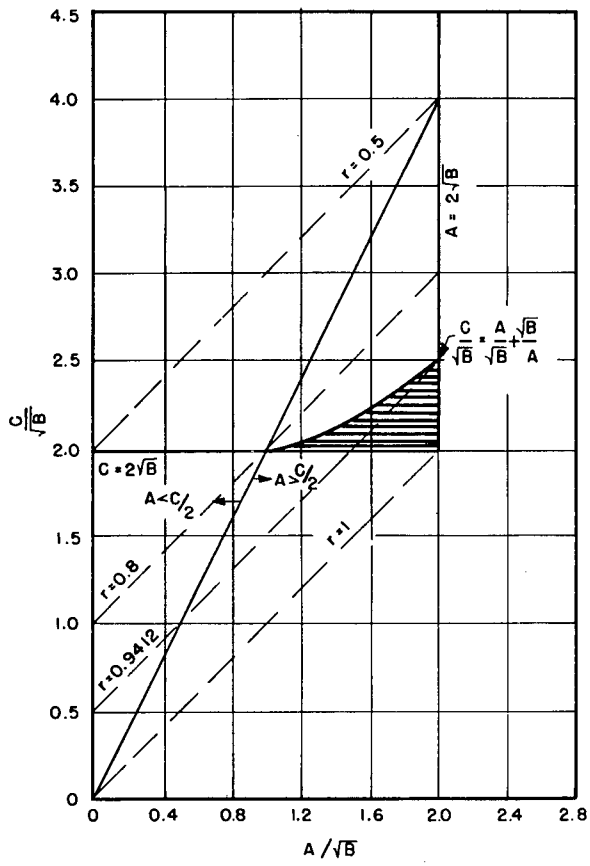

Fig. B1 - Restrictions with respect to A, B, and C in relation to $r = B/D$

From the general restrictions, (B2), we have

$$A < 2\sqrt{D} \text{ and } C > 2\sqrt{D}. \qquad \text{(B16)}$$

Thus, Fig. B2 can be drawn to look the same as Fig. B1, except that D replaces B.

We have used (B5) and (B7) and two parts of (B3) to obtain the results above. Now we must see what, if any, further restrictions are imposed by using the right-hand pair of inequalities

$$D - B < (h - A)\ (C - h). \qquad \text{(B17)}$$

Expanding (B17) we obtain

$$D - B < hC - AC - h^2 + Ah,$$

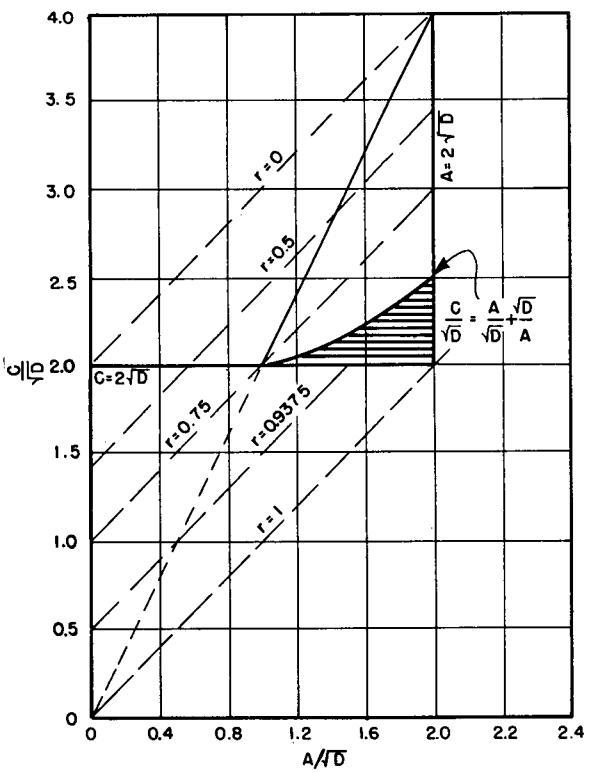

Fig. B2 - Restrictions with respect to A, C, and D in relation to $r = B/D$

or

$$h^2 - h\,(A + C) + (D - B + AC) < 0. \qquad \text{(B18)}$$

Solving (B18) for h we have

$$h > \frac{A}{2} + \frac{C}{2} - \sqrt{\left(\frac{A-C}{2}\right)^2 - (D - B)} \qquad \text{(B19)}$$

and

$$h < \frac{A}{2} + \frac{C}{2} + \sqrt{\left(\frac{A-C}{2}\right)^2 - (D - B)}. \qquad \text{(B20)}$$

Now, from (B9) and (B20) we have

$$\frac{hB}{D} < A < h < \frac{A}{2} + \frac{C}{2} + \sqrt{\left(\frac{A-C}{2}\right)^2 - (D-B)}. \qquad \text{(B21)}$$

From (B6) and (B20) the upper bound on h may be determined, using whichever expression yields the smaller value. Now from (B21) let us examine

$$A < \frac{A}{2} + \frac{C}{2} + \sqrt{\left(\frac{A-C}{2}\right)^2 - (D - B)},$$

or

$$\frac{A}{2} < \frac{C}{2} + \sqrt{\left(\frac{A-C}{2}\right)^2 - (D - B)}. \qquad \text{(B22)}$$

Since $A < C$ always, the inequality of (B22) is always satisfied provided the radical is real. For this to be true, we must have

$$D - B < \left(\frac{A-C}{2}\right)^2, \qquad \text{(B23)}$$

or dividing by D,

$$1 - \frac{B}{D} < \frac{1}{4}\left(\frac{A}{\sqrt{D}} - \frac{C}{\sqrt{D}}\right)^2 \qquad \text{(B24)}$$

Let

$$r = B/D,\ 0 < r < 1. \qquad \text{(B25)}$$

Then, we may have either

$$A/\sqrt{D} - C/\sqrt{D} > 2\sqrt{1-r} \qquad \text{(B26)}$$

or

$$C/\sqrt{D} - A/\sqrt{D} > 2\sqrt{1-r}. \qquad \text{(B27)}$$

Since $C > A$, the last expression, (B27), must hold. Therefore,

$$\frac{C}{\sqrt{D}} > \frac{A}{\sqrt{D}} + 2\sqrt{1-r}. \qquad \text{(B28)}$$

This is a family of lines on Fig. B2 with slope +1 and ordinate intercept $2\sqrt{1-r}$. Table B1 shows some values of the intercept $C/\sqrt{D}$ as a function of r.

TABLE B1

Values of $C/\sqrt{D}$ as calculated from (B28)

Value of r	$C/\sqrt{D}$ intercept
0	2
0.5	1.4
1	0
0.75	1
0.9375	0.5

We could have divided (B23) by B to obtain

$$\frac{D}{B} - 1 < \frac{1}{4}\left(\frac{C}{\sqrt{B}} - \frac{A}{\sqrt{B}}\right)^2. \tag{B29}$$

or for $r = B/D$, where $0 < r < 1$,

$$C/\sqrt{B} - A/\sqrt{B} > 2\sqrt{(1/r - 1)}$$

or

$$\frac{C}{\sqrt{B}} > \frac{A}{\sqrt{B}} + 2\sqrt{\frac{1}{r} - 1}. \tag{B30}$$

This is a family of lines on Fig. B1 with slope +1 and ordinate intercept $2\sqrt{(1/r) - 1}$. Table B2 shows some values of the intercept $C/\sqrt{B}$ as a function of r.

TABLE B2

Values of $C/\sqrt{B}$ as calculated from (B30)

Value of r	$C/\sqrt{B}$ intercept
1	0
0.9412	0.5
0.8	1.0
0.5	2.0
0	∞

For a more complete graphical portrayal, Tables B3 and B4 have been calculated.

TABLE B3

Table of Values of $y = x + \frac{1}{x}$ for

$$y = \frac{C}{\sqrt{D}} \text{ or } \frac{C}{\sqrt{B}} \text{ and } x = \frac{A}{\sqrt{D}} \text{ or } \frac{A}{\sqrt{B}}$$

y	x
2	1
2.01	1.1
2.03	1.2
2.07	1.3
2.11	1.4
2.17	1.5
2.225	1.6
2.29	1.7
2.36	1.8
2.43	1.9
2.5	2.0

TABLE B4

Values of Intercept x_B or x_D for White Restriction Lines:

$$\frac{C}{\sqrt{B}} = \frac{A}{\sqrt{B}} + 2\sqrt{\frac{1}{r} - 1} = \frac{A}{\sqrt{B}} + x_B$$

$$\frac{C}{\sqrt{D}} = \frac{A}{\sqrt{D}} + 2\sqrt{1 - r} = \frac{A}{\sqrt{D}} + x_D$$

r	x_B	x_D
1	0	0
0.9	0.667	0.632
0.8	1.00	0.894
0.7	1.31	1.10
0.6	1.63	1.26
0.5	2.00	1.41
0.4	2.45	1.55
0.3	3.06	1.67
0.2	4.00	1.79
0.1	6.00	1.90
0	∞	2