5308
Williams

-per ltr. from 1240-513:GLB:lm dtd. 21 Dec. 78

UNCLASSIFIED

CONFIDENTIAL

UNCLASSIFIED

UNCLASSIFIED

NRL Report 5539

Cy 26

THE NL/ALQ-F (XB-1) JAMMER

[UNCLASSIFIED TITLE]

J. R. Williams

Countermeasures Branch
Radio Division

APPROVED FOR PUBLIC RELEASE
DISTRIBUTION UNLIMITED

October 4, 1960

Further distribution of this report, or of an abstract, or reproduction thereof may be made only with the approval of the Director, U.S. Naval Research Laboratory, Washington 25, D.C., or of the activity sponsoring the research reported therein, as appropriate.

PLEASE RETURN THIS COPY TO:

NAVAL RESEARCH LABORATORY
WASHINGTON, D.C. 20375
ATTN: CODE 2628

Because of our limited supply you are requested to return this copy as soon as it has served your purposes so that it may be made available to others for reference use. Your cooperation will be appreciated.

NDW-NRL-5070/2035 (Rev. 3-73)

U. S. NAVAL RESEARCH LABORATORY
Washington, D.C.

CONFIDENTIAL

UNCLASSIFIED

UNCLASSIFIED

DOWNGRADING AT 12-YEAR INTERVALS

NOT AUTOMATICALLY DECLASSIFIED

DOD DIR 5200.10

UNCLASSIFIED

SECURITY

This document contains information affecting the national defense of the United States within the meaning of the Espionage Laws, Title 18, U.S.C., Sections 793 and 794. The transmission or the revelation of its contents in any manner to an unauthorized person is prohibited by law.

UNCLASSIFIED

CONTENTS

Abstract	ii
Problem Status	ii
Authorization	ii
INTRODUCTION	1
CARCINOTRON JAMMER FUNCTION	2
THE CARCINOTRON JAMMER SYSTEM	2
THE TRANSMITTER UNIT	4
THE CM 710 TYPE M CARCINOTRON	4
CARCINOTRON OUTPUT COUPLING	8
THE MODULATOR UNITS	11
POWER-SUPPLY UNITS	13
REGULATOR UNIT	17
COOLING UNIT	19
CONTROL UNIT	19
RECEIVER UNIT	22
LOW-FREQUENCY MODULATOR	22
SUMMARY	23

UNCLASSIFIED

ABSTRACT
[Confidential]

The NL/ALQ-F (XB-1) Jammer was designed as an experimental airborne jammer to take advantage of the electronic capabilities of the CM 710 carcinotron and to provide advantages heretofore unavailable with older tubes. Of particular interest is its use as a wide-band barrage jammer operating in conjunction with a panoramic receiver, displaying at once a frequency presentation corresponding to the full transmitter tuning range. The relatively broad-band nature of the barrage signal does not require precise set-on.

The system weighs about 350 pounds and occupies about seven cubic feet of cabinet space. It is considered that with advanced techniques a jammer using the carcinotron could be designed which would be considerably more compatible with aircraft requirements.

As a tube type, the carcinotron does not appear to compete with the magnetron from the physical standpoint. The magnetron, however, lacking flexibility, may never be as suitable for use against newer radar types with advanced antijam techniques, nor does the magnetron offer the capacity for jamming operations against multiple radar installations.

PROBLEM STATUS

This is a final report on one phase of this problem; work on other phases is continuing.

AUTHORIZATION

NRL Problem R06-12
Project NA 442-002
BuAer No. AV-42000 and AS-303

Manuscript submitted July 1, 1960.

UNCLASSIFIED

UNCLASSIFIED

THE NL/ALQ-F (XB-1) JAMMER
[Unclassified Title]

INTRODUCTION

Four fundamental problems must be solved in the development of adequate jamming equipment.

- Generation of rf power
- Modulation of the power source
- Frequency set-on
- Radiation.

Power generation, modulation and, to a large extent, frequency set-on are dependent on the tubes available, and, although radiation is not directly a tube problem, methods of coupling tubes to antennas may have marked effects on the operation of some tube types such as magnetrons and klystrons. Until recently, tubes have been limited to conventional types at frequencies up to the L-band region and to magnetrons and klystrons at microwave frequencies, with the magnetron being the foremost power source for jamming and for search and fire-control radars. For high-average-power jammers, the magnetron has shown reasonably adequate capabilities. Its size and weight, though not ideal, are considered acceptable. The less favorable characteristics of this device are (a) its requirement for cumbersome mechanical tuning, and (b) its sensitivity to variations in rf loading, which leads to discontinuities in tuning and to unpredictable combinations of amplitude modulation (AM) and frequency modulation (FM).

True low-level electronically tuned magnetrons are now becoming available, and hydraulic mechanical tuning of high-power tubes offers considerable promise for faster set-on. While such considerations may continue to uphold the prominent position of the magnetron in the noise-jammer field, more recent developments lead to serious consideration of other devices having more controllable modulation facilities, along with electronic-tuning capabilities. Of these, the backward-wave oscillators hold considerable promise.

Early efforts in the traveling-wave-tube field led to the development of two basic slow-wave oscillators, namely the O-type BWO, in which the electron stream is focused down the length of the delay structure by means of a magnetic field along the beam axis, and the M-type, in which the electric and magnetic fields in the reaction region are crossed and controlled in magnitude so as to oppose beam deviation from its required traverse along the delay structure. The O-type tube frequently utilizes the helix as a delay line and thus is representative of the more conventional TWT devices developed in this country. Although some experimental work was done in this country on crossed-field tubes, the CSF Co. of Paris concentrated considerable effort in this direction and was the first to develop an oscillator capable of both electronic tuning and high output power. Tubes were supplied by the Raytheon Co. in the United States for application to American production methods. Additional tubes were supplied to military activities in the U.S. The

UNCLASSIFIED

U.S. Naval Research Laboratory received several samples of a tube called the CM 710, which operated in S band. Preliminary tests indicated its adaptability to airborne-jammer applications, and an experimental airborne transmitter, the NL/ALQ-F (XB-1) was built at NRL.

CARCINOTRON JAMMER FUNCTION

The NL/ALQ-F (XB-1) jammer is an experimental equipment designed for operational evaluation of the CM 710 carcinotron. The equipment represents an advance over older jammers because it provides fast electronic tuning and a very flexible modulation capability. Its FM capabilities provide for a barrage-type noise signal covering about 100 Mc. Where several signals are grouped close together in frequency, as may be the case in a heavily defended area, they may all be jammed simultaneously. Again, where it is desirable to concentrate the full jammer power against one radar (spot jamming), relatively pure AM noise is available. In comparing the use of the two modulation types, barrage jamming provides for wide-band coverage with generally reduced effective power, because the power per megacycle is less, while spot jamming provides maximum effectiveness against perhaps not more than one radar.

To reduce the danger from guidance systems that can use the interfering signal for beam riding, provision is made for jammer modulation at or close to the angular nutation rate of the radar's conical-scan frequency. This low-frequency modulating signal can be used for either AM or FM and is intended to falsify the target angular position. Although this modulation type can be used independently of the normal video modulation, it is intended that it normally be superimposed on the noise-modulated signal, so that both range and angular data may be simultaneously denied the radar.

In the past, receivers such as the AN/APR-9 have been used to determine the frequency of the signal to be jammed. Since such receivers display only a small frequency spectrum, 20 Mc for the APR-9, time is lost in the process of searching for the signal frequency. The receiving equipment used in the ALQ-F functions as a wide-band panoramic analyzer, displaying simultaneously all of the signals within the tuning range of the jammer as well as the jammer's signal. Hence only jammer tuning is necessary.

Automatic jammer set-on is not provided, but once acquired, the signal-frequency information can be stored and other signals acquired. Four storage channels are provided, such that once acquired four signals can thereafter be engaged automatically in sequence, or as required. The near-instantaneous tuning provides the necessary rapid switching from one to the other without loss of tuning time. In addition, the jammer may be automatically swept in frequency to cover a segment of the tuning range. Sweep jamming provides an operation similar in effect to sequential jamming, but it requires no tuning operation other than the original selection of sector limit and sweep speed. Where unattended operation is required, sweep jamming provides for even greater spectrum coverage than wide-band FM modulation alone. However, it may result in relatively long periods during which no jamming occurs.

THE CARCINOTRON JAMMER SYSTEM

Figures 1 and 2 show the essential arrangement of the system. The cooling unit is a heat exchanger which circulates cooling liquid through the carcinotron. The regulator unit, in series with the high voltage supplied to the anode, is provided with the necessary front-panel control of the carcinotron anode voltage, which in turn controls the jammer.

UNCLASSIFIED

UNCLASSIFIED

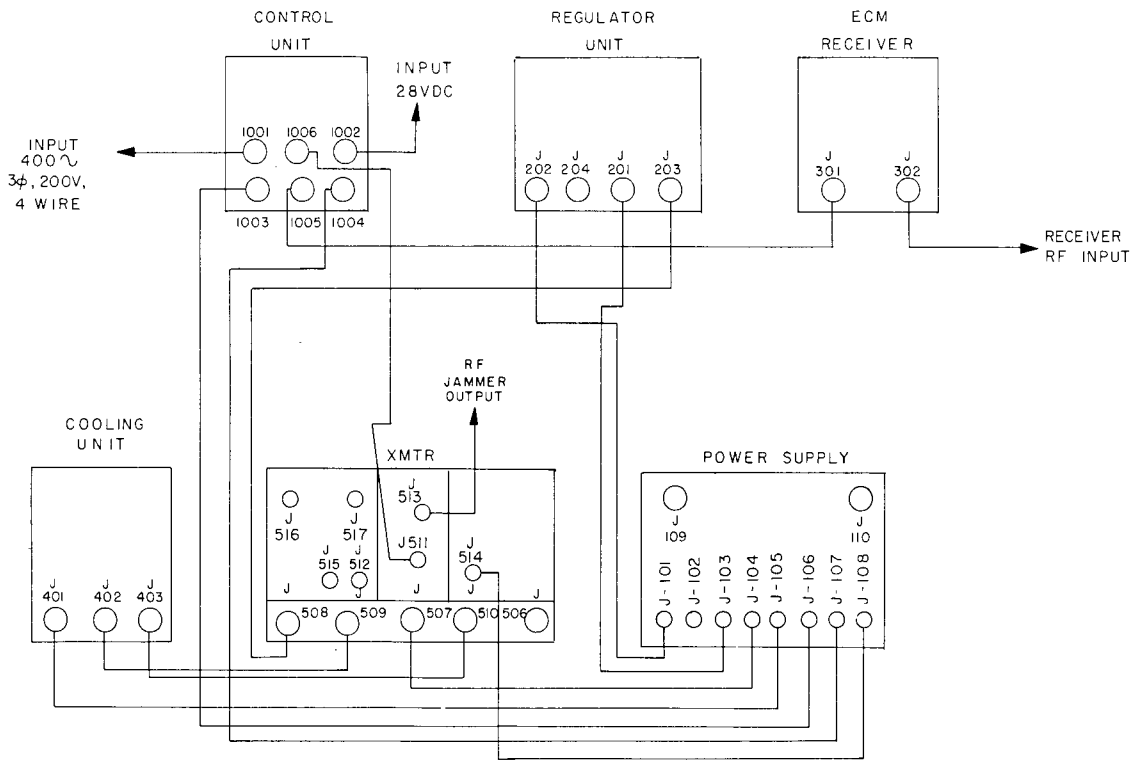

Fig. 1 – Block diagram of the NL/ALQ-F (XB-1) system

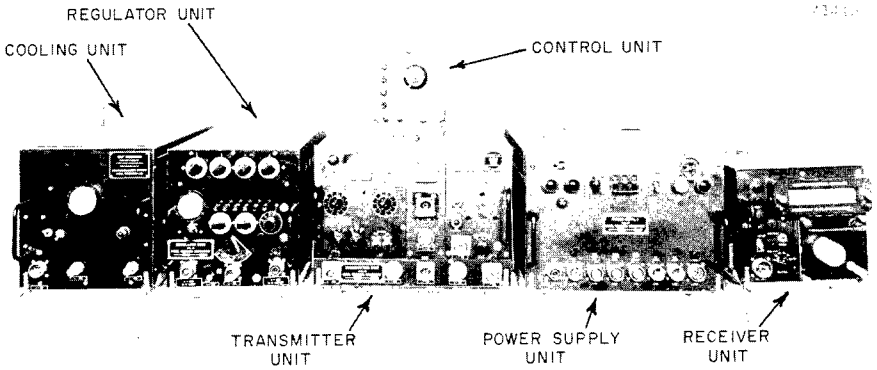

Fig. 2 – The NL/ALQ-F (XB-1) system

frequency. The additional controls governing the selection of fixed-frequency, sequential, or sweep jamming are also functions of this unit. The transmitter unit houses the modulator, the sole supply regulator, the heater supply, and the carcinotron. The small control unit is used to control the transmitter at a remote operating point. The power-supply unit contains all the power sources and regulators. The four main transmitter units are housed in standard aircraft racks and weigh approximately 300 lb, including cabling. The receiving unit is also housed in one aircraft rack and weighs about 40 lb.

THE TRANSMITTER UNIT

The transmitter unit, Figs. 3 and 4, is the heart of the system and houses primarily the carcinotron and its modulator. Space considerations required that certain power-supply parts be located in the transmitter unit, but these parts are described elsewhere in this report. The primary components of interest in the transmitter are:

- The carcinotron oscillator
- The rf output arrangement for high-voltage isolation
- The modulator.

THE CM 710 TYPE M CARCINOTRON

Though similar in some ways to magnetrons, the S-band CM 710 carcinotron received from CSF Co. in France differs radically, in that it provides for independent and almost pure AM or FM or any desired combination of both and is capable of being tuned electronically over its entire frequency range by varying the voltage on one element only, the anode.

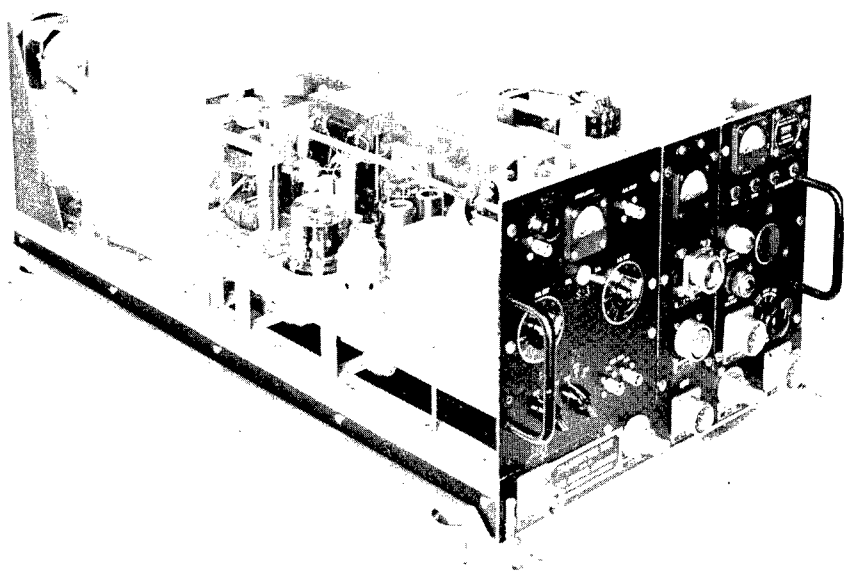

Fig. 3 – Left side of the NL/ALQ-F (XB-1) transmitter unit

UNCLASSIFIED

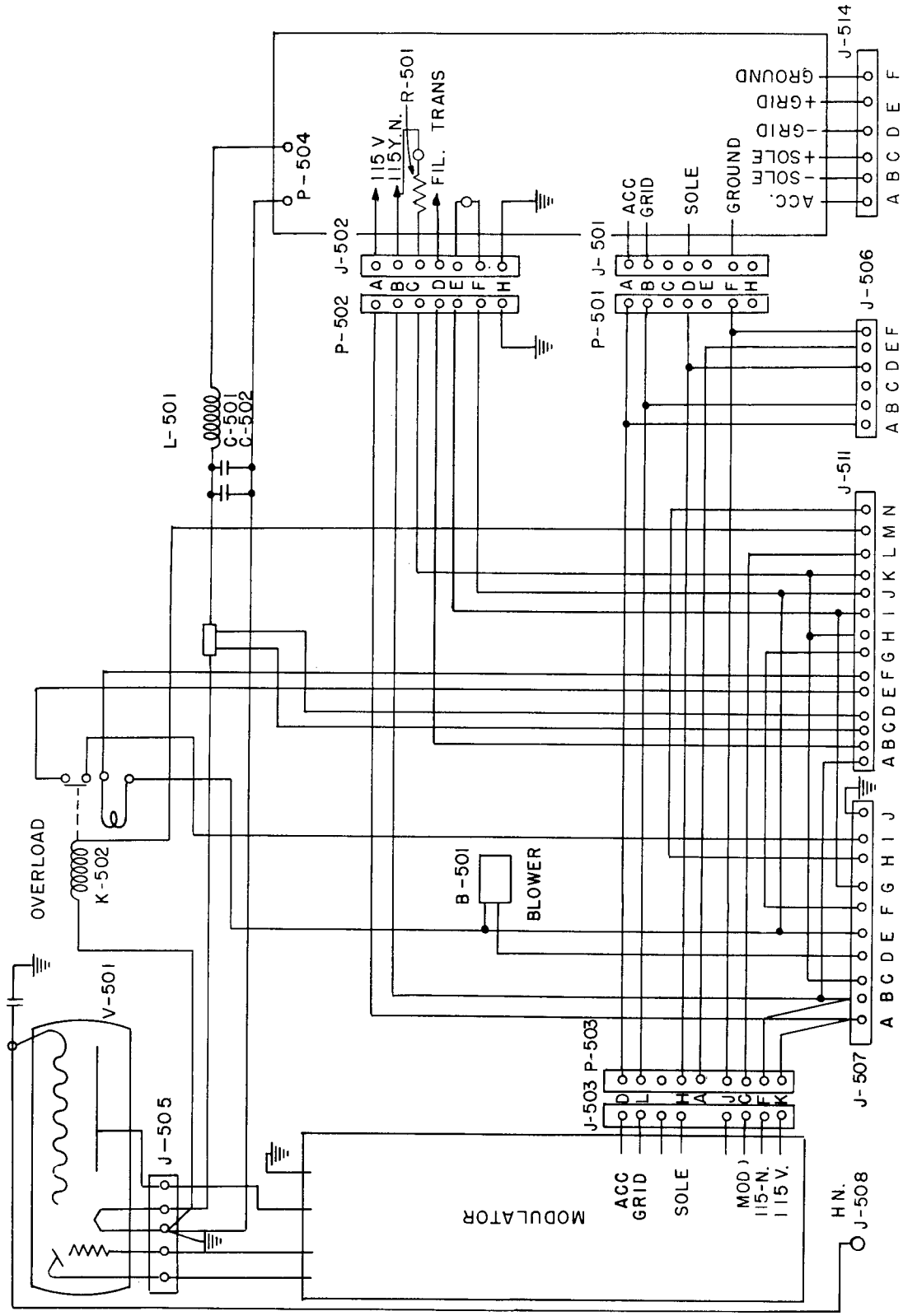

Fig. 4 – Block diagram of the transmitter unit

Except with respect to conventional coupling considerations, the tube is essentially independent of rf loading; i.e., the tube is not afflicted with long-line instabilities derived from the pulling effects observed in magnetron devices. Conversely, at its present stage of development, it does not appear to hold the promise of the high efficiency of magnetrons; hence for the same output the power-supply requirements are more severe. Additional tube elements tend to complicate the power-supply problem, and the very fact that the tube is electronically tunable leads to the requirements for precise voltage regulation. With respect to size and weight, present carcinotron types, when packaged complete with permanent magnet, compare unfavorably with magnetrons, but with advanced techniques they may improve in this respect.

The CM 710 carcinotron and the associated permanent magnet are shown in Fig. 5, while Fig. 6 shows the packaged tube. It will be noted that the tube can easily be removed from the permanent magnet for replacement purposes. The tube requires a dc heater supply, a negative grid supply, an accelerating-anode (accelerator) supply, a variable high-voltage supply for the delay line and collector, which are common and will be referred to as the anode, and finally a negative supply for the sole element. The characteristics of the tube for application in the NRL equipment are as follows:

Anode voltage range	+3000 to +4900 v
Frequency range	2500 to 3100 Mc
Anode current	200 ma
Heater voltage	3.0 v dc
Heater current	18 amp
Grid voltage	-300 v
Grid current	Negligible
Accelerator voltage	+900 v
Accelerator current	Negligible
Sole voltage	-750 v
Sole current	-20 ma
Power output	150 watts

Figure 7 shows the variation of delay-line voltage versus frequency.

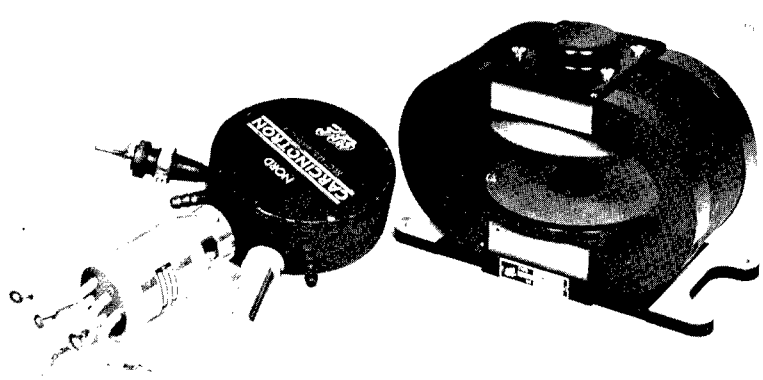

Fig. 5 – The CM 710 carcinotron and associated permanent magnet

UNCLASSIFIED

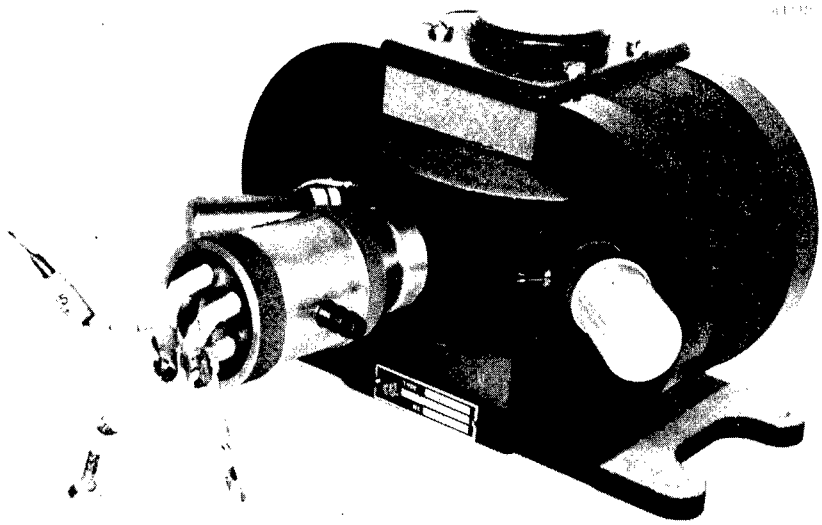

Fig. 6 – Packaged CM 710 carcinotron

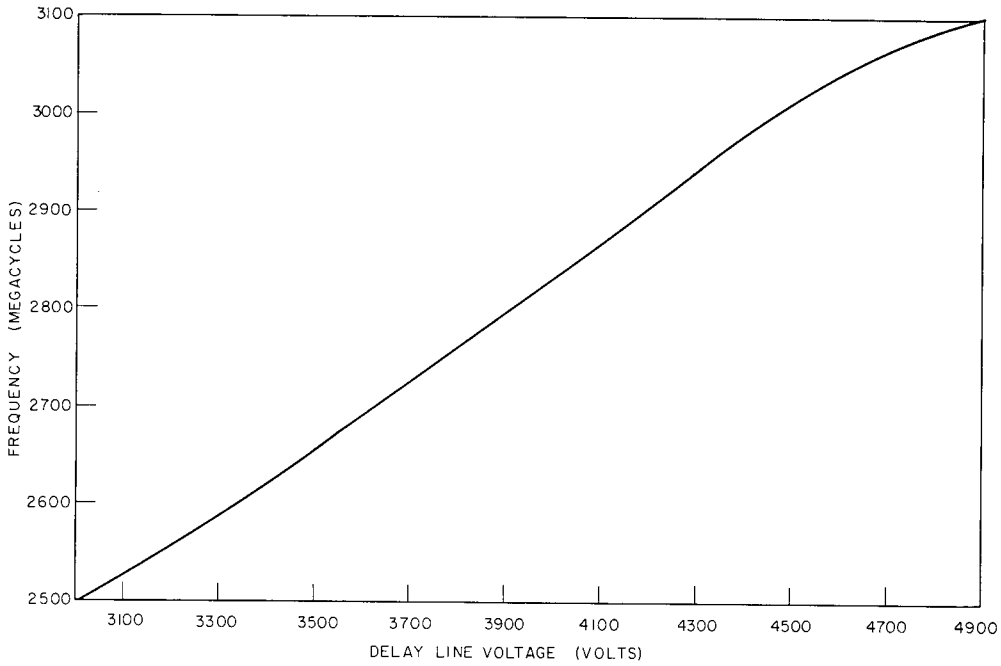

Fig. 7 – Delay-line voltage versus frequency for CM 710 carcinotron

The values given previously are subject to some variation between tubes, and for other applications more output power can be obtained with greater anode current, which in turn will require different grid or accelerator voltages. The characteristics here given are those which for this development provided output power consistent with reasonable power-supply weight and space.

CARCINOTRON OUTPUT COUPLING

The method adopted for applying voltages to the carcinotron required that special treatment be given to the rf power-output coupling. In this system, the cathode is used as zero reference and is grounded. The anode, which is operated between 3000 and 5000 volts above the grounded cathode, is directly connected to the rf output by a transition to a concentric transmission line. Since the power-output coupler is operated at the anode potential with respect to chassis ground, a high-voltage transmission-line isolator is required to confine the anode voltage to the neighborhood of the carcinotron.

The transmission-line system contained within the transmitter unit is shown in Fig. 8. The first unit in the system is a tapered transmission line used to transform both mechanically and electrically from the carcinotron output to RG-44/u transmission line. The CM 710 has a 70-ohm output impedance which is transformed to 50 ohms. The input coupler has metric threads to match those on the outer conductor of the tube output. The center conductor is provided with long, resilient spring fingers designed to make good electrical contact and at the same time place a minimum of strain on the glass tube seal. Two polyfoam beads are used to position the center conductor at installation, and a fixed-bead coaxial-line adaptor is used to support the center conductor at the output end.

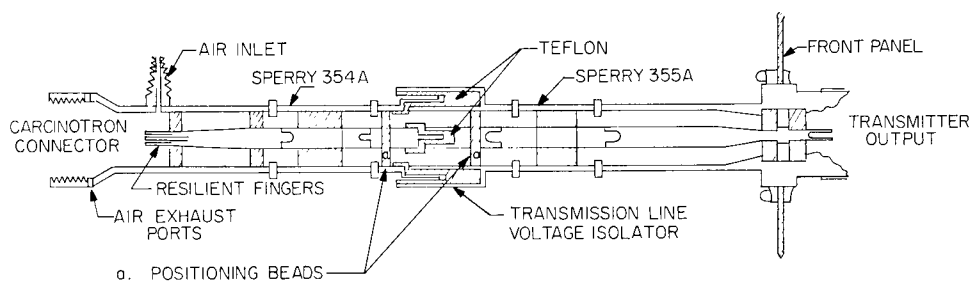

Fig. 8 – Transmission-line assembly

Cooling of the output seal is provided by low-pressure air. An air stream is directed at the center-conductor finger contacts, thus removing heat conducted from the seal by the center conductor. This air, being prevented from travelling down the line by the support beads, is directed over the seal and exhausted through holes symmetrically spaced around the outer conductor.

The high-voltage line isolator follows the first coaxial-line adaptor. Both the inner and outer conductors are broken by choke sections, of somewhat different design. The inner conductor uses an open-ended quarter-wave choke to provide a short circuit to the rf energy at its input. The open circuit is formed by a cavity within the center conductor extending beyond the termination of the choke section. The choke section is filled with a continuous piece of Teflon to provide the voltage isolation. The Teflon extends out through

UNCLASSIFIED

the gap in the conductor and then along the transmission line for a distance of one-half inch to generate a long air path between sections of the center conductor. The closest spacing between conductors is 40 mils of Teflon within the choke itself.

The outer conductor uses an open-ended half-wave line terminated in a short circuit reflected from a second half-wave line terminated in a physical short circuit. Use of the double-section line provides improved shielding and physical support for the isolator. The isolation is again provided by a continuous piece of Teflon, which fills both half-wave line sections and extends three-quarters of an inch beyond the gap on the inside of the outer conductor. The closest physical spacing between the two sections of the outer conductor is 60 mils of Teflon, occurring at the gap in the outer conductor. The shortest air gap between the two sections is 371 mils, occurring between the extension of the outer conductor of the second half-wave line and the outside of the outer conductor of the first half-wave section.

The isolating gaps in the inner and outer conductors are spaced one-quarter wavelength along the transmission line to provide for cancellation of reflections generated at each gap. This spacing is maintained by the final coaxial-line adaptors at each end of the isolator. The adaptors also provide physical centering support for the inner conductor. Two polyfoam beads are used in the isolator to provide centering during installation of the unit.

The second fixed coaxial-line adaptor is coupled to a panel-mounted adaptor through a tapered section. This tapered section serves as a transformer from the 50-ohm air line to the panel-mounted adaptor for solid-dielectric cable. The panel-mounted adaptor receives a UG-154/u plug for RG-17/u cable. The high-voltage isolator has been tested at a potential of 8000 volts across both the inner and outer conductor with no indication of breakdown.

The VSWR of two isolators is shown in Fig. 9. This was measured with the units terminated in a matched load. Over the design range of 2500 to 3100 Mc, the VSWR is lower than 1.5.

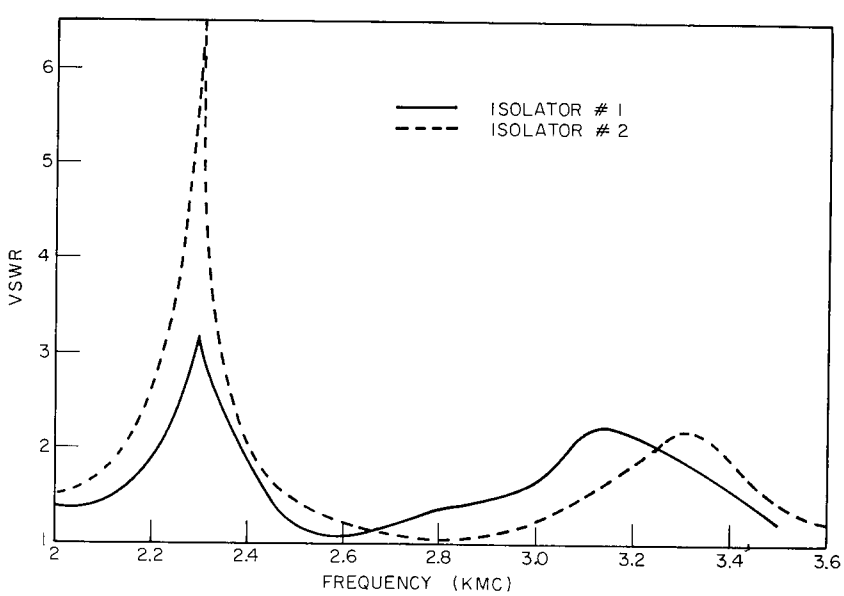

Fig. 9 – VSWR versus frequency for two isolators

The VSWR of the panel-mounted adaptor is shown in Fig. 10. This measurement was made with a four-foot length of RG-17/u cable terminated in an AS-463(XA)/AP antenna which could be (but in fact was not) used with the system.

The overall VSWR of the assembled system looking into the first coaxial-line adaptor following the tube-output tapered section and including the antenna is shown in Fig. 11. Over the operating range of the tube, the VSWR does not exceed 1.75.

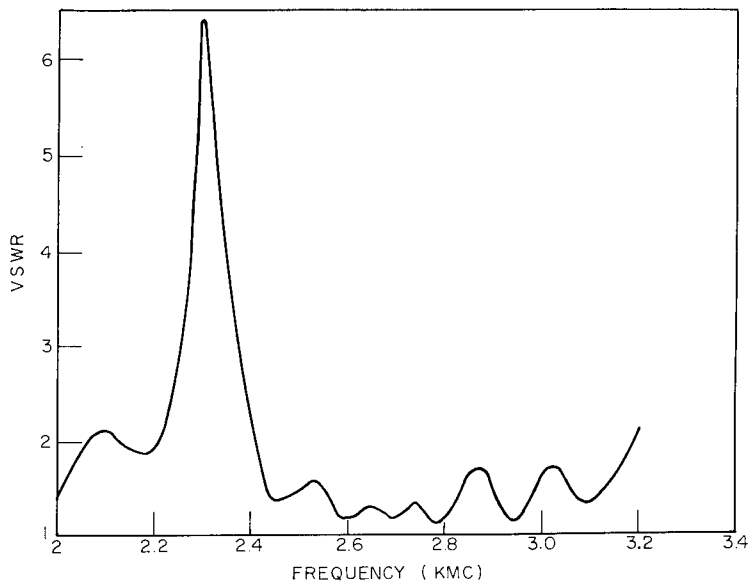

Fig. 10 – VSWR versus frequency of panel-mounted adaptor

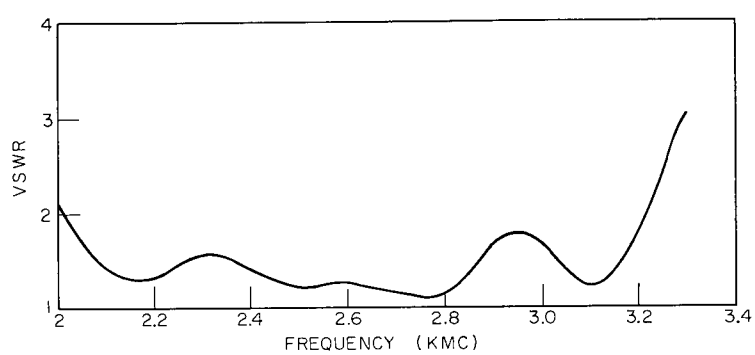

Fig. 11 – VSWR versus frequency of entire transmission line assembly

UNCLASSIFIED

THE MODULATOR UNITS

In consideration of the experimental nature of the jamming transmitter, it was thought advisable to build considerable diversity into the modulating equipment. Since the carcinotron has capabilities of being modulated both in frequency and amplitude, provisions were included in the jammer to provide each type of modulation separately. Thus, the final system includes two separately controllable modulating channels, one for producing AM and the other for FM, each completely self-contained but mounted as part of the transmitter unit. It was also possible to modulate the unit by an external low-frequency source.

Since the carcinotron is fundamentally a voltage-tuned device, the oscillator frequency is proportional to the voltage difference between the delay line and sole and therefore is tunable by variation of either voltage. In amplitude modulation of the tube, again two elements are available for its production, either the grid or the accelerator.

Several factors in the overall equipment design made the sole the choice for FM modulation. First, the maximum frequency variation allowable by sole modulation was determined to be well within the objective of 100-Mc total deviation. Secondly, certain circuit-design factors would create difficulties if it were desired to vary the anode voltage as against the sole. For example, if the series modulating element were located in the cathode return, the heater capacity to ground must be kept small so as not to bypass the noise components which, in this case, extend to 2.0 Mc. This would be not too difficult if ac were used on the heaters, but the need for a dc heater supply with small shunting capacitors and large rectifier and filter components would prohibit cathode modulation. If, alternately, the series modulating element is used in the high-potential lead, severe design considerations must be met in view of the extremely high voltage involved. An indirect method of noise-modulating the line with the series regulator in the anode supply was considered, but it was abandoned because the high modulating frequencies involved were not compatible with the regulation requirements.

The modulator, Fig. 12, thus contains two separate channels, individually controllable in all respects. Basically, both channels are very similar, the major variation occurring in the FM channel, where a variable peak limiter, or clipper, is used at the modulator output. The random noise is generated in each channel by a 6D4 gas triode operating in a 375-gauss magnetic field. After proper compensation to beyond 2 Mc, the noise voltage is amplified in a 6CL6 voltage amplifier whose output drives the paralleled sections of an 829B power amplifier. A four-position switch is used at the input of each 6CL6 which allows either the internal noise or an external signal to be used. The external signal is introduced into a front-panel jack for either channel. An additional feature permits both channels to be supplied from one noise source in case correlated modulation may be desired. However, the complexities of dual modulating channels, completely independent and separately controlled, were accepted to allow the study of uncorrelated noise modulation in the form of FM and AM.

With the various impedances involved, and considering the high voltage required from the modulator, the feasibility of coupling through a step-up transformer was studied. Very satisfactory results have been obtained with the circuit shown in Fig. 12. A flat spectrum was obtained between approximately 50 kc and 2 Mc at an amplitude in excess of 1000 volts peak-to-peak at the transformer secondary. In the case of the frequency modulator, this permitted rather severe clipping while still allowing the required 400 volts.

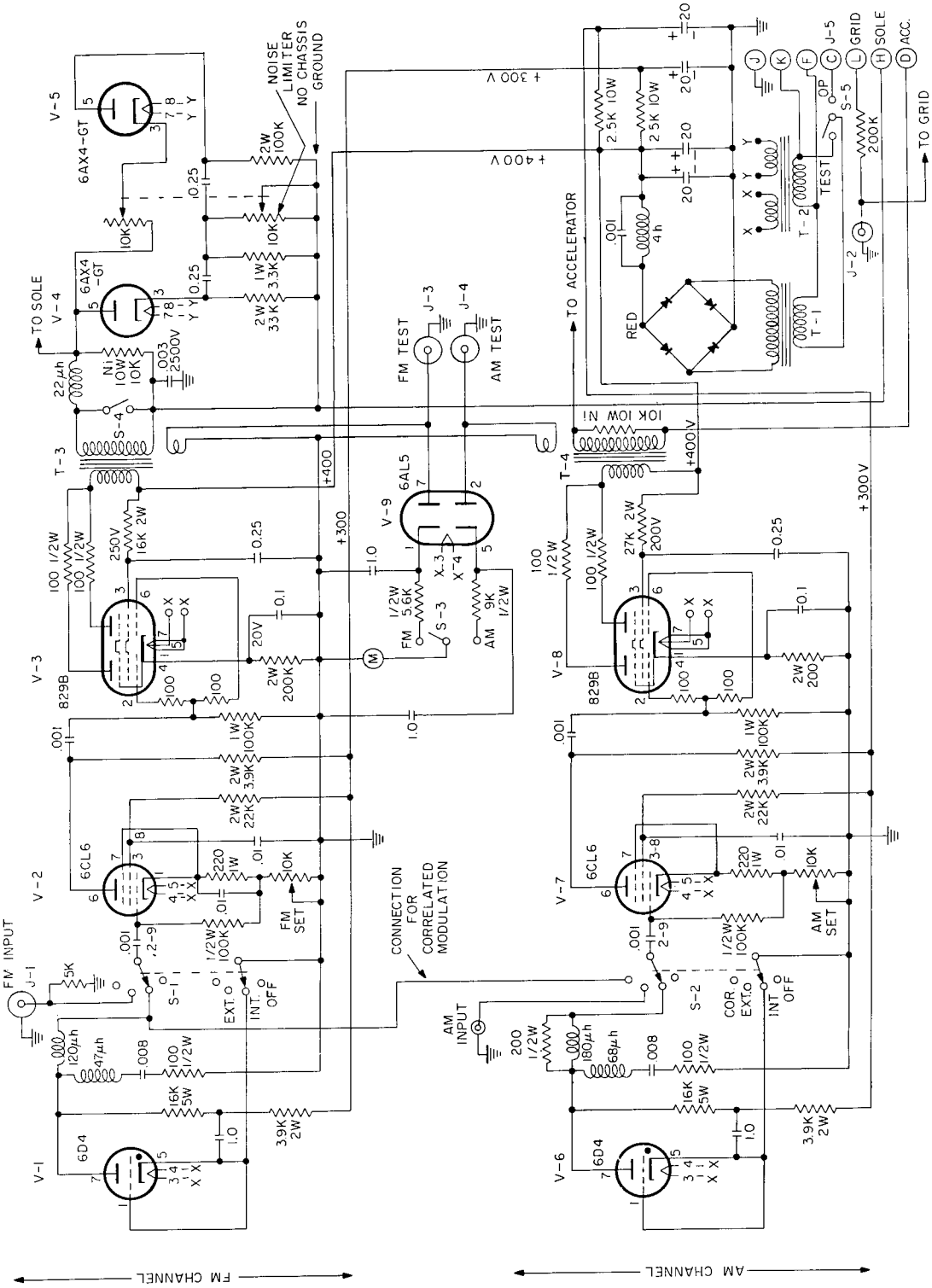

Fig. 12 – The modulator

UNCLASSIFIED

An additional tertiary coil of two turns was wound directly over each transformer secondary, its output having two applications. Connected directly to a front-panel jack, it allows sampling of the modulating waveform for measurement and analysis. Also, rectified in a 6AL5 diode, the current is indicated on a front-panel meter. By proper calibration, this meter can be used as an indicator of frequency deviation or degree of amplitude modulation.

When frequency modulation is generated by a noise spectrum of gaussian amplitude distribution, the power spectrum with frequency has a distribution such that the power at the extremes of frequency deviation falls off rapidly. The ideal barrage spectrum, on the other hand, is considered as having equal power density, or watts per megacycle, over its entire excursion. This predicates that the FM modulating noise voltage should be clipped or amplitude limited, to some degree. To determine the requirements, a variable peak limiter, or clipper, was added at the output of the FM channel. It comprises two half-wave rectifiers to produce symmetrical clipping. The degree of clipping is obtained by shunting a capacitor, in series with a variable resistance, across each diode resistor. This network varies the effective impedance across the transformer secondary, allowing a relatively wide degree of clipping. Due to the lack of symmetry in the random-noise output of the transformer, the two sections of the clipper, while not electrically identical, do produce amplitude symmetry at the modulated element of the carcinotron. The clipping control has a range of approximately two to one.

POWER-SUPPLY UNITS

The power-supply unit, Fig. 13, includes in addition to the high-voltage anode requirements a supply each for the grid, accelerator, and sole elements, all in one aircraft rack. For convenience and space considerations, the carcinotron dc heater supply is mounted within the transmitter unit, as is the regulator for the sole supply. Of particular interest is the use of semiconductor rectifiers rather than vacuum tubes throughout.

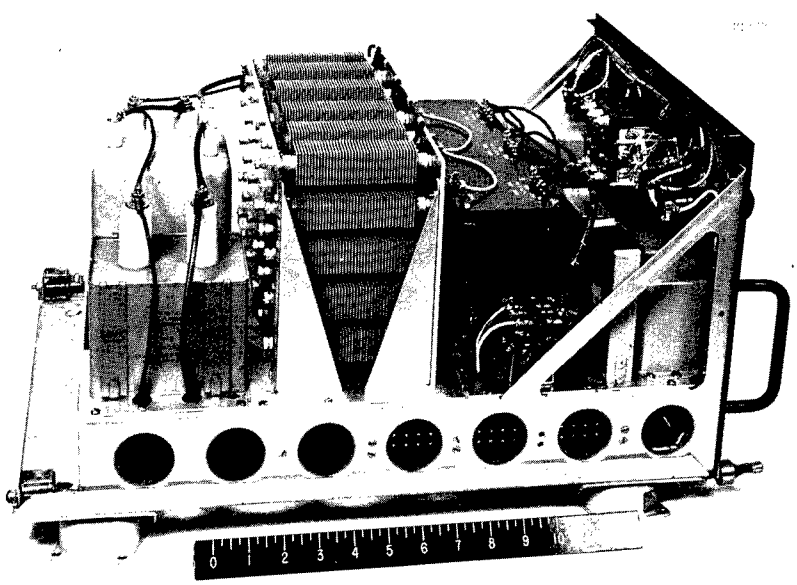

Fig. 13 – Left side of power-supply unit

The anode supply, Fig. 14, contains a three-phase bridge-type circuit capable of supplying 6000 volts at 300 ma. The initial design of the filter for the anode supply employed a single section based on a 2400-cycle ripple frequency. Instead of obtaining 5-percent ripple at 2400 cycles, the actual content was between 10 and 15 percent at 800 cycles. This deviation from the theoretical figure is caused by distortion and unbalance in the three-phase 400-cycle input. Since the power-supply characteristic available in an aircraft will probably be no better than that available in the laboratory, the filter was redesigned for 800 cycles. With the filter shown, the ripple content was reduced to less than 1.0 percent at the output, a value fully compatible with the requirements of the electronic regulator. Some thought has been given to the possibility of regulating the three-phase voltage ahead of the various rectifiers; however, it is felt that this would be cumbersome. To protect the anode, a current-overload relay was used to cut off the primary of the high-voltage supply in case of anode-current surges.

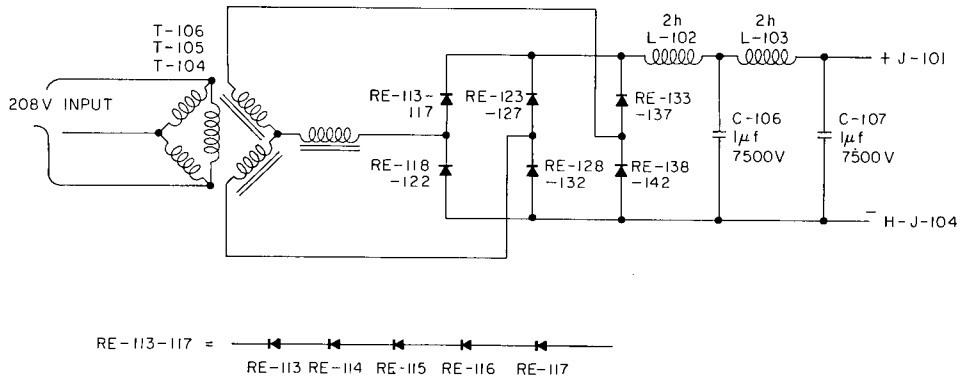

Fig. 14 – Anode-supply unit

The grid, sole, and accelerator supply (Fig. 15) each use a single-phase bridge-rectifier circuit. Since the grid and accelerator of the carcinotron draw negligible current, RC filters were used. The accelerator supply is interlocked to prevent the application of accelerator voltage before anode voltage. If the accelerator voltage is applied without anode voltage, the tube current will divert to the accelerating anode and burn out the tube. No overload protection is required in these two supplies, because the high impedance of the resistance-type filters causes sufficient voltage drop for tube protection in case of an overload. The accelerator supply is capable of 1500 volts output and is adjustable from 500 to 1500 volts by means of two potentiometers. A meter mounted in the transmitter unit can be switched into the circuit to indicate accelerator voltage. The grid supply is capable of 1500 volts output and is adjustable from zero to -1500 volts by means of a switch and potentiometer.

The sole current is negative over the tuning range, with electrons flowing to the sole, and it has been found to be as much as 60 ma for some tubes. Therefore, the supply was designed to deliver 80 ma, and an LC filter is used. The output of the sole supply is regulated by a series electronic regulator, shown in Fig. 16. A regulator was required because the frequency of the tube varies as E/B, the ratio of electric to magnetic field intensity. Field E in turn is a function of both anode and sole potentials. In order to prevent undersired frequency variation, especially with amplitude modulation, the sole supply must be well regulated or must have low impedance. Because of the negative

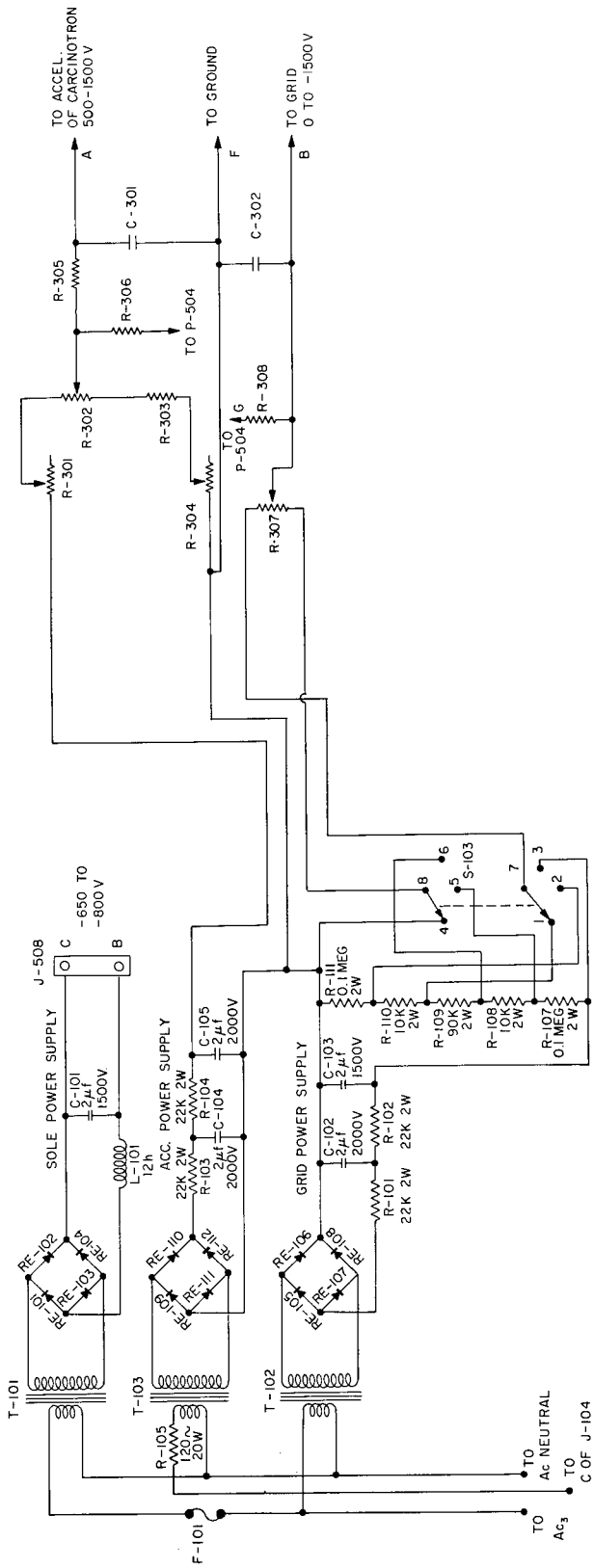

Fig. 15 – Sole, accelerator, and grid supply

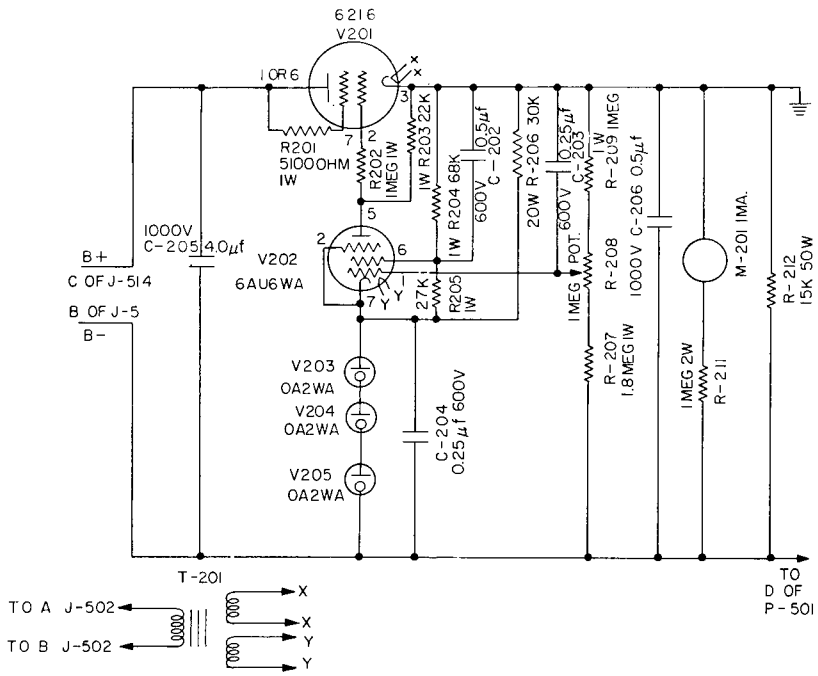

Fig. 16 – Sole regulator

current which the sole draws, a resistance load is placed across the regulated output of the supply. This assures that positive current is taken from the supply; thereby regulation is obtained under all operating conditions. The sole supply is variable from -650 to -800 volts, and the output voltage can be read on the voltmeter located on the transmitter unit.

The filament supply shown in Fig. 17 is of the full-wave type, and the filter choke is preceded and followed by 6000-μf capacitors for satisfactory ripple suppression. A variac is provided in the control unit as a means of applying the heater voltage gradually, and an interlock requires that the variac be returned to zero before heater power can be reapplied. This is to protect the tube during its warmup period. Instructions recommend that 30 seconds be utilized for bringing the heater current to its rated value.

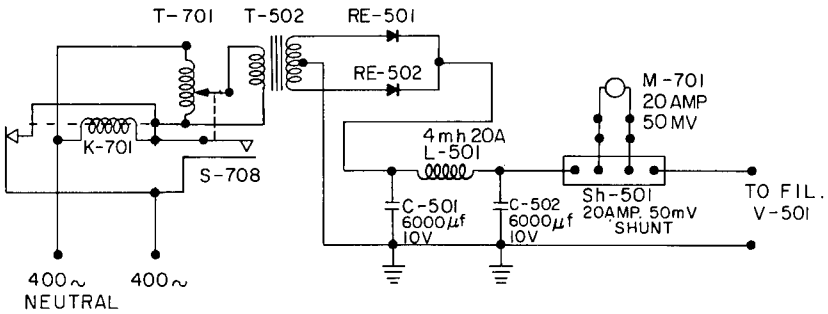

Fig. 17 – Filament supply

UNCLASSIFIED

Direct current was used for the heater, because undesirable FM at the primary line frequency occurs with ac on the carcinotron's heater. The effect is not the result of cathode variations in temperature but rather an induced interaction with the magnetic field, which leads to the requirement for the dc heater supply.

REGULATOR UNIT

The anode-voltage regulation requirements for the carcinotron are somewhat beyond those usually encountered for magnetrons and conventional tubes. The successful operation of the tube depends on the degree of regulation, and if the tube is to be used as a spot jammer in a cw or AM mode, the carrier deviation due to ripple on the anode must be severely limited. This requirement is somewhat mitigated when the carcinotron is to be operated as a barrage jammer with high FM deviation. However, it is still considered necessary to limit carrier deviation due to ripple, to the extent that it is a small fraction of the total deviation. Since the narrow-band modulation requirements hold for this transmitter, it was necessary to limit deviation due to ripple to the minimum consistent with weight and space requirements.

The functions of both anode voltage regulation and electronic tuning are combined in one series regulator (Fig. 18). The ratio of frequency change of the carcinotron to anode-voltage change over the operating range is approximately 0.3 Mc/volt and requires that both the ac and dc responses of the regulator be rather precise. The tuning range of the carcinotron requires a voltage that is variable between 3 and 5 kv at approximately 200 ma.

As shown in the schematic diagram (Fig. 19), tetrode tube type 4-400A was selected for the series regulator, with two tubes in parallel and a type 2C53 as a feedback amplifier tube controlling the regulator-tube bias. The problem of screen voltage was solved by using a series dropping resistor and gas regulator tubes. Since the 4-400A screens draw negligible current under all operating conditions imposed on the tubes when used as regulators, the need for a floating screen supply is eliminated. In the absence of an external load, the control network draws sufficient current to fire the gas tubes.

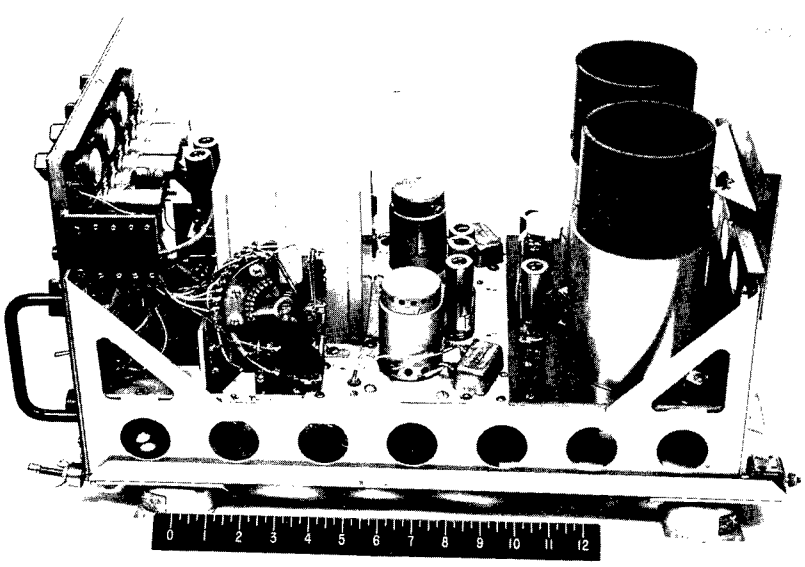

Fig. 18 - Right side of regulator unit

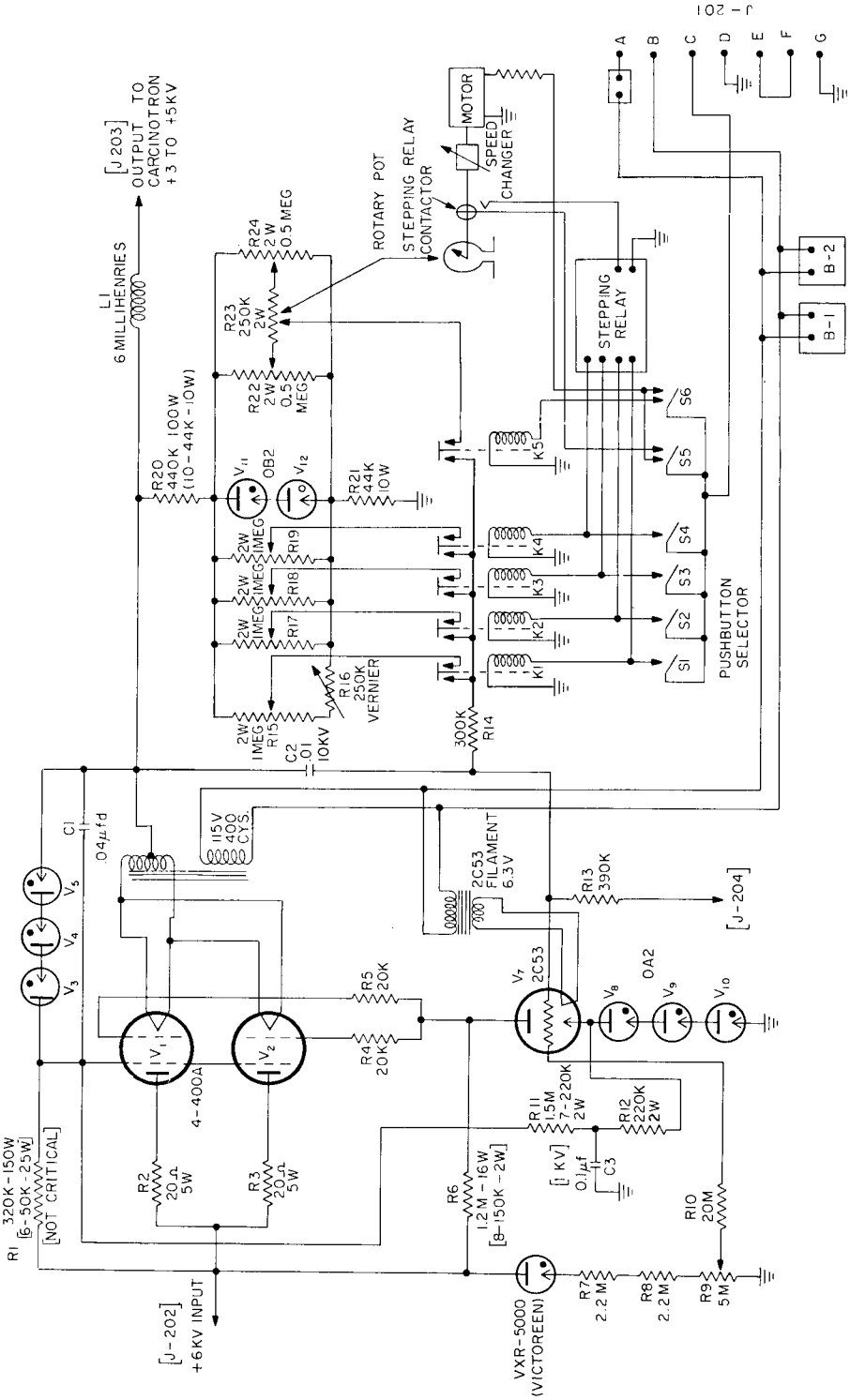

Fig. 19 – The regulator unit

UNCLASSIFIED

The 2C53 feedback amplifier tube is controlled by changing the bias on its grid in the usual regulator fashion. The difficulty of finding regulator control tubes at the voltage employed makes it necessary to forego any cascade arrangements. Consequently, the single 2C53 is regulated in a dual fashion, externally by manual tuning and also by controlling the unregulated primary potential applied to the grid of the 2C53 through a resistor network and a high-voltage gas tube used as a voltage-divider device. This arrangement functions primarily to counter long-time-constant transients occurring in the 400-cycle lines. The resulting output voltage from the regulator is constant to within 0.01 percent of the highest voltage supplied to the transmitter.

The various operational features for control of frequency are as follows. Six pushbuttons are provided on the control unit. Four of the buttons energize relays, any one of which connects the grid of the control tube to its respective potentiometer, which in turn determines the voltage of the regulator. The fifth pushbutton is used to energize a stepping relay which will select each of the four frequency positions in a sequential order with a variable "dwell time" on any one position of from 4 to 25 seconds. The dwell time is altered by changing the speed of a shaft coupled through a continuously variable speed changer to a constant-speed motor. Attached to the shaft is a contactor which is used to advance the stepping relay each revolution. The sixth pushbutton is used to provide a continuous sawtooth sweep over the entire tunable band at a maximum sweep time of 4 to 25 seconds. This is accomplished by attaching a rotating potentiometer to the variable-speed shaft. The fixed terminals of the rotating potentiometer are connected to the variable arms of two potentiometers which may be used to set the frequency band being swept to any sector position within the overall band, and to any bandwidth. The rate of frequency sweep when used on a given sector depends on the sector bandwidth.

COOLING UNIT

The cooling unit (Fig. 20) circulates silicone fluid through the carcinotron at a rate of about 0.75 gpm. The silicone is cooled by a heat exchanger with a coaxial fan drawing air at the rate of 200 cfm. Tygon tubing with quick-connect self-sealing fittings are used for connection between units, while copper tubing is used within the units, except where high-voltage isolation is required. Ten inches of Tygon tubing is used to connect to the tube to give sufficient high-voltage isolation. With the silicone coolant in the system, the warmup time is very long. In order to shorten this time, the fan used to cool the liquid is connected through a thermal switch in the liquid line which disables the fan until the liquid reaches its normal operating temperature, after which time it cycles on and off. With this arrangement, the warmup time is about one hour. A liquid-flow swith and a high-temperature switch are connected into the interlock system to protect the tube from loss of cooling. A circuit diagram of the cooling unit is shown in Fig. 21.

CONTROL UNIT

To enable the system to be controlled from a remote point, a control unit was designed, as shown in Fig. 22. The filament control is located at the control unit and the filament current can be read on a meter. Anode voltage can be applied, which places the equipment in a standby condition. To obtain rf power from the system accelerator, voltage is applied by a switch in the primary circuit. Similarly, modulation can be applied. Lights are provided to indicate the operating condition of the system. The tube anode current can also be measured on a meter. Figure 23 gives the complete diagram of the control unit.

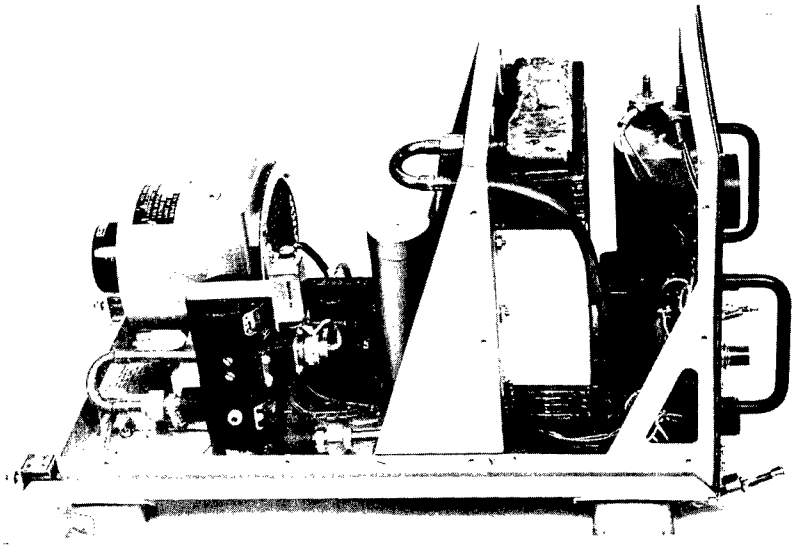

Fig. 20 – Left side of cooling unit

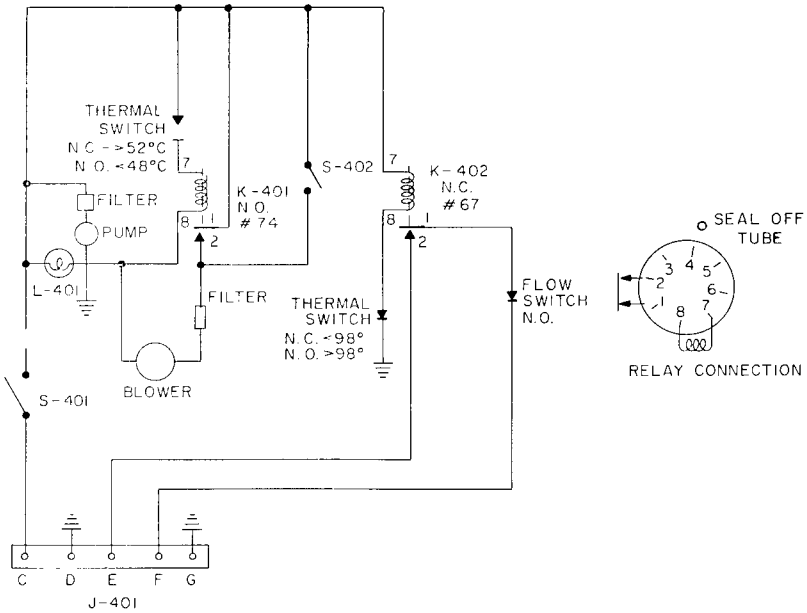

Fig. 21 – The cooling unit

UNCLASSIFIED

Fig. 22 – Front view of control unit

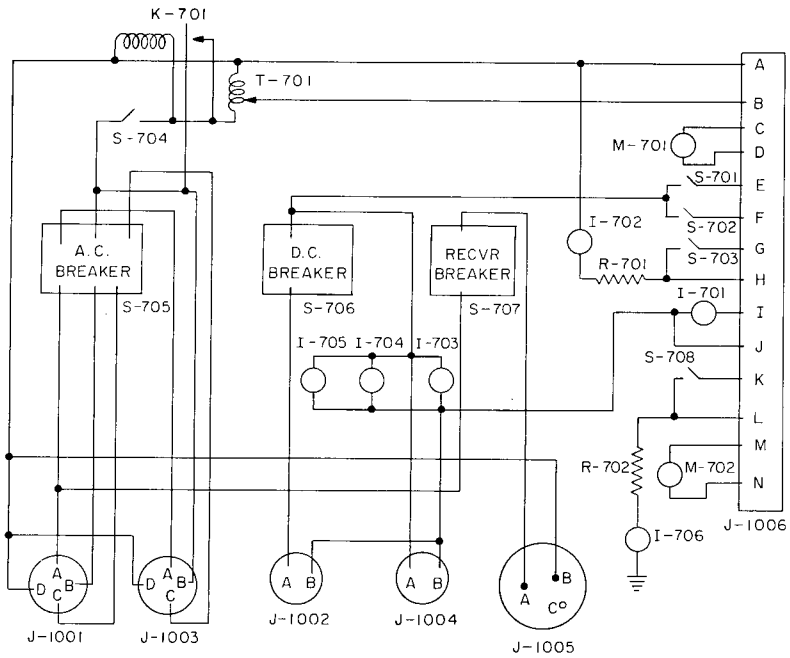

Fig. 23 – Control unit

RECEIVER UNIT

To allow greater advantage in applying the wide-band countermeasure signals possible with a carcinotron, a receiver was designed whose characteristics are compatible for use in a carcinotron jamming system. The receiver is composed of mechanically swept cavities, the detected and amplified output of which is presented on the face of a cathode-ray indicator that has been calibrated in frequency. Designed to be the same as that of the French CM 710 carcinotron, the frequency range of the S-band rf head is 2500 to 3100 Mc, but it can be extended by a cam change to cover 2230 to 4450 Mc. Although the frequency calibration is not one of extreme accuracy, the setting of a jammer on an intercepted enemy signal is not inhibited, for it is possible to bring the interfering signal into nearly exact correspondence without a precise knowledge of the frequency. Should the mission of this receiver be one of intercept or surveillance in aircraft where some knowledge of the frequency is required, a trained operator may obtain it to within ±10 Mc.

This receiver, capable of detecting a tangential signal of -42 dbm, proved adequate in flight checks of the NL/ALQ-F carcinotron jamming system. For applications in which greater sensitivity is needed, the addition of a traveling-wave-tube amplifier will permit a tangential signal sensitivity of at least -70 dbm. The receiver, weighing 40 pounds including the plug-in S-band rf head, is encased within approximately the dimensions of one full ATR rack (Fig. 24).*

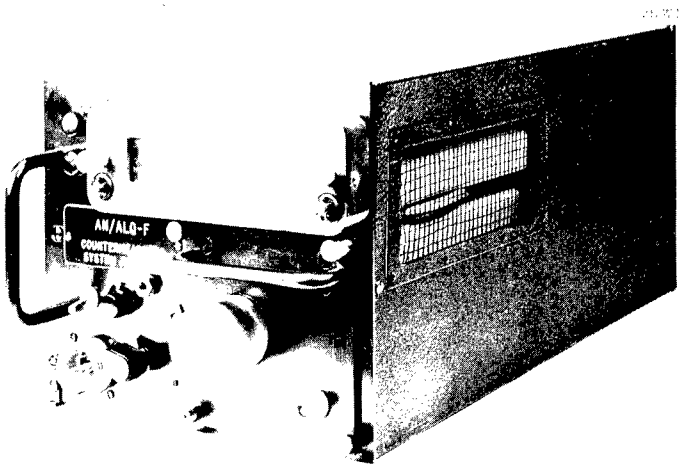

Fig. 24 – Right side of receiver

LOW-FREQUENCY MODULATOR

To reduce the danger from guidance systems that can use the interfering signal for beam riding, provision is made for jammer modulation at the angular nutation rate of the radar's conical-scan frequency. This low-frequency modulating signal can be used for either AM or FM and is intended to falsify the target angular position. Although this

*G. C. Page, Jr., "A Sweeping Countermeasures Receiver," NRL Report 4914 (Confidential Report, Unclassified Title), Apr. 1957.

modulation type can be used independently of the normal video modulation, it is intended that it normally be superimposed on the noise-modulated signal, so that both range and angular data will be simultaneously denied the radar. Figure 25 shows the agc video and detector circuits used with the NL/ALQ-F (XB-1) system. The radar's video was obtained through a separate antenna and crystal detector unit not shown on Fig. 25. It is necessary to have 70 to 90 db attenuation between this antenna and the system transmitting antenna. A separate audio amplifier was required to amplify the video (Fig. 26). Provisions are also provided to enable the transmitter to be modulated by an external signal. The low-frequency modulator is shown in Figs. 27 and 28.

SUMMARY

The NL/ALQ-F (XB-1) S-band jamming system was designed as an experimental airborne jammer to take advantage of the electronic capabilities of the CM 710 carcinotron and to provide advantages heretofore unavailable with older tubes. Of particular interest is its use as a wideband barrage jammer operating in conjunction with a panoramic receiver, displaying at once a frequency presentation corresponding to the full transmitter tuning range. The relatively broad-band nature of the barrage signal does not require precise set-on and thereby overcomes the inherent lack of resolution of such a broad-band display. In addition, when several signals are grouped closely in frequency, the barrage signal can be used to jam the combination simultaneously. Again, where several signals are dispersed more than can be accommodated by the barrage signal, the individual frequency of each signal can be electronically recorded; thereafter, up to four such frequencies can be jammed automatically in sequence without loss of time between signals.

Another system feature is the versatile facilities for modulation, which are tabulated as follows:

- Modulating Signals

  Internal video noise modulation

  External video modulation as desired

  Low-frequency modulation for jamming nutation frequencies

- Modulation Types

  Accelerator modulation for AM with noise or other video signals

  Sole modulation for FM with noise or other video signals

  Grid modulation for AM with low-frequency signals

  Anode modulation for FM with low-frequency signals

  Any combination of modulation types.

Electrically, the system is generally conventional, except that the rf source, the carcinotron, is operated with a grounded cathode, while the anode or body of the tube is on the high-potential side of the high-voltage supply. Semiconductor rectifiers are used for all dc supplies.

UNCLASSIFIED

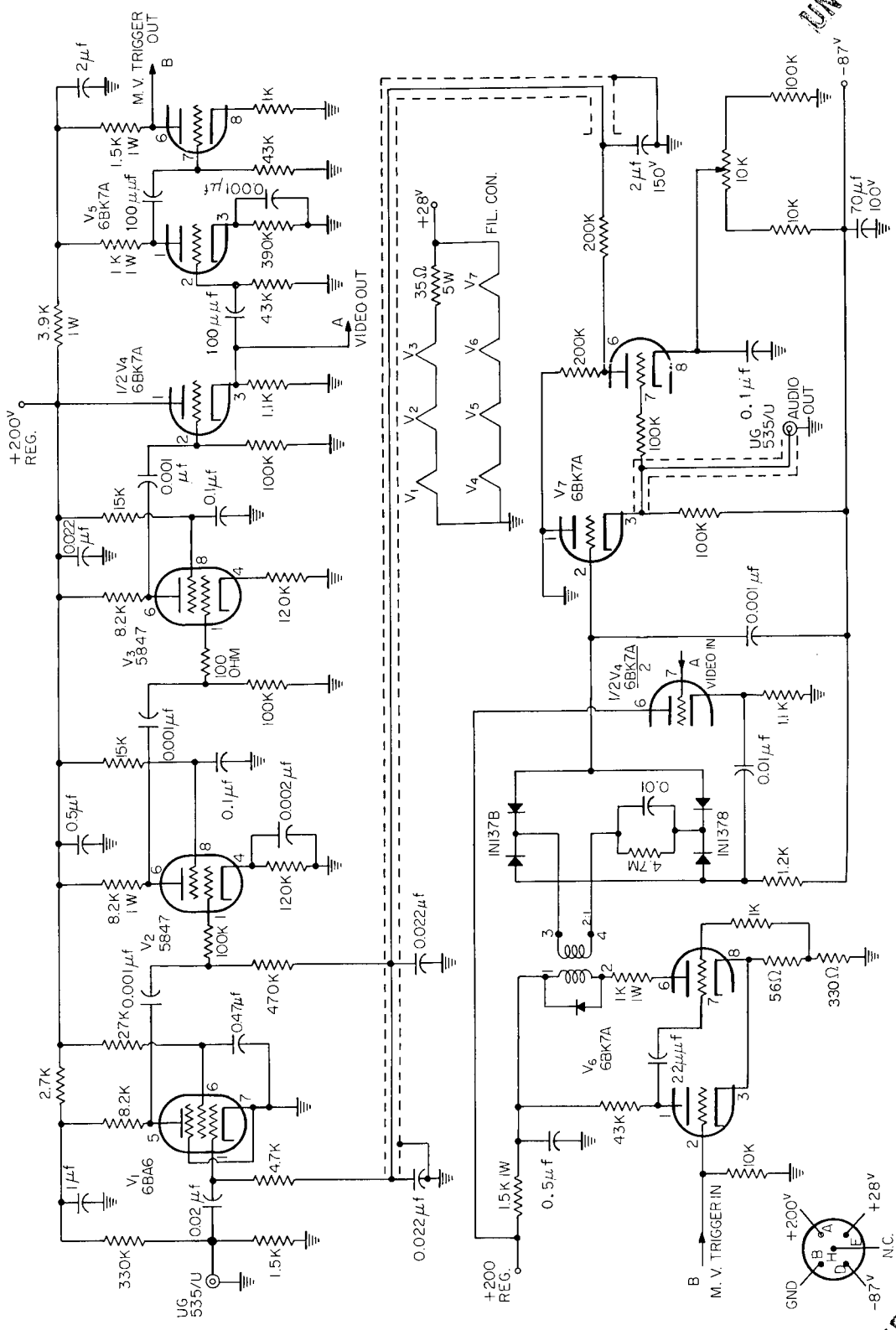

Fig. 25 – AGC video and detector

UNCLASSIFIED

UNCLASSIFIED

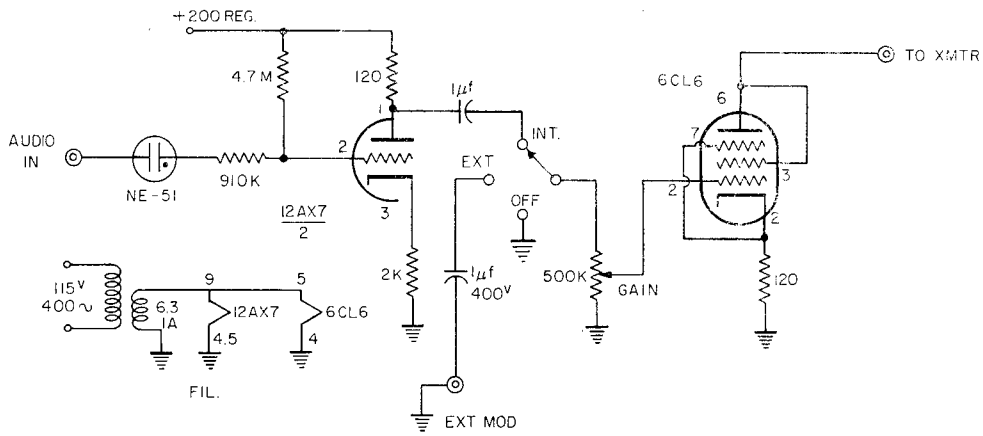

Fig. 26 – Audio amplifier

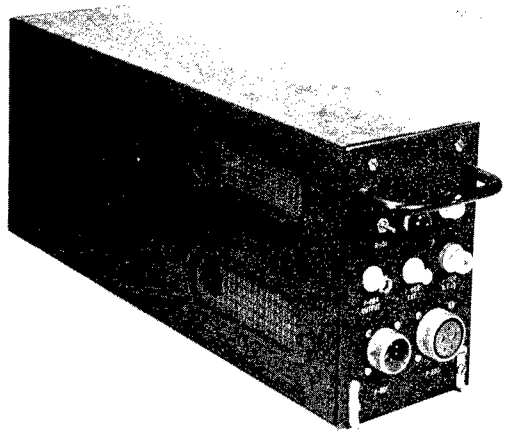

Fig. 27 – Side view of low-frequency modulator unit

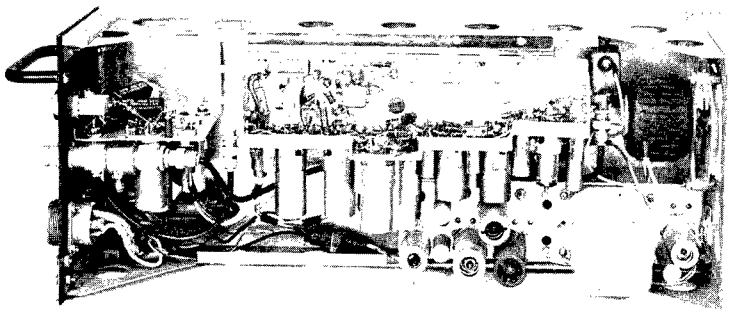

Fig. 28 – Inside view of low-frequency modulator unit

UNCLASSIFIED

Physically, the system weighs about 350 pounds and occupies about seven cubic feet of cabinet space. Since this equipment was urgently needed, and in view of its experimental nature, no great emphasis was given physical considerations, other than that it meet the need for airborne evaluation tests at low altitudes. It is considered that with advanced techniques, a jammer using the carcinotron could be designed which would be considerably more compatible with aircraft requirements.

As a tube type, the carcinotron does not appear to compete with the magnetron from the physical standpoint. The magnetron, however, lacking flexibility, may never be as suitable for use against newer radar types with advanced anti-jam techniques, nor does the magnetron offer the facility for jamming operations against multiple radar installations.

The degree of frequency drift with warmup using the CM 710 is not considered acceptable without automatic and continuous set-on. More recent tubes, however, are reported to be improved in this respect.

* * *

UNCLASSIFIED