[redacted]

NRL Report 5324
Copy No. 106

UNCLASSIFIED

AN IMPROVED PULSE RADAR TRANSMITTER SYSTEM FOR CROSSCORRELATION RADARS

[redacted]

R. G. Cumings and G. A. Skaggs

Radar Techniques Branch
Radar Division

July 10, 1959

[redacted]

[redacted]

DECLASSIFIED: By authority of
OPNAVINST 5510.1H, 29 Apr 88
Cite Authority Date
C. Rogers 1221.1
Entered by NRL Code

U. S. NAVAL RESEARCH LABORATORY
Washington, D.C.

[redacted]

APPROVED FOR PUBLIC RELEASE
DISTRIBUTION UNLIMITED

[redacted]

[redacted]

[redacted]

[redacted]

UNCLASSIFIED

CONTENTS

Abstract	ii
Problem Status	ii
Authorization	ii
INTRODUCTION	1
SYSTEM REQUIREMENTS	1
TRANSMITTER EXCITERS	2
Pulsed Master Oscillators	2
Gated Amplifier-Master Oscillator	5
Doublers	8
POWER AMPLIFIER	8
General Considerations	8
Circuitry	9
Operation	12
GENERAL ASSEMBLY	13
Power Supplies	15
Driver	16
Line Preamplifier	16
CONCLUSIONS	16

[redacted]

[redacted]

ABSTRACT [redacted]

An improved 40-kw pulse power transmitter system with exceptional stability and flexibility for unconventional operation on 26.6 Mc and duty factors of 1/8 or less is described. A new method of improving frequency stability of pulsed oscillators is included. Problems of high-power amplifier stability are discussed and several solutions offered.

PROBLEM STATUS

This report describes a pulsed radar system and closely associated equipment which are part of a research-type radar. Work is continuing and subsequent reports will describe the antenna duplexer, receiving detection system, indicators, and system capabilities.

AUTHORIZATION

NRL Problem R02-23
Project NR 412-000, Task NR 412-007

Manuscript submitted April 20, 1959.

[redacted]

UNCLASSIFIED

AN IMPROVED PULSE RADAR TRANSMITTER SYSTEM FOR CROSSCORRELATION RADARS

[[redacted]]

INTRODUCTION

High-frequency pulse transmitters for powers in the order of kilowatts have not been developed to any significant extent until the past few years. Increased requirements with regard to frequency stability and maximum power have necessitated the improvement of transmitters heretofore considered adequate. Since the required frequency stability is approaching that of conventional frequency standards, considerable attention must be given to small details of the frequency-determining circuits and to environmental factors surrounding the equipment. To increase the average power to magnitudes limited only by the dissipation of the output tubes, again special techniques must be employed. A previous report* described a HF pulse transmitter for a radar system and the solution of some of the problems involved. The present report describes improvements in that system and, in addition, a second complete transmitter of advanced design. Both transmitters combine a master oscillator with a power amplifier and operate on 26.6 Mc with a 250-μsec pulse length and duty factor varying from 1/8 to 1/256 or lower.

SYSTEM REQUIREMENTS

In radar systems using crosscorrelation techniques, the target returns are compared with a sample of the transmitter signal and the result passed on to filters and doppler detectors. If the transmitter sample comes from a storage device and is the same pulse as the target return, then the frequency variations of the transmitter are canceled out and the stability of the transmitter is somewhat less than the bandwidth of the system prior to the correlator. If, however, the sample is the succeeding pulse from the transmitter, then the frequency stability required of the transmitter is comparable to the bandwidth of the entire system including the data processing portion following the correlator. To insure a completely flexible system, the transmitters described in this report were designed with the more stringent requirement in mind. The effective bandwidth of the system is 1/20 cycle, hence the short-term stability of the transmitter must be 1 cycle in 20 seconds or approximately 2 parts in 10^9 when operating on 26.6 Mc. Long-term stability is dependent on the bandwidth of the system prior to correlation and is satisfied as long as the transmitter frequency remains within ±3 kc of 26.6 Mc or approximately 12 parts in 10^5.

Power requirements vary with the maximum desired range. To improve the signal-to-noise ratio and to extend the range of the system to 450 miles for line-of-sight correlation of high-flying targets, approximately 40 kw pulse power was considered the minimum. A pulse power of 48 kw was chosen as the upper limit with general operation limited to 40-45 kw to insure longer tube life. It was felt that variable power would be a definite asset in evaluation of the radar, hence flexibility in the setting of final amplifier potentials was considered essential.

---

*F. E. Boyd and R. G. Cumings, "A HF Pulse Transmitter for an Experimental Cross-Correlation Radar System," NRL Report 4848 ([redacted] Nov. 1956

[redacted]

Extraneous modulation which would interfere with doppler measurements was required to be kept at a minimum. Since the system in operation measures dopplers from 0 to 90 cps the elimination of 60-cycle AM and its accompanying FM was deemed necessary. The operation of all power supplies with extremely low amplitude ripple frequencies of 120 cycles or higher was considered a minimum, particularly in stages following that from which the sample for correlation was extracted. The 60-cycle component exists in 3-phase power supplies with unbalanced feed lines; hence it was considered desirable to balance the loads on lines feeding such supplies.

Considerable attention was given to the type of transmitter system most suitable for correlation radar research. It was felt that the unit type of construction would be the most flexible and offer various modes of excitation as well as various levels of output. Figure 1 is the block diagram of such a system. By having variable supplies in the final stages one could cover the output level from a few watts to 50 kw peak. Similarly, the unit construction allows substitution of oscillators with special characteristics such as automatic frequency control or variation, timed multiplexing, and crystal control.

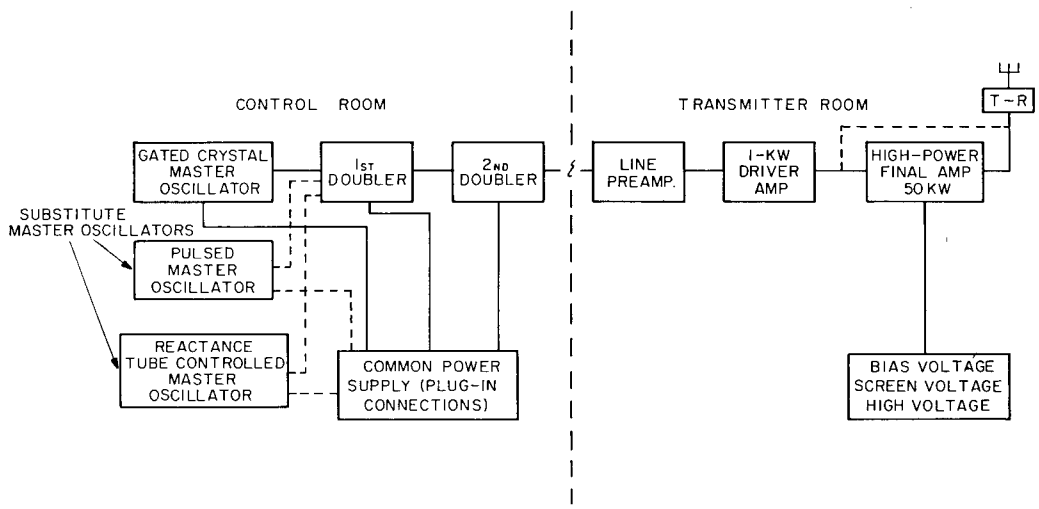

Fig. 1 - Transmitter system

TRANSMITTER EXCITERS

Pulsed Master Oscillators

Pulsed master oscillators are of two types, namely, the cw oscillator-gated amplifier combination and the directly pulsed oscillator. The latter was discussed in the previous report and details given on one way to accomplish the coherent type of pulse generation desired. Research was continued to improve the directly pulsed oscillator and a number of experimental configurations were tried. Among these were the

UNCLASSIFIED

Q-multiplier oscillator (Fig. 2), two types of cathode-follower-coupled tank-circuit oscillators (Figs. 3a and b), and the plate-pulsed Hartley circuit (Fig. 4). The first two of these four configurations obtained their pulse characteristic from the cathode follower loading the tank circuit as described in the earlier report. The plate-pulsed Hartley and the alternate form of the cathode-follower-coupled oscillator were modulated by application of the pulse directly to the plate.

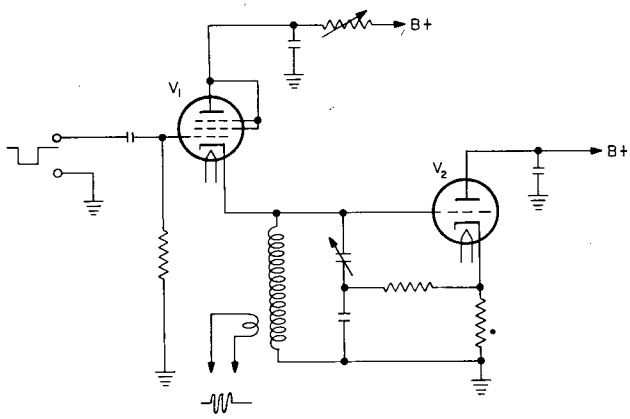

Fig. 2 - Pulsed Q-multiplier oscillator

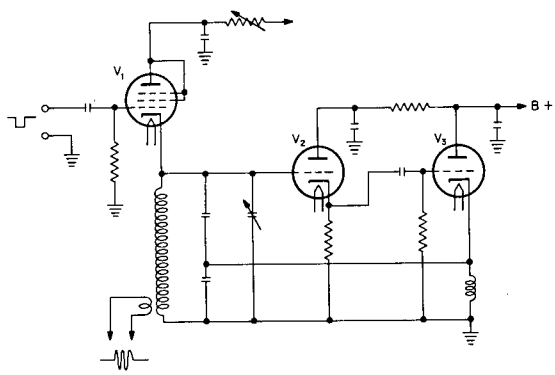

Fig. 3a - Cathode-follower-coupled pulsed oscillator

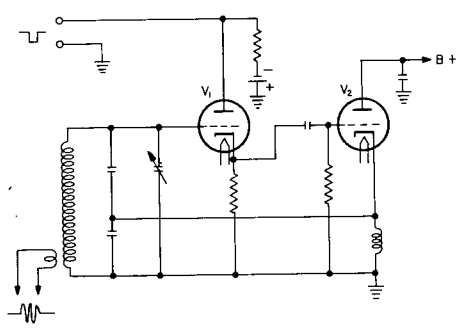

Fig. 3b - Plate-keyed cathode-follower-coupled pulsed oscillator

[redacted]

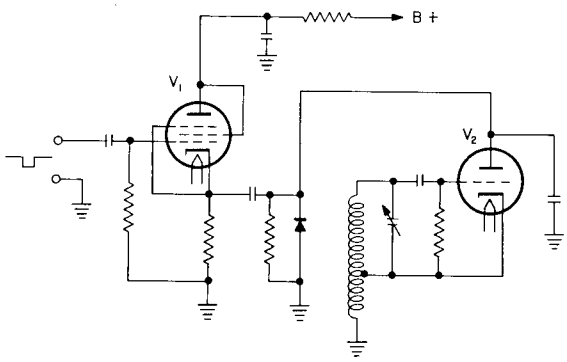

Fig. 4 - Plate-pulsed Hartley oscillator

The buildup of the oscillators was slow compared with that of the pulsed master oscillator of the previous report shown here in Fig. 5. With high-Q tank circuits to improve the frequency stability, the buildup inherently took a number of cycles to reach maximum amplitude oscillations. The buildup time was constant from pulse to pulse, but since the beginning cycle was of low amplitude, considerable phase jitter was possible under noisy conditions. Constant starting phase as well as coherence and frequency stability are rigid requirements for this type of operation; hence the oscillator circuits of Figs. 2, 3, and 4 were rejected.

It became apparent that the only way to achieve constant starting phase was to force the first cycle of oscillations to rise fast enough and high enough to resist any noise fluctuations. Our previous oscillator (Fig. 5) offered one method of solution, provided the new restrictions on stability could be achieved. The keyer tube produces a damped train of oscillations in the oscillator tank circuit, the amplitude depending on the rise time of the pulse and the amplitude of current flowing through the cathode follower prior to the pulse. The oscillator may be adjusted by means of the plate-dropping resistor R to continue the initial amplitude for the remainder of the pulse or to rise to a new level at a slower rate (Fig. 6).

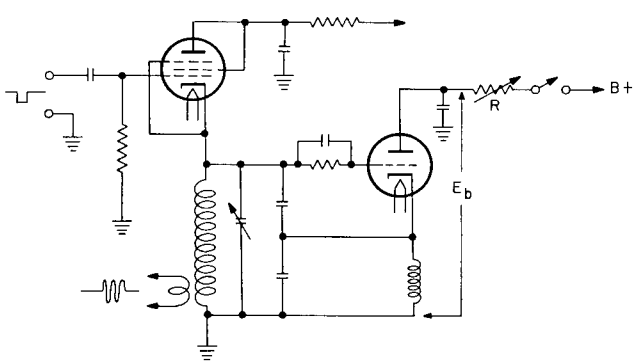

Fig. 5 - Grid-pulsed Colpitts oscillator

UNCLASSIFIED

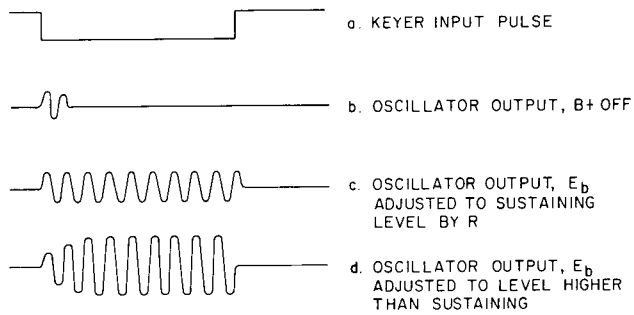

Fig. 6 - Effect of adjusting R in Fig. 5 on oscillations in the tank circuit

The initial cycle determines the starting phase; hence it makes little difference with regard to constant starting phase whether waveform c or d in Fig. 6 is chosen. However, for reduced sidebands and conservation of bandwidth the latter form is preferred. The degree of rise may be adjusted somewhat by choice of oscillator components. The amplitude of the initial cycle is dependent on the quiescent current through the tank coil; therefore, a keyer tube with a large plate dissipation must be used.

Another consideration of the keyer tube is its ability to cut off. If the tube does not completely cut off, any variation in plate or grid voltage varies the frequency of the oscillator. Frequency variation during the pulse degrades the correlation process unless correlation is performed with respect to a stored copy of the exact transmitter pulse. In a general system, however, this factor is to be reduced as much as possible.

The general range of tubes for use in this type of keyer (Fig. 5) is limited to those tubes with high plate dissipation and further to those with good cutoff characteristics. A survey of tubes such as the 6S4, 6CL6, 6AQ5, 6AB4, 6C4, and 5763 indicated some tubes were considerably better than others in this respect. Variation occurred in tubes of the same brand as well as of different brands. Notably good were the 6C4 and the 6S4A. Both tubes cut the plate current to 1 μamp with application of approximately -20 v on the grid; however, the 6C4 could pass only 23 ma of plate current at 150 v E_p without exceeding maximum plate dissipation, whereas the 6S4 conducted 40 ma with equivalent restrictions.

The improved pulsed master oscillator is shown functionally in Fig. 7a. V_2 is a keyer tube of the cathode-follower swamper type and V_4 is a conventional high-C Colpitts oscillator. V_1 is an identical tube to V_2 and functions as a keyer balance tube. V_1 conducts when V_2 is off; hence capacitor C_1 has only to absorb a very small variation, thus reducing oscillator frequency instability due to a changing plate voltage of the keyer tube. The output coupling coil goes to an isolation amplifier to prevent loading effects on the oscillator stability. A complete schematic of the pulsed variable-frequency master oscillator is shown in Fig. 7b.

Gated Amplifier-Master Oscillator

Pulse-gated amplifiers following a cw oscillator may be used in a crosscorrelation radar, provided the oscillator has sufficient frequency stability. In a pulsed oscillator

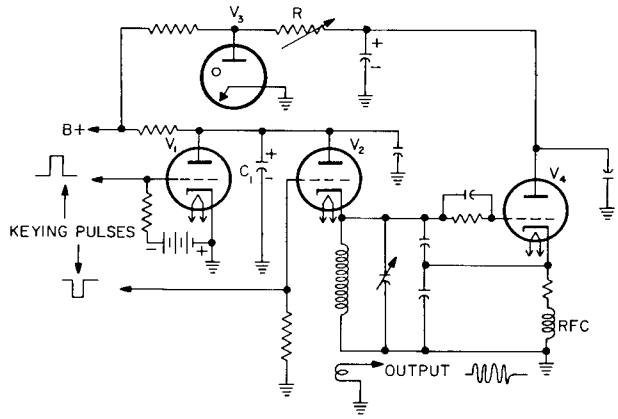

Fig. 7a - Functional schematic of the improved pulsed master oscillator

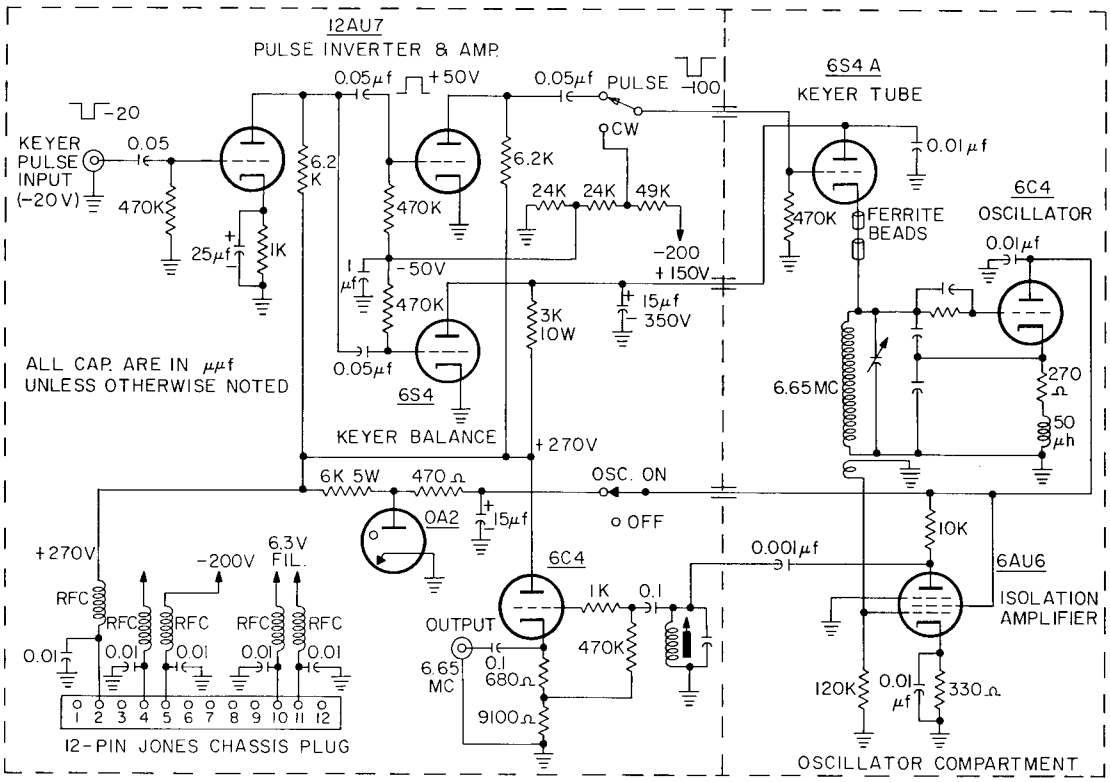

Fig. 7b - Complete schematic of the pulsed variable-frequency master oscillator

[redacted]

UNCLASSIFIED

any variation in phase, i.e., drift in frequency, toward the end of the pulse is automatically corrected at the beginning of the next pulse; hence a small amount of drift during the pulse may not degrade performance perceptibly. However, in a cw oscillator-gated amplifier system the drift from beginning to end of pulse is cumulative from pulse to pulse; hence the stability required is greater. The short-term frequency stability must be in the order of the effective bandwidth of the system for a period equal to the correlation period.

The crystal oscillator used is an International Crystal printed-circuit type rated at 0.001-percent accuracy, except that an alteration was made in the circuit to permit a capacitive variation across the crystal for accurately setting the frequency after warmup. The oscillator is housed in a shielded enclosure not only to reduce radiation but to provide some thermal inertia. Measurements after a half-hour warmup indicate a drift of 1.8 cycles (at 26.6 Mc, the 4th harmonic of the oscillator) in 4 hours. This is long-term stability in the order of 7 parts in 10^8. The short-term stability was not measurable but was at least 1 part in 10^9 in 20 seconds, the limit of accuracy of the available standard.

Figure 8 shows the oscillator and its associated gated amplifier. The gated amplifier uses a type 6BN6 because of its excellent cutoff characteristics. Only one stage was required because (a) the following amplifiers are operated well below cutoff in class C, and (b) the transmitter system doubles twice in succession, so that feed around is no problem. All power supply leads are filtered to avoid rf leaks. Oscillator filaments are operated on dc to prevent 60-cycle modulation. To facilitate observations of pulse shape, a capacitively coupled monitor output is provided.

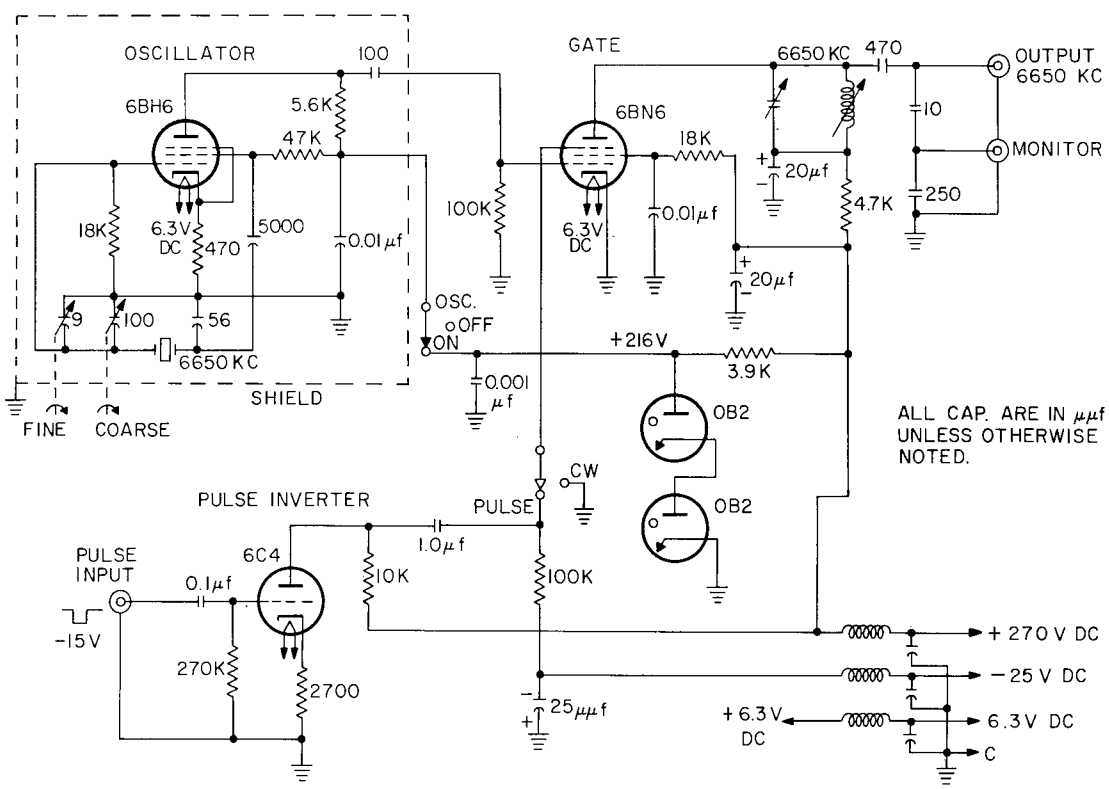

Fig. 8 - Gated amplifier-master crystal oscillator

[redacted]

Doublers

The 1st doubler is a conventional single-tube doubler. A push-push doubler of straightforward design is used as the 2nd doubler. The output is conventional tapped coupling to a 93-ohm coaxial line. Figure 9 is the schematic.

To facilitate identification of true target returns the output of the doublers is passed through a coaxial switch remotely controlled at the operating console. Operation of this switch removes excitation from the higher power amplifiers.

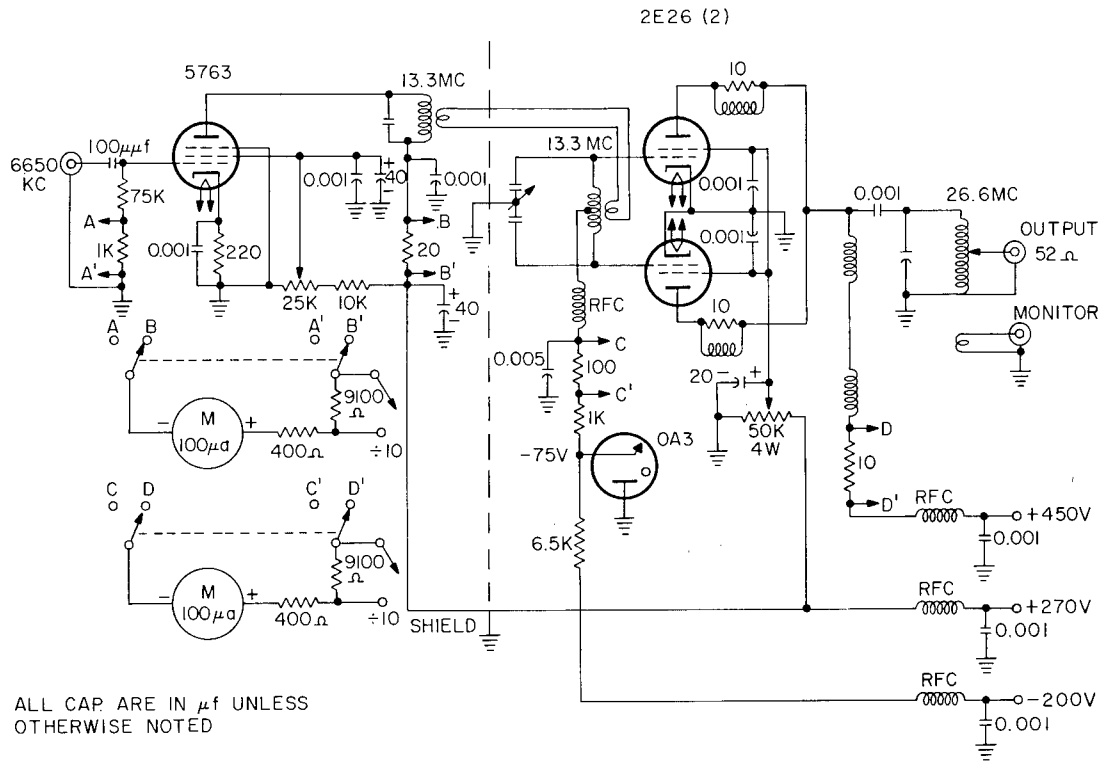

Fig. 9 - 1st and 2nd doublers

POWER AMPLIFIER

General Considerations

Development of high-power long-pulse amplifiers in the high-frequency region has been rather limited in the past. Communication-type transmitting tubes are indicated rather than conventional radar tubes because of the duty factor involved. Data regarding pulse operation of these tubes is also limited; hence a certain amount of experimentation

UNCLASSIFIED

is involved in development of this type of transmitter. The earlier report* deals with the preliminary calculations for typical operating points.

There are several choices of circuit configurations for high-power final amplifiers. The push-pull-output, parallel-output, and grounded-grid configurations are the most common. Grounded-grid operation is usually difficult at high power because of filament isolation problems; hence the choice is usually between the first two. The push-pull arrangement provides generally a higher degree of neutralization but has the disadvantage of a balanced output and a somewhat greater susceptibility to parasitic oscillations. The single-ended parallel output permits use of a pi-network tank, affording precise matching to a load, and an unbalanced coaxial output. For radar work, usually involving T-R switches, the coaxial output is usually more preferable. A Faraday shielded link may be used with a push-pull system for a coaxial output; however, the problem of maintaining equal loading of the tubes still exists. In addition, push-pull amplifiers require a split-stator capacitor, which is available in only very limited sizes at high voltage ratings, whereas conventional high-voltage single-section vacuum variable capacitors are readily available in a number of ranges. In consideration of the above, the single-ended configuration was accepted as the better system.

The plate and screen supplies for a high-power pulsed amplifier differ from those in a cw system mainly in requirements on regulation and the output time constant. For use in a pulse system the regulation must be good and the time constant of the output filter sufficiently high to prevent distortion of the pulse.

Circuitry

The circuit of the final amplifier is shown in Fig. 10. The amplifier is a single-ended pi-output network amplifier operating at 26.6 Mc designed for a maximum plate pulse power output of 48 kw, a 250-μsec pulse length, a 500-cycle prf, and a plate efficiency of 75 percent. Assuming a 90-percent output circuit efficiency, this would correspond to a 43.2-kw rms output pulse. The cables and T-R junction contribute to the losses; hence the peak antenna power would be somewhat less. The output power can be raised considerably by reducing the duty factor. Dropping the duty factor from 1/8 to 1/16 or more permits an output pulse power of 50 kw or greater. The dissipation of the tubes and the upper voltage limit of the tubes and components, in this case 15 kv, form the available upper limit of pulse power.

Effectively grounding the grid and plate circuits presented a problem. To avoid feedback between the two circuits due to chassis currents the plate circuit was grounded to the chassis and the grid and cathode were grounded to a small subchassis connected to the chassis at a single point. Figure 11 shows this arrangement.

Use of the subchassis ground also improved neutralization. Though not completely neutralized, the reaction between grid and plate circuits was reduced to a very low minimum. Neutralization was obtained from the capacitance between a piece of tubing with a rounded cap and the plate of the tubes. The tubing was necessitated by the operation at rather high voltages, which produces corona on sharp edges.

The pi-input capacitor was changed from an air-dielectric variable capacitor to a vacuum variable capacitor to prevent breakdowns when operating at advanced voltages. The pi-inductance and connecting straps were silver-plated to reduce rf resistance. The pi-output capacitor was left an air-dielectric capacitor, since the maximum rms voltage

*F. E. Boyd and R. G. Cumings, "A HF Pulse Transmitter for an Experimental Cross-Correlation Radar System," NRL Report 4848 ([redacted]), Nov. 1956

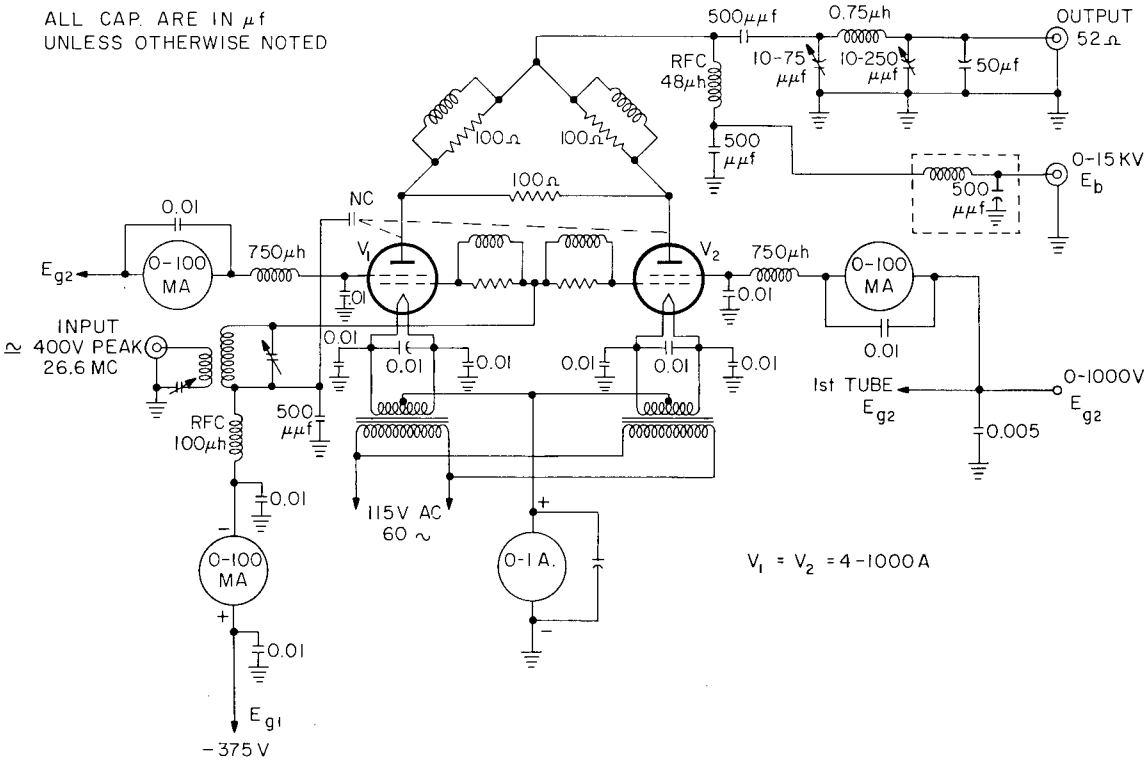

Fig. 10 - Final amplifier

across it at full output would be only 1600 v for a resistive termination. Even if the capacitor would be required to tune out reactance in the load, the 7000-v rating of the capacitor would be adequate for a small amount of reactance. To provide an increase in capacitance across the output more than the variable could provide, clips were installed for parallel vacuum capacitors.

Coupling and bypass capacitors in the plate circuit were of the cylindrical ceramic type. These capacitors have a rating of 30 amps at 20,000 v dc working. Tank tuning inductance was approximately 0.75 μh; therefore, use of these low-inductance capacitors helped the tuning problem by decreasing the distributed inductance.

Parasitic suppression was necessary with or without a load on the transmitter. Suppressors applied to the screen circuit were relatively ineffective. The suppressors in the plate circuit were very effective; however, they were subject to overload by the fundamental transmitted frequency. In order to increase the power rating of the parallel resistance without increasing the inductance, multiple carbon resistors were used in a special low-inductance copper plate arrangement. The configuration is shown in Fig. 12. It will be noted that there is a resistance from tube to tube. It was found that one mode of parasitic oscillation was of a push-pull nature between the tubes at a frequency of approximately 100 Mc. Use of the cross-connected resistors damped this mode of oscillation.

It was found that use of certain disc bypass capacitors in the filament and screen circuits produced instability. Examination of these capacitors showed that with a lead length of only 3/8 inch they had a resonant frequency near 23 Mc. Where possible these

[redacted]

UNCLASSIFIED

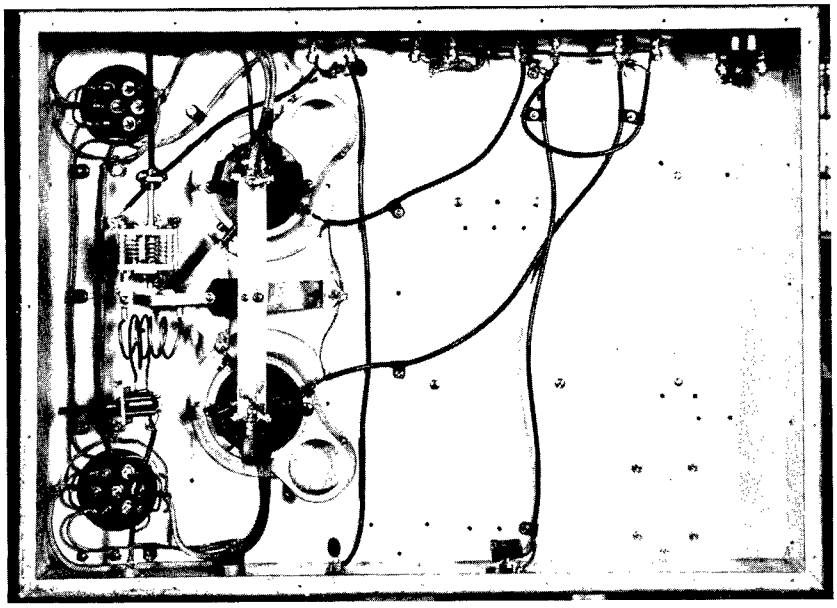

Fig. 11 - Bottom view of the final amplifier

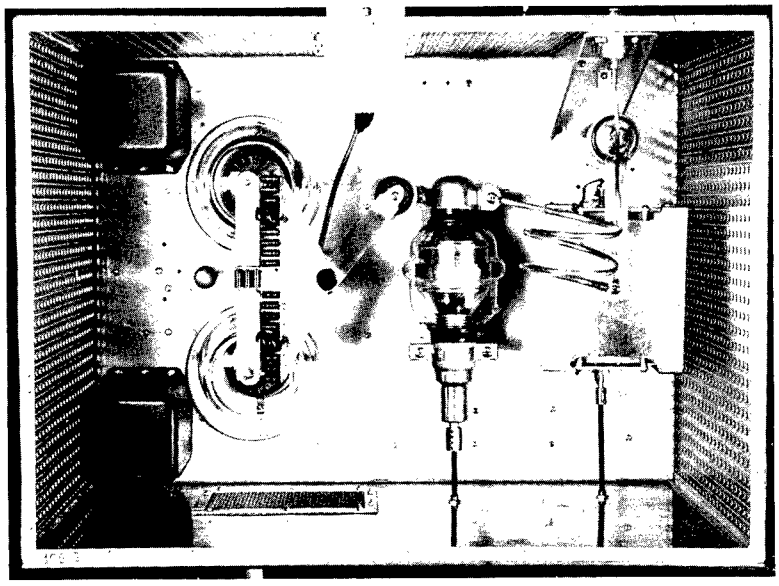

Fig. 12 - Top view of the final amplifier

capacitors were replaced with fixed mica or ceramic transmitting capacitors of equivalent value, and the instability was relieved. Experience has since shown that small cylindrical ceramic capacitors such as Centralab type 858-S or its equivalent to be the best type of screen bypass. Good screen bypassing was found to be the most important element in good neutralization.

Cooling of the tubes was effected by a single blower operating through a manifold connected to the bases of the tubes. To prevent other components from becoming excessively hot, especially the plate suppressor, a second blower was installed in the cabinet immediately above the amplifier to circulate air generally above the chassis. With this addition the plate suppressors showed less tendency to overheat.

Metering of the tube screens was done individually to assure equal loading. The cathode, grid, and filament circuits were metered collectively.

Operation

The operation characteristics of the final amplifier were beneficial in determining future design parameters. The more important characteristics were plots of system output efficiency versus grid current and screen voltage and peak power output versus screen voltage. The measurement setup is shown in Fig. 13. The Hewlett-Packard 410-B rf voltmeter is connected to the coaxial line by a capacitive divider. The divider has an indicated accuracy of ±1 percent over 10 kc but has reduced response at 500 cps, the pulse repetition frequency. There is some small error therefore in voltage measurement which later measurements indicate is in the order of 2 percent. Correspondingly, all powers and efficiencies indicated in the curves can be considered to be conservative and may be low by as much as 4 percent. All dc meters were found to be accurate within 1 percent.

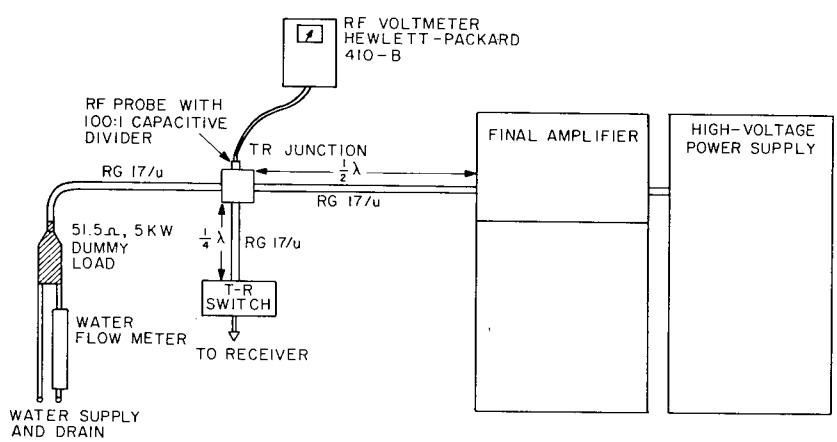

Fig. 13 - Setup to measure characteristics of the final amplifier

[redacted]

UNCLASSIFIED

Figure 14 shows the variation of output efficiency versus grid drive for successive values of screen voltage within the limits of element dissipation. It will be noted that at all screen voltages the efficiency increased with increased drive. The limit is obviously the grid and screen dissipation. However, the efficiency curve was beginning to flatten out at these end points and further drive would only have produced diminishing returns at the expense of excess drive requirements.

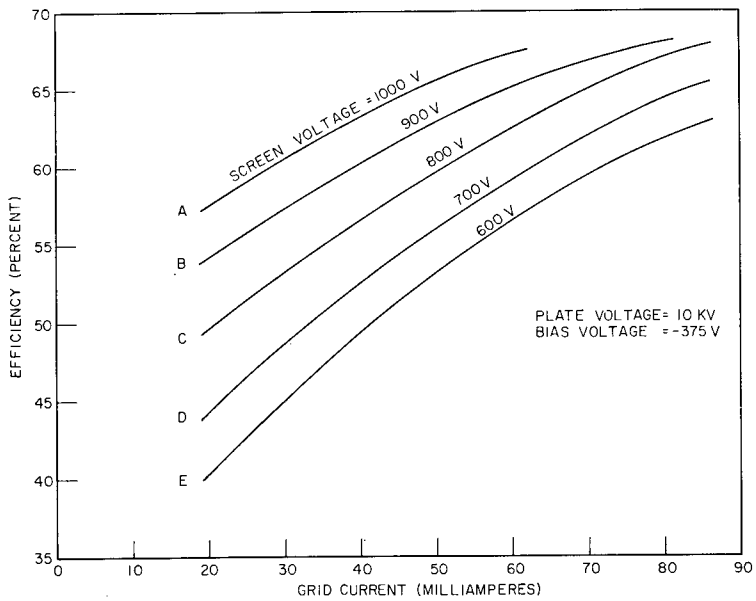

Fig. 14 - Characteristic curves of the final amplifier

Figure 15 shows the variation of pulse power output with respect to screen voltage, the plate voltage held constant. For increasing screen voltage one may note a tendency of the output to level off with higher values (for E_p = 10 kv). The curves for 11.5 kv undoubtedly would show the same characteristic if dissipation of the elements would permit further plotting. The full effect of different screen voltages is more apparent in the system output efficiency versus screen voltage curves shown in Fig. 16. The curves indicate that screen voltage should be as high as dissipation will allow for maximum efficiency of this type of operation.

GENERAL ASSEMBLY

The exciter is located separately in the main radar control room 250 feet from the power amplifier. Figure 17 shows the exciter assembly. The top panel is an oscilloscope connected to monitor the frequency difference between the exciter and the system standard. Two spare master oscillators are mounted in the lower part of the rack as well as circuitry to provide a triggering pulse for the TR chassis. Regulated dc supplies are located in the bottom panel and include a dc filament supply for the master oscillator to reduce hum modulation to a minimum.

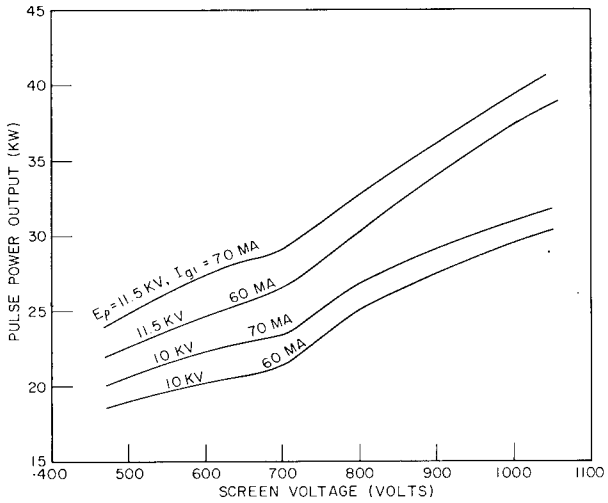

Fig. 15 - Characteristic curves of the final amplifier

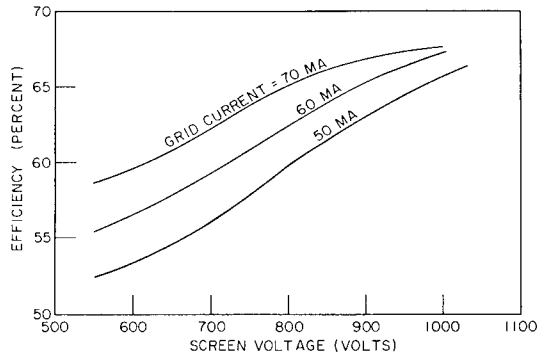

Fig. 16 - Characteristic curves of the final amplifier

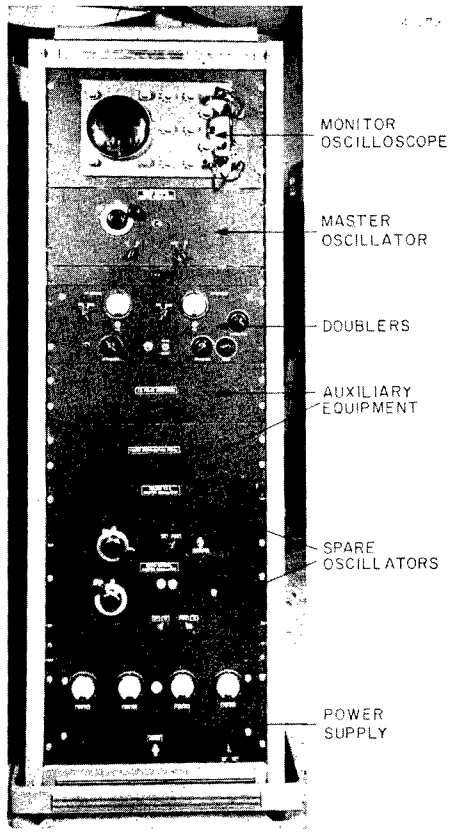

Fig. 17 - Control-room assembly: exciter and power supply

[redacted]

UNCLASSIFIED

The power amplifier, driver, line preamplifier, all associated power supplies, and auxiliary circuits are shown in Fig. 18. The high-voltage power supply is on the right of the amplifier and to the left is the auxiliary rack containing the T-R, output power meter, TR pulse monitor, receiver preamplifier, and minor accessories.

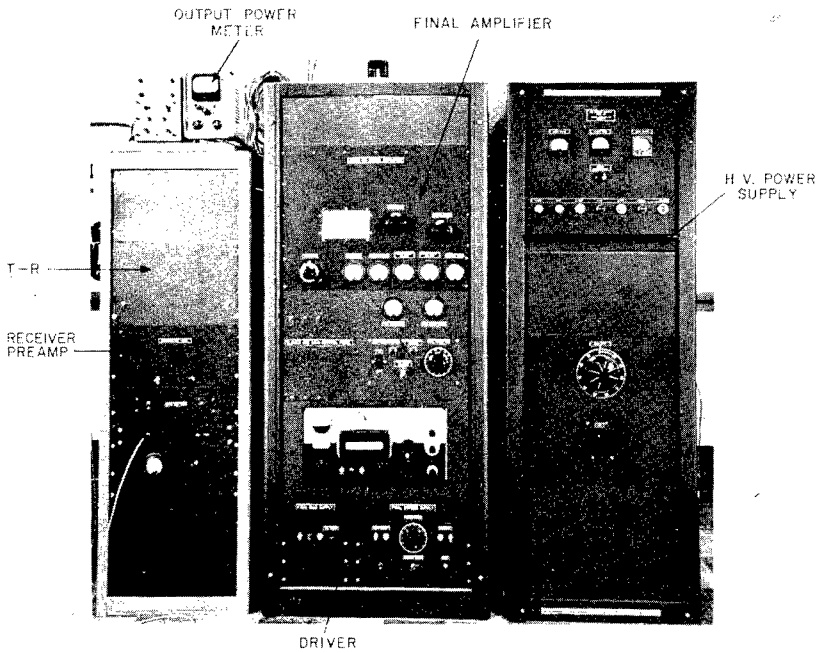

Fig. 18 - Transmitter-room assembly

Power Supplies

The final high-voltage power supply is a Variac-controlled 3-phase full-wave system rated at 0-15 kv, 750 ma. The output capacitor is a 1-μf 20,000-v oil-filled type, and considering the dc impedance of the amplifier to be approximately 2500 ohms, the time constant is approximately 2500 μsec. The pulse length is 250 μsec; hence the regulation during the pulse is 10 percent. An additional filter incorporating a 10-μf capacitor would reduce the regulation to nearly 1 percent; however the slight added advantage would not justify the high cost of the addition. Output current overload protection is provided by a cutout relay located in the negative lead of the power supply and is adjustable.

The screen supply is a conventional full-wave Variac-controlled 0-1000-v system. It has an adjustable overload relay for protection of the screens if the plate voltage is interrupted or the bias is lost.

The grid bias supply is rather novel. In order to maintain bias while drawing grid current, generally a regulated power supply is employed with a bleeder resistor. However, a circuit involving a low-mu power triode will effectively swamp most of the grid

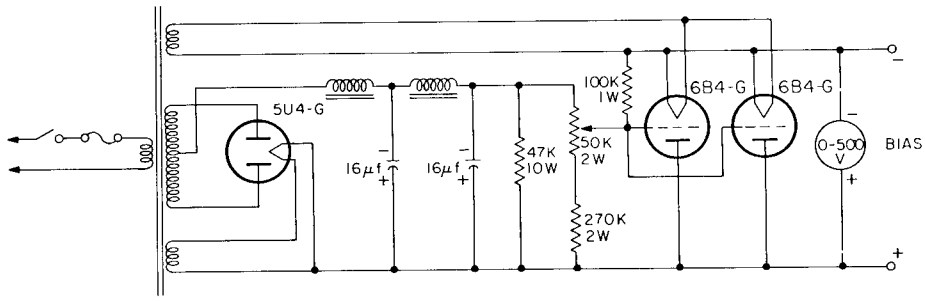

Fig. 19 - Grid bias supply for the final amplifier

current without consuming unnecessary power. Figure 19 shows the circuit used. Parallel operation of two 6B4's was necessary for the wattage required. The supply will adjust from -325 v to -400 v and regulates within 10 v from 0 grid current to 80 ma. Operation is fail safe; should the bias supply fail to energize, a large grid leak bias protects the amplifier grids.

Driver

The driver as diagrammed in Fig. 1 and photographed in Fig. 18 is a Johnson Thunderbolt. The Thunderbolt is rated at 1000 w for cw input and 2000 w peak envelope power on class B linear operation. A 1000-w peak pulse output may be obtained with a matched load. The grid bias supply is half wave and must be altered to prevent 60-cycle modulation. The plate and filament switches are interlocked through relays to the master control panel to permit central control and time-delay operation.

Line Preamplifier

The transmitter-exciter is located approximately 250 feet from the final amplifier; hence a line preamplifier is desirable in lieu of a high-power driver which could cause interference in the control room. The amplifier is a single 6146 which is pi-coupled for ease in impedance matching. It has a self-contained power supply and is located out of sight behind the main equipment.

CONCLUSIONS

Crosscorrelation radars require frequency-stable, coherent transmitter systems in which the generated rf pulse may be obtained from either a pulsed variable-frequency oscillator or a gated amplifier-crystal oscillator combination. The final amplifier in these systems is inherently less stable because of the advanced voltages required for pulse operation; hence special techniques must be employed to prevent parasitics and to neutralize the amplifier efficiently. For the most efficient amplifier, a tube should be used that has better grid and screen dissipation limits than those currently available for communications work.

[redacted]