FR-2978

UNCLASSIFIED
~~CONFIDENTIAL~~

Serial No.

UNCLASSIFIED

Navy Department - Office of Naval Research

NAVAL RESEARCH LABORATORY
Washington, D.C.

* * *

SHIP-SHORE RADIO DIVISION - RECEIVER SECTION

19 September 1946

INVESTIGATION OF THE FACTORS INVOLVED IN THE DEVELOPMENT OF A CONTINUOUSLY-VARIABLE RECEIVER (MODEL XCS-2) FOR THE 225 -400 MC FREQUENCY RANGE

By R. M. Maiden and J. K. Steckel

- Report R-2978 -

UNCLASSIFIED
~~CONFIDENTIAL~~

* * *

UNCLASSIFIED
CLASSIFICATION CHANGED TO
BY AUTHORITY OF NRL memo 3505-349/sadler
Reference Authority
ON 30 April 1957
(DATE)
Signature of Custodian

Approved by:

T. McL. Davis - Head, Receiver Section

L. A. Gebhard, Superintendent
Ship-Shore Radio Division

Commodore H. A. Schade, USN
Director, Naval Research Laboratory

Preliminary Pages..... a-d
Numbered Pages..... 18
Plates..... 7
Distribution..... d

NRL Problem S633.4R-C
NRL ltr C-S67/46(1221/RMM) C-1220-148/46
of 15 Nov. 1946 to Bu S.

UNCLASSIFIED

ABSTRACT

The preliminary research and development on a continuously-variable receiver (Model XCS-2) for the 225-400 Mc frequency range is described. The development of an i-f amplifier and calibrator for this receiver is also discussed. Recommendations for future research and development are proposed.

UNCLASSIFIED

~~CONFIDENTIAL~~

UNCLASSIFIED

TABLE OF CONTENTS

	Page
ABSTRACT	-b-
INTRODUCTION	1
GENERAL	1
HISTORY OF THE DEVELOPMENT	2
DISCUSSION OF FREQUENCY STABILITY REQUIREMENTS	4
CONTROL SYSTEMS	5
STABILITY OF L-C CIRCUITS	6
EFFECT OF TUBES ON OSCILLATOR FREQUENCY	9
MECHANICAL SYSTEM ERRORS	10
CALIBRATION ERRORS	10
RESUME OF STABILITY CONSIDERATIONS	10
IMAGE REJECTION CALCULATIONS	11
CHOICE OF VACUUM TUBES	13
CONDENSER CALCULATIONS	13
DESIGN AND DEVELOPMENT OF THE CALIBRATOR CIRCUIT	14
DESIGN AND DEVELOPMENT OF THE I-F TRANSFORMERS	15
INVESTIGATION OF OSCILLATORS	16
CONCLUSIONS	17
RECOMMENDATIONS	17
REFERENCES	18

PLATE 1 - Block Diagram of the Receiver

PLATE 2 - I-F Selectivity Characteristics

PLATE 3 - Dielectric Constant of Water-air Vapor

PLATE 4 - Typical Compensated Oscillator

PLATE 5 - Schematic Diagram of Calibrator

PLATE 6 - I-F Transformer Windings

PLATE 7 - Experimental Oscillator Circuit

CONFIDENTIAL
UNCLASSIFIED

INTRODUCTION

1. The Model XCS-2 equipment is a proposed receiver intended primarily for voice reception at frequencies between 225 and 400 Mc. A problem, S633.4R-C, was assigned to the Laboratory on 13 August 1945 to develop two equipments for use in the conduction of comparative performance tests with the Models CXHY and XCS-1 equipments. A priority of A-2 was assigned to this work. (Reference (1)). Due to the pressure of higher priority work and shortage of manpower, the problem could not be continuously activated until 27 May 1946. Prior to this date, however, detailed plans for the receiver were considered and the problem of control systems was investigated with the engineers of two manufacturers. By authority of reference 2, the problem was closed on 30 July 1946. The following is a report on the work done from 13 August 1945 to 30 July 1946.

GENERAL

2. A primary purpose of the development of this receiver was to provide receiving equipments which would not necessitate the procurement and distribution of large numbers of crystals to satisfy the demands for operating channels in the 225-400 Mc frequency range. It was known that a receiver having a continuously-variable local oscillator operating at the fundamental heterodyne frequency would have fewer spurious responses than a receiver employing a crystal oscillator and multipliers. Although a continuously-variable receiver of this type would very probably have less overall frequency stability and a wider i-f bandwidth (hence requiring greater adjacent channel separation) than crystal-controlled types, it was considered that such a receiver would prove to be more reliable in the Naval service. It is also conceivable that a continuously-variable receiver could provide effectively the same number of interference-free channels as the Models RDZ or MAR when the multitude of possible spurious responses of crystal-controlled receivers and the spurious radiatious of crystal-controlled transmitters are considered. Since the receiver would tune the range continuously, it could be operated at any nominal frequency in the 225-400 Mc range. Thus a sufficiently accurate continuously-variable receiver would be useful for communications in the 225-400 Mc range.

3. The problem details of reference (1) are summarized below:

(a) Two Model XCS-2 equipments shall be designed to provide continuous frequency coverage between the limits of 225 and 400 Mc.

(b) The completed equipments shall be suitable for operation in the same type of installation as the Model RDZ series equipments.

(c) The equipment shall provide the best possible performance from the standpoint of frequency stability, image rejection, and adjacent channel interference.

(d) While continuous frequency variation may be obtained, frequency selection shall be accomplished by an automatic tuning control in the same manner as for the RDZ series equipments. There will be no requirement for a manual

CONFIDENTIAL
UNCLASSIFIED

tuning control, except as an emergency measure in the event of failure of the automatic tuning control and for the "setting up" of channels.

(e) Temperature control of the high frequency oscillator, if required, should not exceed the demands of the crystal oven of the Model RDZ equipments for primary power consumption (30 watts).

4. The main problems in achieving the performance outlined above are as follows:

(a) The development of a stable oscillator capable of being accurately tuned and calibrated.

(b) The development of a calibrator which would provide a suitable calibration spectrum throughout the tuning range.

(c) The procurement of a suitable and accurate automatic positioning device for controlling the tuning of the receiver.

Once these objectives had been accomplished a relatively simple receiver could be produced which would not employ the large number of crystals required by the Model RDZ series equipments, nor have the complexity of receivers employing the TR1407 principle.

HISTORY OF THE DEVELOPMENT

5. Before the problem was continuously activated, conferences were held with manufacturers of positioning controls. Controls made by the Collins Radio Company and the Yardeny Engineering Company were investigated. A discussion of the control systems investigated is given in paragraph 17.

6. At the start of the development, consideration was given to several items which are outlined below:

(a) A block diagram of the proposed receiver was drawn up (Plate 1). The preselector shown includes two signal-frequency amplifier tubes of the remote-cutoff type, a mixer tube, and an oscillator tube. Two tuned-coupled circuits are shown between the antenna and the grid of the first signal-frequency amplifier tube, one single-tuned circuit couples the two signal frequency amplifier tubes, and one single-tuned circuit couples the second signal-frequency amplifier tube to the mixer. This arrangement was chosen as a result of image rejection calculations discussed in paragraph 27. The oscillator employs one single-tuned circuit. A standardized type of i-f amplifier such as used in the Models RCK, RDO, and RDZ receivers with a new set of i-f transformers is employed. Choice of intermediate frequency is discussed in paragraph 27 while determination of i-f bandwidth is discussed in paragraph 25. Five double-tuned transformers are employed in the i-f amplifier and hence a 60 to 6 db selectivity ratio of approximately 2.8 is to be expected as measured from the grid of the first i-f amplifier tube (this ratio would be more nearly 2.6 or 2.7 with the inclusion of the i-f transformer between the mixer and first i-f amplifier). The transformers are adjusted to be slightly undercoupled in order to simplify trimming and assure uniformity in manufacture. A calibrator is described in paragraph 30 which produces

UNCLASSIFIED

harmonics of either a 1 Mc crystal or a 5 Mc crystal. These harmonics are fed into the signal-frequency amplifier during calibration of the receiver. Simultaneously, harmonics of the same crystals are fed into the i-f amplifier, causing an audible beat note when the intermediate frequencies produced by the mixing of the local oscillator with the harmonics introduced into the signal-frequency amplifier approach the frequency of those harmonics fed into the i-f amplifier from the calibrator. The beats may be detected by the use of headphones or by noting deflections of the audio output meter. Thus the operator may calibrate or adjust the dial of the receiver at intervals of 1 Mc or 5 Mc. The receiver may be remotely controlled by means of an autotune unit, or equivalent, which may be set for ten predetermined positions.

(b) The signal-frequency and oscillator circuits used will be of the "lumped-constant" type. The following advantages are claimed for these circuits:

(1) The circuits can be ganged readily to a single drive shaft if variable air condensers are employed.

(2) The necessary variable condensers are readily obtainable.

(3) Much experience has been obtained in the application of this type of circuit to this frequency range.

(4) Low frequency theory is applicable to these circuits if the effects of stray inductances and capacitances are carefully considered.

(5) Noise due to sliding contacts can be eliminated by the use of split-stator condensers.

(6) The required tuning range is achievable with this type of circuit.

(7) These circuits may be built so as to occupy less space than other types of circuits for this frequency range.

(8) Methods of stabilization for lumped-constant oscillators have been rigorously developed (Reference 6).

(9) A straight-line-frequency tuning characteristic is easily obtainable.

(c) The "3-bar" split-stator type of condenser developed by the Radio Condenser Company of Camden, New Jersey in accordance with NRL recommendations will be employed. Similar condensers of the "4-bar" type have been used in the Model RDZ equipments. These condensers have a useful rotation of 240°, which permits better mechanical control of rotation than with condensers having a smaller useful angular rotation.

(d) The oscillator will operate at a lower frequency than the signal. This will provide greater oscillator stability and greater image rejection, as discussed in paragraph 27.

UNCLASSIFIED

7. Having made the decisions discussed above, the details of the tuning condensers were calculated. A quotation was requested of the Radio Condenser Company for the manufacture of these condensers. These condensers were to be made with invar plates and special low thermal-expansion coefficient ceramic rods. The Radio Condenser Company has advised the Laboratory that the necessary ceramic was not available at present and that the general field of capacitance drift with temperature would be investigated further before a quotation was made. Calculations pertaining to these condensers are presented in paragraph 29.

8. The choice of tubes for the preselector is discussed in paragraph 28.

9. Calculations were made of the overall frequency stability of the equipment. This resulted in a choice of i-f bandwidth of 0.5 Mc. These calculations are summarized in paragraph 25.

10. Calculations of image rejection are given in paragraph 26. These resulted in the choice of 30 Mc as the intermediate frequency. The advantage of operating the local oscillator below the signal frequency as a means of improving image rejection is also discussed in paragraph 27.

11. A set of i-f transformers designed to provide an overall bandwidth of 0.5 Mc and a center frequency of 30 Mc were constructed and incorporated in a Model RD standardized amplifier chassis. The design and development of the i-f amplifier is discussed in paragraph 32 and the characteristics of the amplifier are illustrated on plate 2. The curves shown do not include the selectivity of the additional i-f transformer necessary between the mixer and first i-f amplifier, which would be mounted on the preselector chassis.

12. A crystal controlled calibrator was developed. This development is described in paragraph 30. The circuit diagram of the calibrator is shown in plate 5.

13. Experiments were conducted on an oscillator in the desired frequency range to investigate procedures for stabilization. These experiments are described in paragraph 33.

14. At this point, the problem was closed and all work ceased, except for preparation of this report.

DISCUSSION OF FREQUENCY STABILITY REQUIREMENTS

15. The military communication channels in the 225-400 Mc range are allocated as follows: primary channels are spaced 400 kc apart starting at 225,000 Mc and secondary channels are located midway between the primary channels. The Model TDZ crystal-controlled transmitter which is designed for shipboard use in this range has an overall frequency stability of ± 0.01%. Considering a channel at 400 Mc, the frequency transmitted will lie in the range 400 Mc ± 40 kc. Thus, to insure reception of the transmitted signal with about 5 kc sidebands, the bandwidth of the receiver must be greater than about 90 kc. The required bandwidth of the receiver may be computed by summing the overall

~~CONFIDENTIAL~~
UNCLASSIFIED

drift of the transmitter, the overall drift of the local oscillator, the overall drift of the i-f amplifier and twice the maximum modulation frequency employed. This is done in paragraph 25. The greatest drift is associated with the continuously-variable local oscillator. This drift must be minimized if the greatest number of useful channels is to be provided.

16. Special precautions are necessary in the design and construction of continuously-variable oscillators in order to make their stabilities approach those of crystal-controlled oscillators. Some of the factors which determine the accuracy of continuously-variable oscillators are listed below:

(a) Physical dimensions of the parts used in the oscillator circuit. These are subject to change with temperature.

(b) Input and output impedances of the vacuum tube used. These are subject to change with plate and heater voltage variations and show a change with the age of the tube. These impedances are different for each tube and also change with variations of oscillator activity due to load variations and with frequency.

(c) Mechanical backlash in the oscillator and automatic tuning assembly.

(d) Changes in the dielectric constant of the water-air vapor between the air-condenser plates due to changes in temperature and relative humidity.

(e) Errors made by the operator in calibration and "setting-up" of channels.

(f) Errors in the frequencies produced by the calibrator.

Experience has shown that the most pronounced changes are due to temperature, humidity, and supply-voltage variations. Since the oscillator must tune over such a relatively wide frequency range, it was not considered feasible to employ specially built compensating capacitors and inductors. It was decided to use materials which would miminize temperature drifts, to regulate supply voltages if necessary, and to stabilize temperature insofar as possible. The use of a heater inside the oscillator compartment would also serve to reduce humidity variations. An attempt also would be made to compensate the oscillator for changes in tube impedances and external loading, as outlined in paragraph 22.

CONTROL SYSTEMS

17. In order to accurately set the frequency of the receiver for operation on any one of ten preset channels, a remote control system is required that is capable of positioning the condenser shafts to a given angular position as accurately as possible. Continuous remote control of tuning is also desirable for some applications. The Collins Radio Company (manufacturers of Autotune Units) was contacted with regard to providing a compact multiturn unit which could be preset for ten channels. This company is developing such a unit, which is expected to have a resettability of $\pm$ 0.01 degree but which is limited by its shape factor and difficulty in obtaining continuous control

UNCLASSIFIED

of rotation. The Yardeny Engineering Company has developed and demonstrated a control system which appears adequate for this application and has a stated resettability of $\pm$ 0.01 degree. It is felt that the control system made by the Yardeny Company has been improved over earlier models sufficiently to warrant consideration of it for this receiver.

STABILITY OF L C CIRCUITS

18. In the following, it is assumed that the frequency of an oscillator is determined solely by the values of L and C in the tuned circuit. This is a reasonable assumption if compensating circuit parameters are employed as suggested below (Paragraph 22). Neglecting losses in the tuned circuit, the frequency is given by:

$$f_o = \frac{1}{2\pi\sqrt{LC}} \qquad 1$$

To determine the effect of small changes in L and C on f_o, the total derivative of f_o with respect to L and C is evaluated as follows:

$$df_o = \frac{\partial f_o}{\partial L} dL + \frac{\partial f_o}{\partial C} dC \qquad 2$$

Where df_o is the change in frequency due to the changes dL and dC respectively. Evaluating the partial derivatives in equation 2,

$$\frac{\partial f_o}{\partial L} = \frac{-1}{4\pi\sqrt{LC}\,L} = \frac{-f_o}{2L}$$

$$\frac{\partial f_o}{\partial C} = \frac{-1}{4\pi\sqrt{LC}\,C} = \frac{-f_o}{2C} \qquad 3$$

Thus the total differential frequency becomes, from equations 2 and 3.

$$df_o = -\frac{f_o}{2}\left[\frac{dL}{L} + \frac{dC}{C}\right] \qquad 4$$

and the relative frequency change is

$$\frac{df_o}{f_o} = -\frac{1}{2}\left[\frac{dL}{L} + \frac{dC}{C}\right] \qquad 5$$

The percentage frequency change is $100\,\frac{df_o}{f_o}$

By substituting values for $\frac{dL}{L}$ and $\frac{dC}{C}$ into equation 5, the frequency stability may be calculated. The causes of inductance changes are the variations in dimensions of the inductor element itself and its supports, and the changes in permeability of the medium which its field encompasses. These changes of length and permeability are caused mainly by temperature and humidity variations. No information has been found on the change in permeability of air due to temperature and humidity variations but this effect probably is negligible

when compared with other changes. The formula (reference 4) for the inductance of the type of inductor used in this frequency range is very complicated and does not take into account the effect of shields. However, for practical purposes, this formula may be simplified to:

$$L = K\ell \qquad 6$$

where L is the inductance,
K is a proportionality constant,
ℓ is the physical length of the inductor.

Thus the change in inductance due to a change in length is given by:

$$dL = K\,d\ell \qquad 7$$

and the quantity $\frac{dL}{L}$ which is required for equation 5 above is given by:

$$\frac{dL}{L} = \frac{K\,d\ell}{K\ell} = \frac{d\ell}{\ell} \qquad 8$$

The quantity $\frac{d\ell}{\ell}$ is equal to the coefficient of linear expansion per unit temperature change of the material used to make the inductor.

19. The causes of air-capacitance changes are the variations in dimensions of the capacitor due to temperature changes, and the change in the dielectric constant of the water-air vapor between the plates due to changes in temperature and relative humidity. The capacitance of the condenser may be approximately expressed by:

$$C = \frac{n \epsilon A}{4\pi t} \qquad 9$$

where A = The effective area of the plates.
t = The thickness of the dielectric.
ϵ = The dielectric constant.
n = The number of dielectric spaces between adjacent rotor and stator plates.

(This formula neglects edge effects). Considering variations of dimehsions only, it is seen that the capacity may be expressed as follows:

$$C = m s \qquad 10$$

where s is a factor which takes into account the term $\frac{A}{t}$ in equation 9 and m is a constant of proportionality. Differentiating equation 10,

$$dC = m\,ds$$

and

$$\frac{dC}{C} = \frac{m\,ds}{m s} = \frac{ds}{s} \qquad 11$$

UNCLASSIFIED

CONFIDENTIAL
UNCLASSIFIED

Thus the relative capacitance change per unit temperature change is equal to the coefficient of linear expansion per unit temperature change of the material from which the condenser is made. Equation 5 may now be rewritten as

$$\frac{df_o}{f_o} = -\frac{1}{2}\left[\frac{d\ell}{\ell} + \frac{ds}{s}\right] \qquad 12$$

and if the condenser and the inductor are made of the same material,

$$\frac{d\ell}{\ell} = \frac{ds}{s}$$

and equation 12 becomes

$$\frac{df_o}{f_o} = -\frac{d\ell}{\ell} \qquad 13$$

20. Equation 13 expresses the fact that the relative frequency change per degree Centigrade due to changes in dimensions caused by temperature variations of a tuned circuit of the type considered is given by the coefficient of linear expansion per degree Centigrade of the material from which the circuit is made. In order to achieve optimum stability, a material having a small expansion coefficient should be used. The values of this coefficient for brass and invar are given below:

Material	$\frac{d\ell}{\ell}$ per degree Centigrade
Brass (66 Cu - 34 Zn)	18.9×10^{-6} (0-100 °C)
Invar (36% Nickel)	0.9×10^{-6} (20°C)

(The above values were taken from reference 8).

Considering a temperature variation from -20°C to 80°C (a net change of 100°C), the net frequency changes at 375 Mc for a brass circuit should be:

$$df_o = -18.9 \times 10^{-6} \times 375 \times 10^6 \times 100$$
$$= -710{,}000 \text{ cycles or } -710 \text{ kc}$$

and for an invar circuit:

$$df_o = -0.9 \times 10^{-6} \times 375 \times 106 \times 100$$
$$= -33{,}800 \text{ cycles or } -33.8 \text{ kc}$$

It is seen that the use of invar should contribute substantially to the stability of the tuned circuits.

21. The effect of temperature and humidity changes on the dielectric constant of the water-air vapor between the condenser plates was calculated using the

CONFIDENTIAL
UNCLASSIFIED

following formula obtained from wave propagation sources:

$$\epsilon = 1 + 2\left[\frac{79P}{T} - \frac{11E}{T} + \frac{3.8\times10^5 E}{T}\right] \qquad 14$$

where ϵ = dielectric constant
P = barometric pressure in millibars
E = partial pressure of water vapor in millibars
T = absolute temperature

Meteorological data on water-air vapor was obtained from the Smithsonian Meteorological Table (Reference 5) and was modified for substitution in the above formula. The results of this calculation are shown graphically in Plate 3. Assuming that the dimensions of the condenser remain fixed, equation A may be written

$$C = j\epsilon \qquad 15$$

where ϵ = dielectric constant,
j = a proportionality constant.

Differentiating,

$$dC = j\,d\epsilon$$

$$\frac{dC}{C} = \frac{j\,d\epsilon}{j\epsilon} = \frac{d\epsilon}{\epsilon} \qquad 16$$

A change $d\epsilon$ of approximately 500 parts per million takes place over the temperature range -20°C to +40°C and the humidity range 10% to 97%. Since ϵ is approximately equal to unity,

$$\frac{d\epsilon}{\epsilon} = \frac{dC}{C} = 500 \times 10^{-6} \qquad 17$$

Substituting into equation 5, remembering that for this case $dL = 0$,

$$df_0 = -\frac{500 \times 10^{-6} \times 375 \times 10^6}{2} = -94{,}000 \text{ cycles}$$

or -94 kc

It is seen that this drift is greater than the drift due to changes in dimensions if an invar circuit structure is used.

EFFECT OF TUBES ON OSCILLATOR FREQUENCY

22. The tube used produces variations in the frequency of the oscillator caused by changes in the plate and heater voltages. There are also secondary effects due to changes in mixer loading on the oscillator. These changes cause variations in the amplitude of the oscillations, and hence changes in the equivalent plate and grid resistances and capacitances of the tube which usually form a part

UNCLASSIFIED

CONFIDENTIAL
UNCLASSIFIED

part of the frequency determining circuit. Llewellyn, reference 6, shows how an oscillator may be compensated so that variations of plate and grid resistances have little effect on the frequency of the oscillations. Stabilization by these means involves the compensation of a Colpitts-type oscillator. Plate 4 shows a typical compensated oscillator of that type. It is seen that a tap on the rotor of the condenser is required. This would require a special double split-stator condenser, if contact noise is to be eliminated. L' is the compensating inductor and is independent of frequency if C_1/C_2 remains constant. It is along these lines that compensation is planned, as other types of stabilization are effective only at a fixed frequency. It is emphasized that while the effects of plate and heater voltages may be reduced by the use of voltage-regulator tubes and barreters, these devices do not prevent changes in tube impedances due to variations of mixer loading. It therefore seems desirable to compensate the oscillator by the method described above whether the plate and heater voltages are regulated or not.

MECHANICAL SYSTEM ERRORS

23. Considering the oscillator as operating 30 Mc below the signal frequency, its tuning range (allowing 1% overlap at both ends of the signal frequency range) is from 192.75 Mc to 374.0 Mc. This is a frequency range of 181.25 Mc. If a straight- line-frequency condenser having 240° of useful rotation is employed, the frequency-rotation correspondence ratio is 0.757 Mc per degree of rotation. The Collins Autotune used in the Model RDZ equipment is guaranteed to be resettable to within ± 0.1°. Thus, if this tuning mechanism is used, the oscillator could be reset to ± 75.7 kc. Another remote-control device made by the Yardeny Company is claimed to be resettable to ± 0.01°. Using this device, the resettability could be as little as ± 7.57 kc in frequency.

CALIBRATION ERRORS

24. The harmonics of the calibration oscillator can be expected to be accurate to ± 0.01% if the crystals are not temperature-controlled. This corresponds to an accuracy of ± 40 kc at 400 Mc.

RESUME OF STABILITY CONSIDERATIONS

25. The total drifts and errors of the overall communications system are presented below. The data given assumes an operating frequency of 400 Mc, that the oscillator is 30 Mc below the signal frequency, that the temperature of the local oscillator circuits change from -20 to +80°C, that the relative humidity in the local oscillator compartment changes from 10% to 97%, that the oscillator circuit is constructed of invar and that a TDZ transmitter is used.

All drifts are given for one direction (negative).

CAUSE	PERCENT CHANGE IN FREQUENCY	ACTUAL CHANGE IN FREQUENCY AS COMPUTED AT 400 Mc
Invar Tuned Circuit Drift due to thermal dimensional changes.	0.0092%	-33.8 kc
Drift due to changing dielectric constant of the water-air vapor in the oscillator compartment.	0.0254%	-94.0 kc
Mechanical Control Resettability (if Yardeny Control Unit is employed).	0.0019%	-7.57 kc
Calibration Oscillator error.	0.01%	40. kc
Transmitter drift.	0.01%	40.0 kc
Allowance for Side-bands.		5.0 kc
Total Error.	.055%	220.37 kc

The above calculations show that an i-f bandwidth of approximately 400 Kc is reasonable, if no temperature and humidity stabilizations are employed. It was decided to construct an i-f amplifier for experimental work having a 3 db bandwidth of 0.5 Mc to allow for other drifts not considered above, such as backlash in shaft coupling devices, etc.

IMAGE REJECTION CALCULATIONS

26. The image rejection of the preselector circuits was computed using the following formulae:

For single tuned circuits

$$\alpha^2 = 1 + Q^2 Y^2$$

For two tuned-coupled circuits

$$\alpha^2 = 1 + Q^4 Y^4 \qquad (18)$$

where

α is the relative attenuation at the image frequency,
Q is the signal frequency divided by the 3 db bandwidth of the tuned circuit considered,
Y is the selectivity factor $= \frac{f}{f_0} - \frac{f_0}{f}$
f is the image frequency,
f_0 is the signal frequency.

UNCLASSIFIED

UNCLASSIFIED

UNCLASSIFIED

The formula given for two tuned coupled circuits is for the case where the circuits have equal Q's and the coupling between them is "critical" (Reference 7). To simplify alignment of these circuits and prevent difficulties during manufacture, the coupling between them should be approximately 80% of critical coupling.

27. The following is a tabulation of image attenuations in db computed for a signal frequency of 400 Mc using the above formulae:

(a) For the oscillator above the signal frequency.

Intermediate Frequency	20 Mc		30 Mc	
Q	50	75	50	75
Image attenuation of one single tuned circuit.	19.6 db	23.1 db	33.9 db	36.5 db
Image attenuation of two tuned-coupled circuits.	33.1 db	40.1 db	39.8 db	46.8 db
Image attenuation of overall preselector; two single tuned circuits plus two tuned-coupled circuits (four tuned circuits in all).	72.3 db	86.3 db	85.5 db	99.8 db

(b) For the oscillator below the signal frequency:

Intermediate Frequency	20 Mc		30 Mc	
Q	50	75	50	75
Image attenuation of one single-tuned circuit.	20.4 db	24.0 db	24.2 db	27.8 db
Image attenuation of two tuned-coupled circuits.	34.8 db	41.9 db	42.4 db	49.4 db
Image attenuation of overall preselector; two single tuned circuits plus two tuned-coupled circuits (four tuned circuits in all).	75.6 db	89.9 db	90.8 db	105.0 db

The following conclusions were drawn from the above calculations:

(a) Operation of the local oscillator at a frequency lower than the signal frequency will provide greater image attenuation than if the oscillator is operated at a higher frequency than the signal.

(b) The use of a 30 Mc intermediate frequency will provide approximately 15 db greater image rejection than if a 20 Mc if were used.

CONFIDENTIAL
UNCLASSIFIED

(c) A minimum image attenuation of 90 db is expected for the receiver if the oscillator is operated 30 Mc below the signal frequency.

CHOICE OF VACUUM TUBES

28. The following vacuum tubes were tentatively chosen for this receiver:

(a) Oscillator tube - 6F4

(b) Mixer tube - 6AK5 or A4485

(c) Signal-frequency amplifier tubes - A4466 or A4444

Final choice of tube types will be dependent on the performance of the tubes in experimental models. The 6F4 was chosen for the oscillator circuit because it appeared to give the best performance in the experiments described in paragraph 33. The A4485 is a sharp cut off single-ended pentode (gm = about 9000) which was developed for use in the Model XCS-2 receiver. The A4466 is a remote-cut-off double-ended acorn pentode, while the A4444 is a remote-cut-off double-ended miniature pentode. These tubes (gm = 6000) were also developed for use in the Model XCS-1 equipment. The use of remote-cut-off tubes in the preselector serves to minimize the effects of cross modulation and overload and the use of double-ended tubes serves to minimize grid-plate capacitance in the tube and allows better compartmentation, thereby reducing oscillator radiation. Samples of the types A4485, A4466 and A4444 have been submitted to the Vacuum Tube Development Section of the Laboratory for measurements of input admittance, output admittance and forward admittance.

CONDENSER CALCULATIONS

29. Specifications for the tunning condensers were calculated as follows:

(a) For the oscillator circuit:

The oscillator must tune from 192.75 Mc to 374 Mc. This is a tuning range of 1.94 to 1. For a type 6F4 tube, $C_{gp} = 1.9$ μμf, $C_{gk} = 2.0$ μμf and $C_{pk} = 0.6$ μμf. Thus the equivalent tube capacity presented to the tank circuit becomes; $1.9 + \frac{2 \times 0.6}{2.6} = 2.5$ μμf. The minimum capacity of the circuit is estimated to include the following.

Equivalent tube capacity	- 2.5 uuf
Trimmer Capacity (mid range)	- 3.0 uuf
Minimum Capacity of the tuning condenser	- 5.0 uuf
Stray capacities	- 2.0 uuf
Effective Minimum Capacity	- 12.5 uuf

CONFIDENTIAL
UNCLASSIFIED

Thus the maximum oscillator capacitance should be 12.5 X $(1.94)^2$ = 47.1 uuf. This corresponds to a Δ C of 47.1 - 12.5 = 34.6 uuf.
The condenser must therefore provide from 5 to 39.6 uuf in such a fashion as to produce a straight-line-frequency tuning capacitance with a total minimum capacitance of 12.5 uuf.

(b) For the radio-frequency circuits:

The mixer grid circuit will probably have the greatest minimum capacity. Therefore, calculations are made for this circuit and the other signal frequency circuits will be adjusted to have the same minimum capacity as the mixer grid circuit by means of the trimmer capacitors. These signal frequency circuits must tune from 222.75 to 404 Mc if a 1% overlap is allowed at each end of the tuning range. This is a tuning range of 1.81 to 1. The minimum capacity is estimated to include the following:

Input capacity of the mixer tube	-	4.0 uuf
Output capacity of the second signal frequency amplifier	-	2.8 uuf
Trimmer Capacity (mid range)	-	3.0 uuf
Stray capacity	-	2.0 uuf
Minimum capacity of the tuning condenser	-	5.0 uuf
Effective minimum capacity	-	16.8 uuf

The maximum signal circuit tuning capacitance should be 16.8 X $(1.81)^2$ = 55.1 uuf.
This corresponds to a Δ C of 55.1 -16.8 = 38.3 uuf. The condenser must therefore provide from 5 to 43.3 uuf in such a fashion as to produce a straight-line-frequency characteristic with a total minimum capacity of 16.8 uuf.

DESIGN AND DEVELOPMENT OF THE CALIBRATOR CIRCUIT

30. In order to set up the frequency of the local oscillator for operation on particular channels in the 225-400 megacycle range, an accurate calibration system is required. The system described below involves the generation of stable known check frequencies and tuning of the receiver to these check signals. The number of calibration points required depends on the stability of the local oscillator and the linearity of its tuning characteristic, and the channelization. It appears that the oscillator drift can be kept to less than ± 0.25 Mc and that the tuning characteristic can be made essentially straight-line-frequency between any two frequencies spaced one megacycle apart. Thus if harmonics of a crystal oscillator spaced at 5 Mc intervals are provided, the oscillator frequency dial may be calibrated at points 5 Mc apart. In order to calibrate at frequencies between these 5 Mc points, harmonics spaced one

CONFIDENTIAL
UNCLASSIFIED

Mc apart would be provided. To adjust the oscillator to frequencies between these one megacycle points requires interpolation involving a micrometer dial control of the oscillator. Using such a scheme, the oscillator may be calibrated at frequencies spaced one megacycle apart and be adjusted to frequencies between these calibration points by an interpolation process.

31. The circuit developed to generate these harmonics is shown in Plate 5. It consists of a crystal-controlled oscillator, V1, driving two distorting amplifiers, V2A and V2B, in cascade. The harmonic output is available at the plate of V2B. Two crystals are employed, one operating at a frequency of 5 Mc and the other operating at a frequency of 1 Mc. The crystals are used one at a time and are switched in and out of the oscillating circuit. The 5 Mc crystal is used to reestablish the dial calibration if a severe change in local oscillator frequency has taken place, while the one Mc crystal is used for routine calibration. The crystals are connected in a Pierce type oscillator circuit, and the oscillator output is "electron-coupled" to the distorting amplifiers. These distorting amplifiers consist of both sections of a Type 6J6 tube acting as grid-leak biased, resistance-capacitance coupled amplifiers. The distorted output is rich in harmonics. Using this circuit, the two-hundredth to the four-hundredth harmonics of a one Mc crystal were audible on a Model EP-132 receiver. It is planned to connect the output of the harmonic generator to the signal frequency amplifier, similtaneously grounding the antenna to prevent radiation, and to couple some of the harmonic energy to the intermediate frequency amplifier. An audible beat-note will be heard in the output of the receiver when a harmonic of the crystal-controlled oscillator is tuned-in by the signal circuits. It is to be noted that only one crystal is used at a time during the calibration process and hence the percentage accuracy of the calibrator is the same as the percentage accuracy of the crystal employed. When the development of the calibrator had reached this point, further work on it was postponed until the receiver in which it would be incorporated was developed.

DESIGN AND DEVELOPMENT OF THE I-F TRANSFORMERS

32. A set of five i-f transformers were made for use in the standardized i-f system to provide an amplifier with a center frequency of 30 Mc, having a 6 db bandwidth of 500 Kc and a voltage amplification of 100,000 times. Since five tubes are employed, a stage gain of 10 times is required. The tubes employed, Type 6AB7, have a nominal transconductance of 5000 micromhos. Thus critically-coupled transformers having equal primary and secondary impedances of 4000 ohms will give the required stage gain. The coupling of the transformers, however, is to be purposely made about 80% of critical coupling to insure ease of alignment and to allow for production variations of coupling. The loss in amplification due to this amount of under-coupling is approximately 7% per stage. Hence the resonant impedance of the transformer tank circuits is made approximately 4300 ohms. To produce the required overall bandwidth, a Q of 53 and a primary and secondary tank capacity of approximately 65 uuf is required. The primary and secondary inductors required to tune the tank capacity had an unloaded Q of approximately 100. Thus a resonant impedance of approximately 7500 ohms (resistive) is contributed by the coils. To make the primary impedance 4300 ohms, a resistor having a value of approximately 8200 ohms must

CONFIDENTIAL
UNCLASSIFIED

shunt the primary tuned circuit. The input resistance of a Type 6AB7 tube at 30 Mc is approximately 9000 ohms. Thus if no damping resistors are added in shunt with the secondary, the resistance added to the primary must be less than the calculated value. A resistance of 6800 ohms connected across the primary circuits produced the desired bandwidth. A 6800 ohm resistor was also added across the secondary of the last i-f transformer since the loading due to the second detector is approximately 70,000 ohms. Plate 6 is a sketch of the transformer windings and Plate 2 shows the overall selectivity characteristics of the i-f amplifier. To obtain these characteristics, a Ferris Microvolter, Model 18D, was connected to the input terminals of the amplifier. Output was observed on a Ballantine Voltmeter, shunted with a 600 ohm resistor, which was connected to the audio output jack of the standardized IF-AF chassis used. The signal was modulated 30% at 1000 cycles per second. At full gain, a signal of 12 microvolts was required to produce standard output (6 milliwatts into 600 ohms) the amplifier was aligned at 30.0 Mc with the gain reduced approximately 40 db. It is seen that the shift in center frequency with 60 db gain control variation is approximately 125 Kc. The overall characteristic shows the presence of some regeneration at full gain. Further work on this amplifier is necessary to minimize center shift with gain change and to overcome regeneration. It is recommended that a second version of this amplifier, if further development should be carried on, use symmetrical loading of both primary and secondary circuits, i.e., equal shunt resistors of 8200 ohms across both windings, or an 8200 ohm shunt on the primary and an equivalent series resistor (about 35 ohms) between the secondary and the grid of the amplifier tube. The latter arrangement, used in the Model RDO equipment, assists in reducing center-frequency shift with change of gain. The shunt loading afforded by the amplifier tube varies with gain and cannot be depended on to furnish satisfactory loading effects.

INVESTIGATION OF OSCILLATORS

33. The characteristics of two oscillator circuits were investigated over the frequency range from 220 to 375 Mc. The first employed a Type 6J6 dual triode, as shown in Plate 7. It was found that this oscillator would not operate at the frequency of the tank circuit over this entire range. It would operate normally over only the high frequency half of this range, and would jump to a higher frequency when tuned toward the low frequency end of the range. The higher frequency oscillation is probably due to resonance of the tube capacities with the lead inductances involved. It does not appear feasible to use this tube as an oscillator in this equipment.

34. Experiments were also conducted using a Type 6F4 tube in a similar circuit. This tube was made to oscillate satisfactorily over the frequency range from 220 to 375 Mc. A small inductance (Lo in Plate 7) was necessary to prevent the oscillator from jumping to a high frequency mode of operation when it was tuned to the low frequency end of its range. This inductance consisted of approximately one-half inch of number 18 wire, connected as shown in Plate 7. Attempts at stabilization and measurement of frequency stability were not made due to closing out of the subject problem.

UNCLASSIFIED

UNCLASSIFIED

CONCLUSIONS

35. It is concluded that:

Further intensive work is necessary to complete the development of receiving equipment employing continuously variable local oscillators in the 225 to 400 Mc frequency range, with particular emphasis on the following points:

(a) Stabilization of the L-C oscillators involved.

(b) Development of additional components and tubes suitable for application in this frequency range.

(c) Improvement of the characteristics of the intermediate-frequency amplifier to minimize center shift and eliminate regeneration.

RECOMMENDATIONS

36. In order to achieve the performance specified in reference 1 in the manner described in this report, it is recommended that research and development programs be continued on the following topics:

(a) Stabilization of L-C oscillators.

(b) Improvement of existing components, such as variable condensers, inductors, resistors, fixed condensers, tubes, etc., to make them more suitable for application in this frequency range.

(c) Improvement of the performance of intermediate-frequency amplifiers from the point of view of minimizing center frequency shift with gain variation and elimination of regeneration.

CONFIDENTIAL
UNCLASSIFIED

UNCLASSIFIED

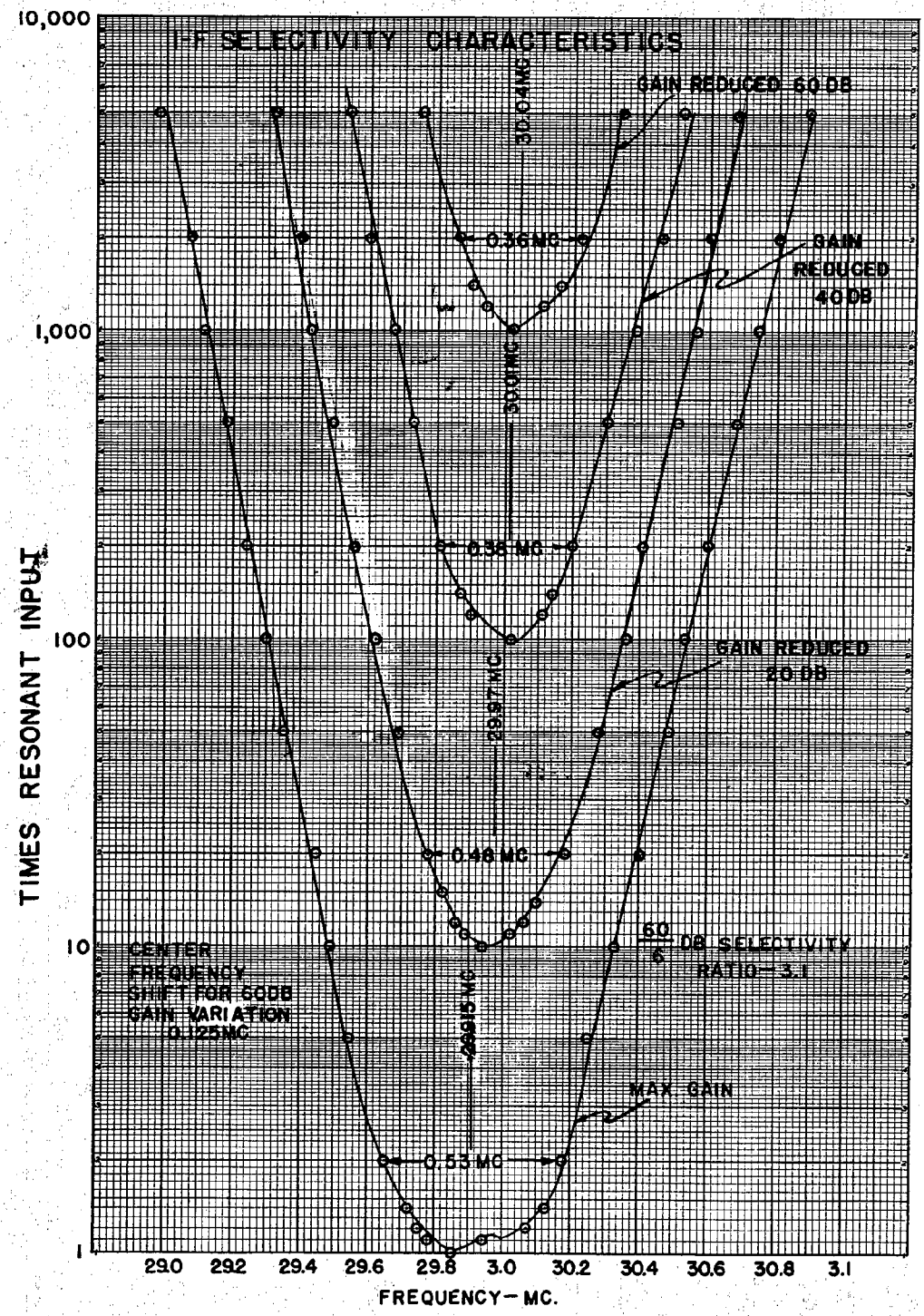

UNCLASSIFIED

CONFIDENTIAL
UNCLASSIFIED

R-2978

PLATE 3

UNCLASSIFIED

UNCLASSIFIED
CONFIDENTIAL

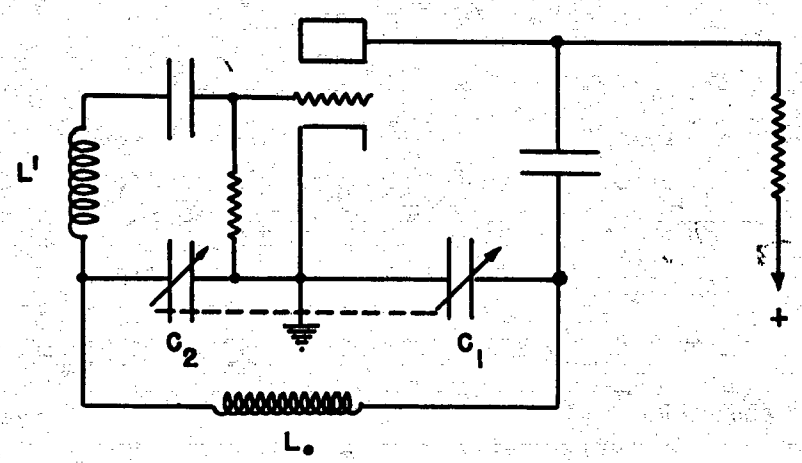

$$L' = L_o \frac{C_1}{C_2}$$

TYPICAL COMPENSATED OSCILLATOR

UNCLASSIFIED

CONFIDENTIAL
UNCLASSIFIED

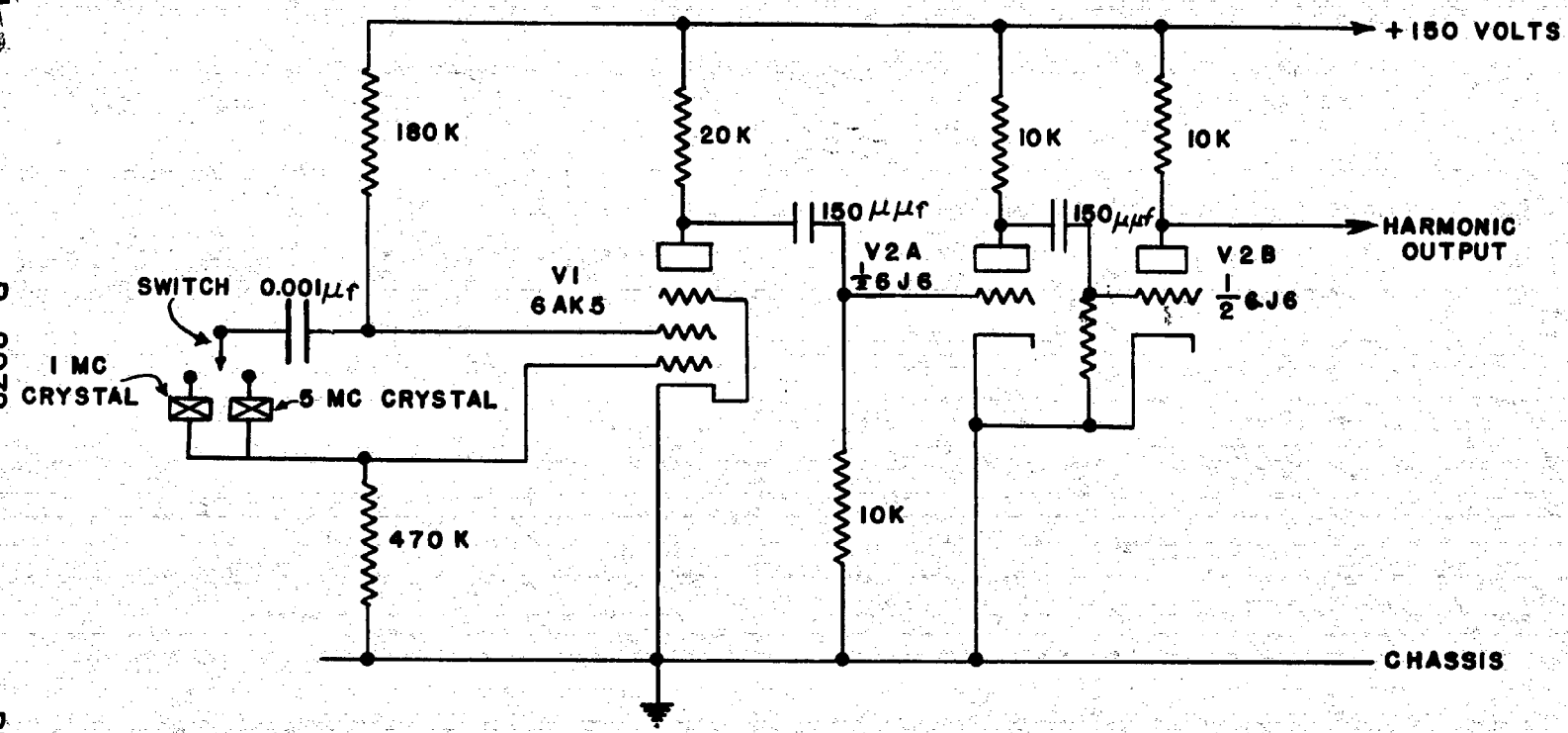

SCHEMATIC DIAGRAM OF CALIBRATOR

R-2978

PLATE 5

UNCLASSIFIED

CONFIDENTIAL
UNCLASSIFIED

R-2978

PLATE 6

NOTES

COILS WOUND ON RCA POLY-STYRENE I-F TRANSFORMER FORMS, THREADED 36 TH'DS PER INCH, 0.036" DEEP.

NUMBER 26 ENAMELED WIRE IS USED FOR THE WINDINGS.

MUTUAL WINDINGS SPACED 5 TH'DS APART.

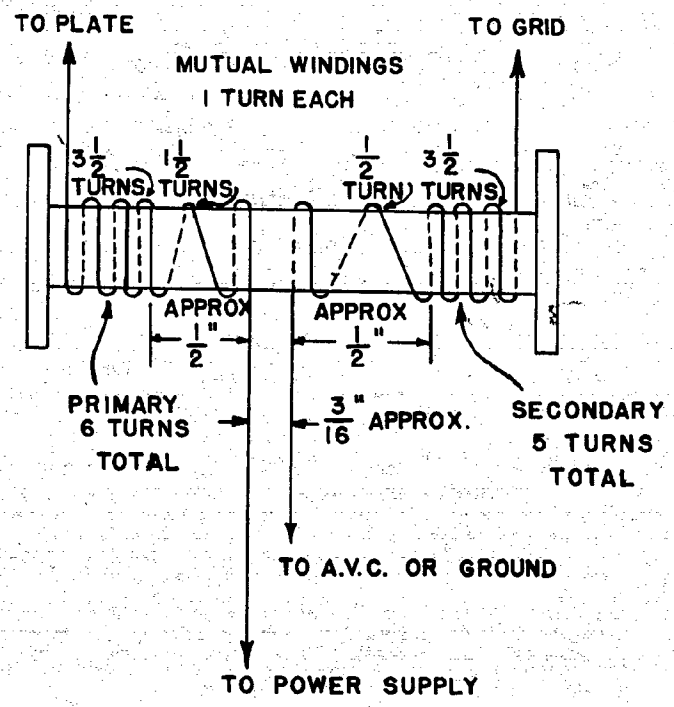

I-F TRANSFORMER WINDINGS

UNCLASSIFIED

CONFIDENTIAL
UNCLASSIFIED

EXPERIMENTAL OSCILLATOR CIRCUIT

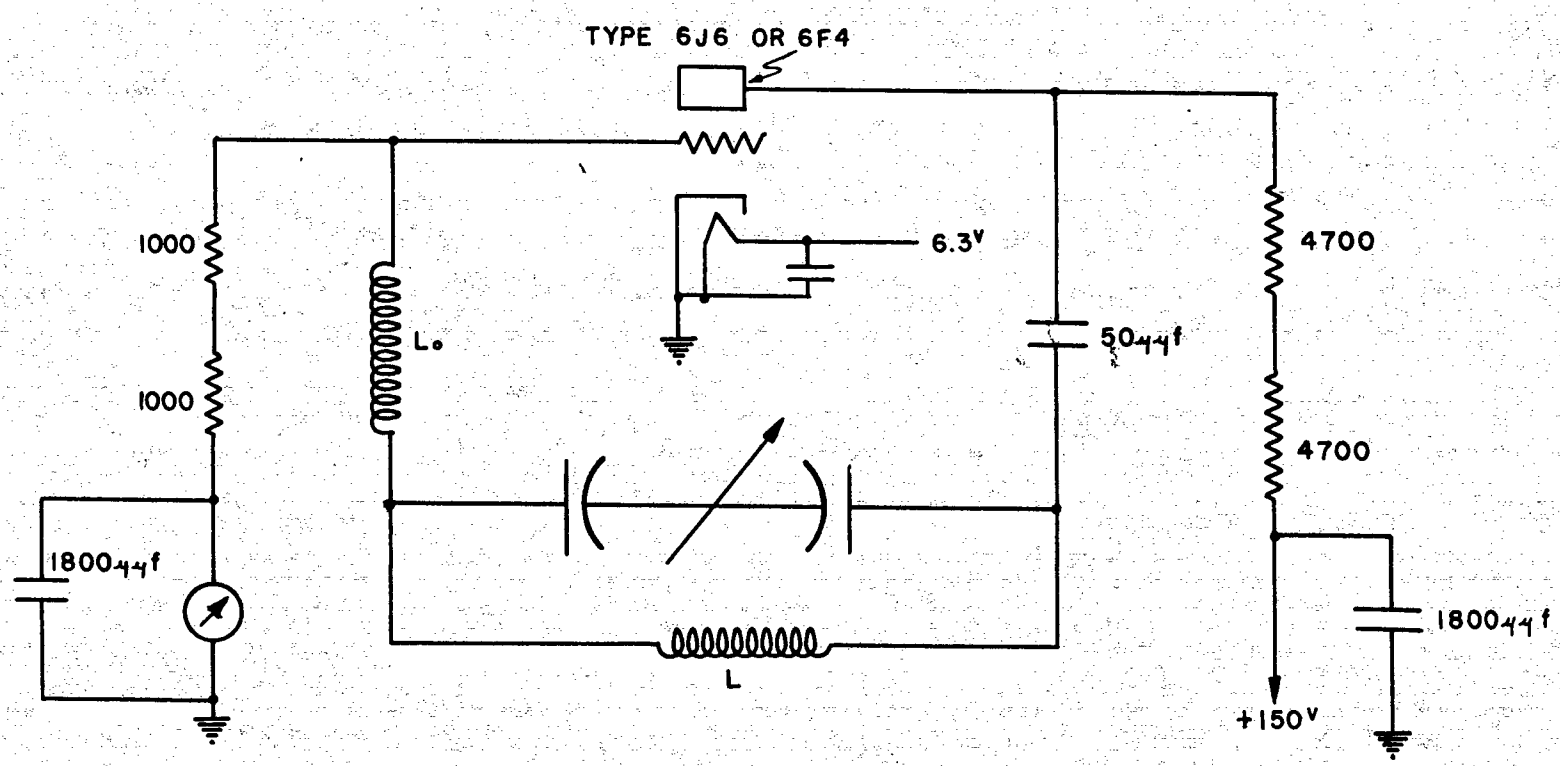

R-2978

PLATE 7

UNCLASSIFIED

UNCLASSIFIED

REFERENCES

1. BuShips ltr. to NRL Serial 2065(9250) dated 13 August 1945.
2. BuShips ltr. to NRL Serial 2533(9250) dated 30 July 1946.
3. Radio Condenser Company ltr. to NRL dated July 29, 1946.
4. Radio Engineers Handbook, F. E. Terman, New York 1943, page 51.
5. Smithsonian Meteorological Tables, Jan. 1931.
6. Proc. of the IRE, Vol 19 page 2063ff Dec. 1931.
7. Radiotron Designers Handbook, June 1941, page 123.
8. Handbook of Chemistry and Physics, 22nd. Edition, pages 1267 - 1270.

Original Data Recorded in NRL Note Books
Nos. 4722 and 2523

CONFIDENTIAL
UNCLASSIFIED

UNCLASSIFIED

BLOCK DIAGRAM OF PROPOSED PRESELECTOR

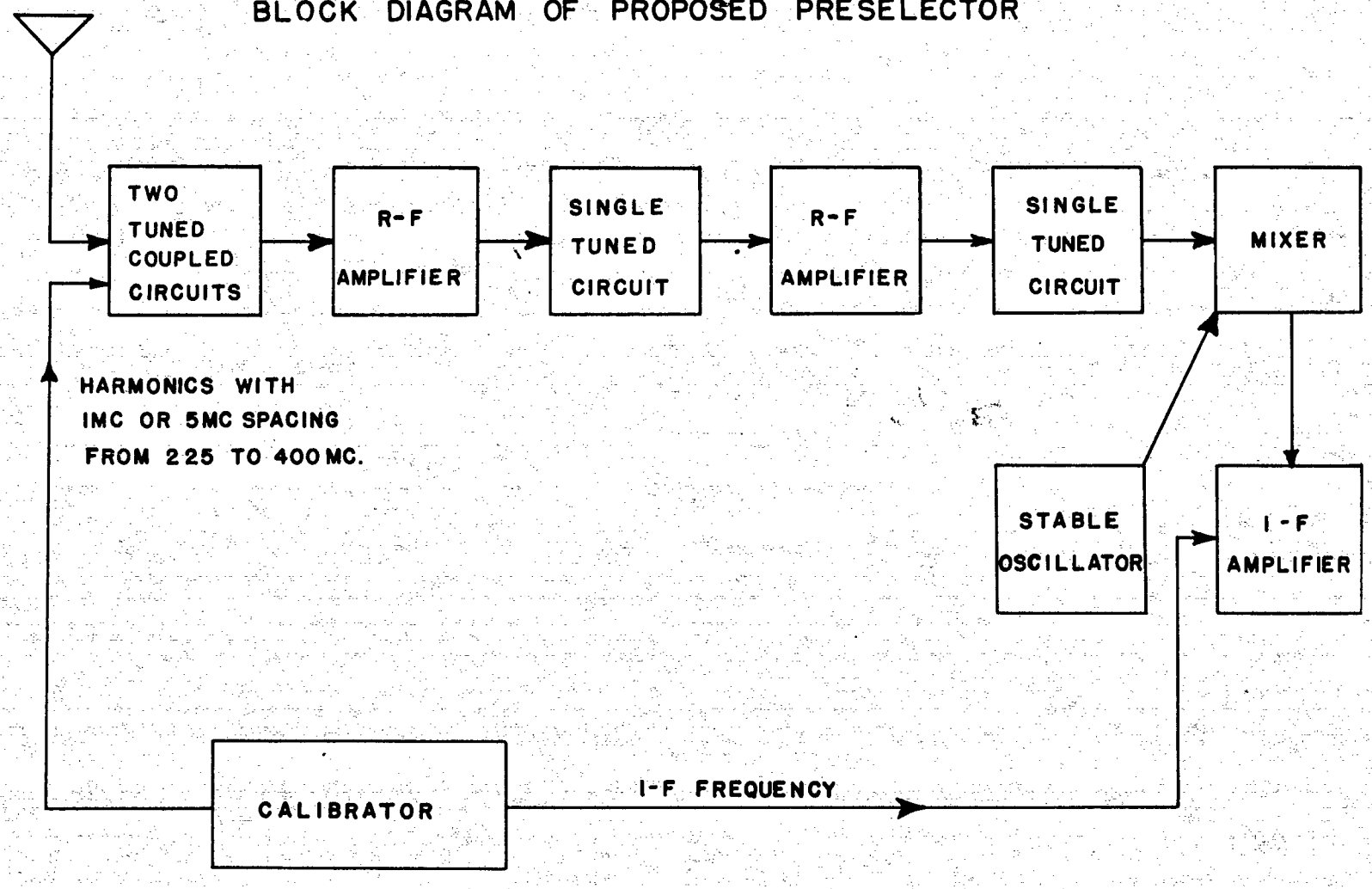

R-2978

PLATE I

UNCLASSIFIED