5340

NRL Report 6099

UNCLASSIFIED

Polarization Techniques and Components for Radar and Communication Systems

P. J. Allen and R. D. Tompkins

Tracking Branch
Radar Division

July 30, 1964

U.S. NAVAL RESEARCH LABORATORY
Washington, D.C.

Polarization Techniques and Components for Radar and Communication Systems

P. J. Allen and R. D. Tompkins

Tracking Branch
Radar Division

The frequency with which nonoptimum polarization conditions arise in radar and communication systems indicates the need for broader application of polarization diversity. Its slow adoption is attributed in part to the confused impressions which arise out of attempts to analyze polarization phenomena on a conceptual basis. This handicap practically disappears, however, when one adopts the concept that any polarized wave is comprised only of circularly polarized (CP) components. On this basis, simple graphic analysis can be used to explain, for example, how a bicircularly polarized antenna is used to achieve functional control of polarization in a diversity application. Antenna axial ratio and sense are determined by the relative amplitudes of the two oppositely sensed CP components, while wave orientation is determined by their relative phase. Such polarization control might also be used either to optimize antenna response to a desired signal, or to minimize response to an undesired signal of different polarization. When necessary, the polarization of an incident wave can be determined or displayed using an instantaneous polarimeter or a component resolver. Applications of polarization techniques have been developed into a powerful method of evaluating axial ratio characteristics of antennas. A novel continuous phase shifter has been developed which illustrates the use of circular polarization to achieve efficient frequency translation. X-band components are used as examples.

INTRODUCTION

The observation of polarized radiation predates the work of Maxwell by almost two hundred years, and the analytical and experimental study of polarization has been an integral part of the work done in the field of electromagnetic radiation since Maxwell's time. However, it has only been in the last two decades that designers of radar and communication systems have begun to appreciate the benefits which can be derived through the use of polarization as an active system parameter (1-4). This concept, which has been termed polarization diversity, has many current or proposed applications in radar systems used for air traffic control (5,6), meteorological studies (5-9), missile guidance (10,11), and target identification (12-14). In the area of communications the applications are equally numerous. For instance, communication with space vehicles might be enhanced through polarization techniques (15-17); the determination of polarized emission from cosmic sources can provide useful information in astrophysical studies (18-20); transmission of information can be achieved through polarization modulation (21-23); and a more complete definition of signal characteristics can be obtained to aid in signal reconnaisance. In addition, polarization techniques have an interesting application to frequency translators (24). This listing is obviously not all-inclusive, nor was it meant to be. However, it indicates the many areas to which polarization diversity can and, in some cases, must be applied.

The very nature of ordinary communication and radar systems demands the generation and transmission of highly coherent electromagnetic energy. Because of this, the wave, when radiated from an antenna, is completely polarized, the state of the polarization being dependent on the antenna configuration. There is, of course, an enormous variety of antenna types, but the great majority have only one port and are capable of exciting or accepting only a single polarization. It is the purpose of this report to describe techniques and components for the generation and reception of any desired state of polarization, and to indicate how they may be used in some of the above-mentioned applications. Although all of the components to be described have been designed for use at X-band, many have been scaled to other bands, and the concepts have been applied from 400 Mc through K-band.

*NRL Problems R02-14, R02-31; Projects RF 001-02-41-4005 and RMWC-21-026/652-1/F009-04-01. This is an interim report; work on the problems is continuing. Manuscript submitted March 31, 1964. NOTE:This paper was presented at the 1963 Northeast Electronics Research and Engineering Meeting, Nov. 1963, at Boston, Mass.

POLARIZATION CONCEPTS AND TERMINOLOGY

In discussions on polarization concepts, it is extremely helpful to think of a polarized wave in terms of its circularly polarized (CP) components, that is, to consider an arbitrarily polarized wave in terms of the phase and amplitude relationships of its circular components rather than its linear components. The logic behind this is associated with the accepted terms defining the state of polarization, namely, axial ratio, orientation or tilt angle, and sense. Using circular components, the axial ratio and sense are expressed as a function of the amplitude relationship between two components, according to the relation

$$\text{Axial ratio} = \frac{E_L + E_R}{E_L - E_R},$$

where E_L and E_R are, respectively, the amplitudes of the left and right CP components. The sense of the wave is determined by whichever is the larger. The relative orientation angle is solely a function of the phase relationship between the CP components. A phase change of θ will result in a change in orientation angle of $\theta/2$. It is this independence of control over axial ratio and orientation which is the primary feature of the CP-component approach.

It is possible to synthesize or analyze polarized waves using circularly polarized components in the manner shown in Fig. 1. It can be seen that a linear wave may be resolved into two equal-amplitude CP components of opposite sense. As the phase is varied between the two components the tilt angle changes. In this case the phase of one component is advanced by an amount θ, while the other is retarded by the same amount. This differential phase shift of 2θ results in an angular change in orientation of θ. With the phase held constant, an amplitude change in either component results in a change in axial ratio. When the relative amplitudes are reversed, the polarization changes only in sense, not in orientation angle or axial ratio.

A useful visual aid in the formulation of polarization concepts is the Poincaré polarization sphere (12,25), a model of which is shown in Fig. 2. The sphere permits the plotting of all polarizations on a single surface and avoids the ambiguities and infinities required by planar plotting techniques. In this type of representation, angle of longitude corresponds to the phase difference between CP components, thus indicating tilt angle, while angle of latitude represents axial ratio according to the relation

$$\text{Latitude} = 2 \text{ arc tan} \left(\frac{1}{\text{axial ratio}}\right).$$

The sphere has utility in the graphical solution of problems relating to antenna response as a function of polarization variation and transformation, as well as serving as a visual aid.

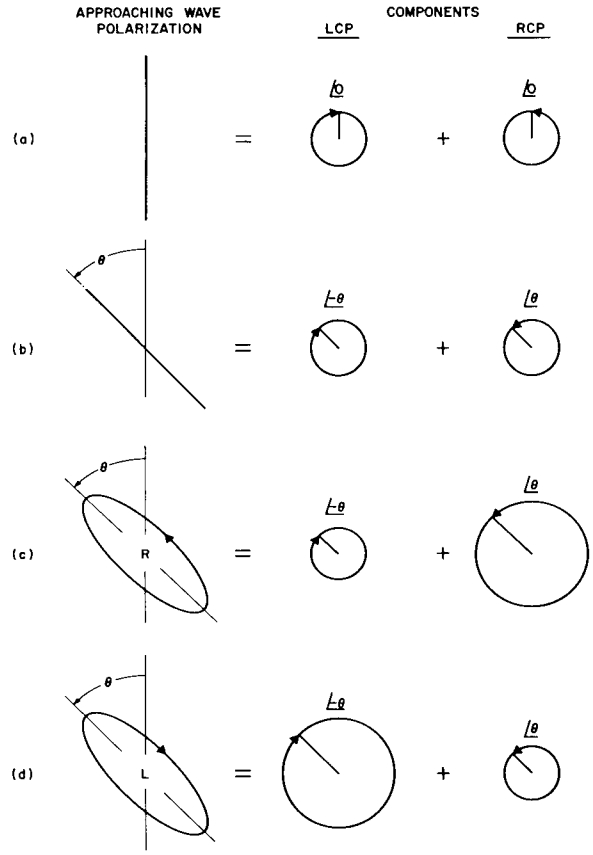

Fig. 1 — Polarization analysis using circular components. (a) Linear vertical polarization is shown equivalent to oppositely sensed circular components of equal amplitude and with a reference phase relationship. (b) Tilting linear polarization at angle θ corresponds to advancing the phase of one CP component by θ and retarding the phase of the other by the same amount. (c and d) An elliptically polarized wave results from making the amplitudes of the CP components unequal. The larger component determines the sense. Note that the tilt angle remains constant when only amplitudes are varied.

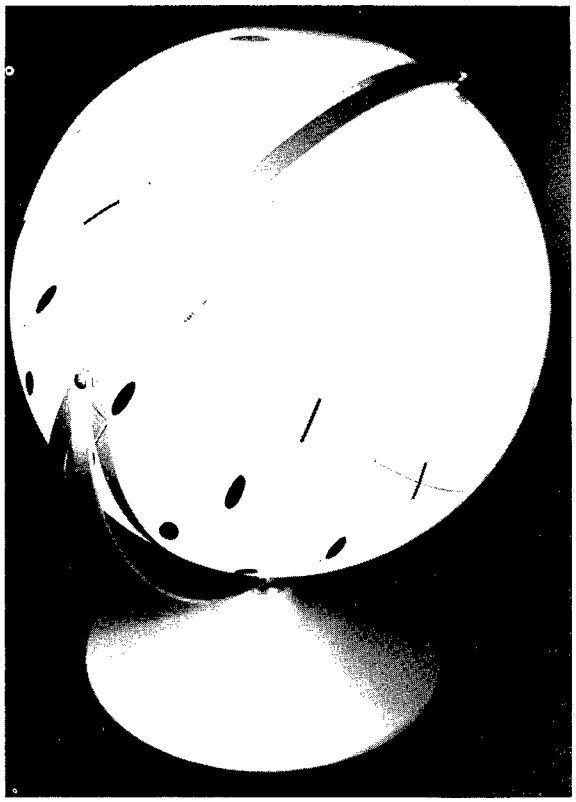

Fig. 2 — Model of a Poincaré polarization sphere. Poles represent opposite senses of circular polarization. Linear polarizations are located on the equator. Tilt angle is a function of longitude. Latitude is a measure of axial ratio.

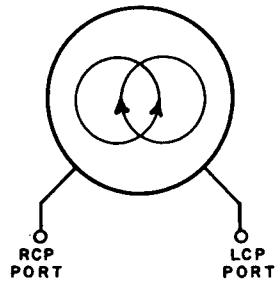

Fig. 3 — Schematic representation of a two-port, bicircularly polarized antenna

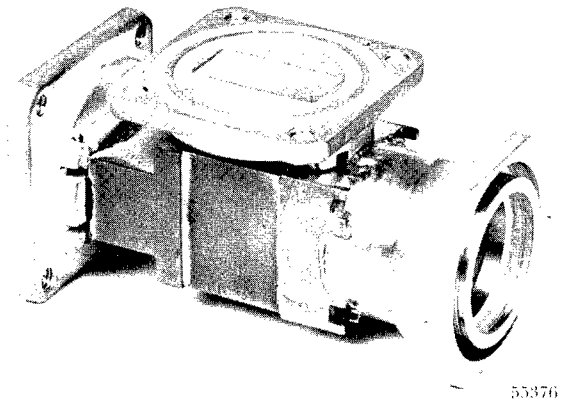

Fig. 4 — Commercially available dual mode transducer adapted for coupling to orthogonal TE_{11} modes in circular waveguide.

GENERATION OF POLARIZED WAVES

The development of a polarization-diversity capability must center about antenna development, since it is at this point that the polarization of the transmitted wave is established. The class of antenna to be investigated consists basically of a symmetrical radiating structure having two input ports which couple to orthogonal polarizations. Although any set of orthogonal polarizations can be used, the major emphasis will be placed on the two-port circularly polarized antenna shown schematically in Fig. 3. In practice the form of the antenna can be quite varied, ranging from a spiral with a port at the center and one on the periphery (17), to a conical horn coupled through a quarter-wave plate to a dual-mode transducer (Fig. 4). In these antennas the two ports permit switching between the two orthogonal polarizations or simultaneous use of both. In the latter case, as long as the transmission is over a single, isotropic path, two independent channels are available because of the orthogonality condition.

This dual-port type of CP antenna can be incorporated into a circuit (Fig. 5) which permits the generation of any polarization, and the ability to change from one polarization state to another. The signal can be introduced into a power divider, passed through a differential phase shifter, and into the two-port (or bipolarized) CP antenna. Since the power divider varies only the relative amplitudes of the CP components, the control can be labeled axial ratio and calibrated as such. The differential phase-shift section, controlling as it does the phase relationships between the two CP components, can be calibrated in terms of tilt, or orientation angle. It should be noted that if complete isolation is specified between the two input ports of the power divider, and if the network is reciprocal, the input ports always represent orthogonal polarizations. One embodiment of this type of antenna is the polarization controller shown in Fig. 6. The device consists of a

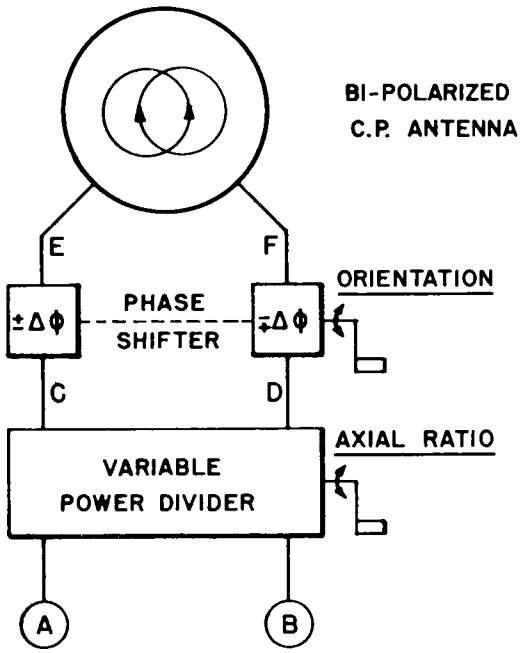

Fig. 5 — Schematic of a variable-polarization antenna with independent control of axial ratio and orientation angle

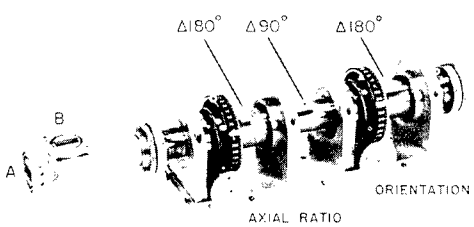

Fig. 6 — A microwave polarization controller for generating or receiving any desired polarization. Ports A and B couple to orthogonal polarizations regardless of the control settings.

dual-mode transducer, a rotatable half-wave plate, a fixed quarter-wave plate, a second rotatable half-wave plate, and a conical horn. On transmission, the first half-wave plate establishes the angle of the plane of linear polarization incident on the quarter-wave plate. The wave emerging from the quarter-wave plate will have an ellipticity depending on the orientation of the first half-wave plate. The orientation of the second half-wave plate controls the relative phase between the CP components of this elliptical wave, thereby establishing the tilt angle of the radiated wave.

With the polarization controller set to produce a linear or elliptical polarization, a continuous change of phase will result in a rotation of the major axis of the emergent wave. The rotation rate will be one-half the rate of change of phase. To produce a rotating polarization, it is possible to simplify the circuit by noting that a continuous rate of change of phase is just another way of expressing a different frequency. Thus, if two signals of different frequencies are introduced into the two ports of a CP antenna the output will be a rotating polarization (22,26), either linear or elliptical, depending on the relative amplitudes of the signals. The rotation rate will be one-half the difference between the frequencies of the input signals, and is limited only by the bandwidth of the components.

In the same vein, the phase between two input signals of the same frequency can be varied about some reference point in accordance with some intelligence. Instead of rotating, the major axis of the polarization ellipse would oscillate and the intelligence would be transmitted as a polarization modulation (23).

It has been shown that a simple two-port circularly polarized antenna can be used to synthesize any polarization with independent control of axial ratio and orientation angle, that the two input ports always represent orthogonal polarizations, that the selected polarization can be rotated at virtually any rate, and that the polarization can be modulated. Applications of this polarization capability will be discussed after techniques for analyzing the state of polarization have been considered.

RECEPTION OF POLARIZED WAVES

To develop fully the potential of polarization diversity, the receiver must also have a multipolarization capability. In some cases it is sufficient that the receiving antenna be a two-port device providing a fixed set of orthogonal components of the incoming signal. The conical-horn, dual-mode transducer combination mentioned previously is adequate for this purpose. In other cases, it may be desirable to be able to select or change the set of orthogonal polarizations to be observed. The polarization controller (Fig. 6) will serve this end.

At other times, a complete definition of the state of polarization may be the desired information.

A polarimeter (27) based on the trimode turnstile waveguide junction provides a convenient tool for making measurements of the phase and amplitude relationships of the polarization components on an instantaneous basis (Fig. 7). The device is shown schematically in Fig. 8. The signal enters through the circular port, and orthogonal linear components couple to adjacent crystal mixers (the same component couples to opposing mixers, which are connected in a balanced arrangement). A local-oscillator signal, injected into the coaxial port, excites all mixers equally. The intermediate frequency (i-f) signals out of the mixer have the same relative phase and amplitude characteristics as the orthogonal components of the incident rf wave, and as such serve to define the polarization state at a lower, more convenient frequency. If the outputs are applied to orthogonal deflection axes of a scope, a Lissajous pattern will be generated depicting the incident polarization. The various types of polarization discussed previously are shown pictorially in Fig. 9 as they would appear on the polarimeter display. Across the top are pictured linear, elliptical, and circular polarizations. The middle row shows a rotating linear polarization, orthogonal elliptical polarizations, and the presentation obtained with an amplitude-modulated CP wave. The bottom row shows an oscillating linear polarization obtained through polarization modulation and, finally, a rotating elliptical polarization.

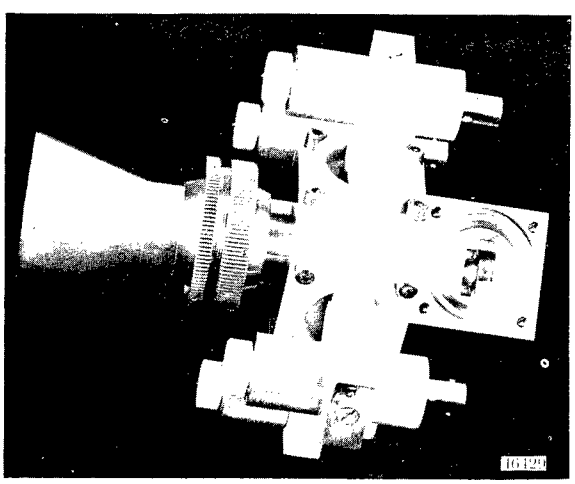

Fig. 7 — Mixer assembly for instantaneous polarimeter. Signal enters conical horn; local oscillator is injected at waveguide port. Mixer outputs represent linear components of incident signal.

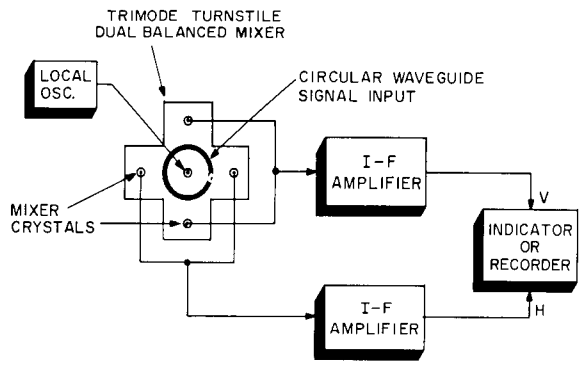

Fig. 8 — Block diagram of an instantaneous microwave polarimeter

In this type of display, the polarization sense is not explicit and must be determined separately. In principle, it involves adding the two linear components together in phase quadrature, and comparing the amplitudes of the resultant "sum" and "difference" components. These components correspond to the CP components of the original signal, and hence can be compared to determine sense. This quadrature addition might be done at i-f in an appropriate quadrature hybrid junction or phase-shift network, or at rf using conventional microwave quadrature hybrids. The four-component polarization resolver (28) shown in Fig. 10 is a polarimeter (Fig. 7) modified by the addition of a 3-db quadrature hybrid junction. This device can be used as a polarimeter; and sense can be derived from a simple comparison of CP component amplitudes.

APPLICATIONS OF POLARIZATION TECHNIQUES

The ability to generate and detect signals of any desired polarization greatly increases the flexibility of radar and communication systems. Referring to the areas of application mentioned in the introduction, polarization techniques can be applied to air traffic control for a number of purposes. For instance, it is known that rain clutter can be reduced if the radar can transmit and receive circular polarization of the same sense (5-9). In the simplest case the water droplets are assumed to be spherical, causing the reflected signal to be of opposite sense to that which was transmitted and thus to be rejected at the antenna. Aircraft usually cause the backscattered signal polarization to have components in both senses.

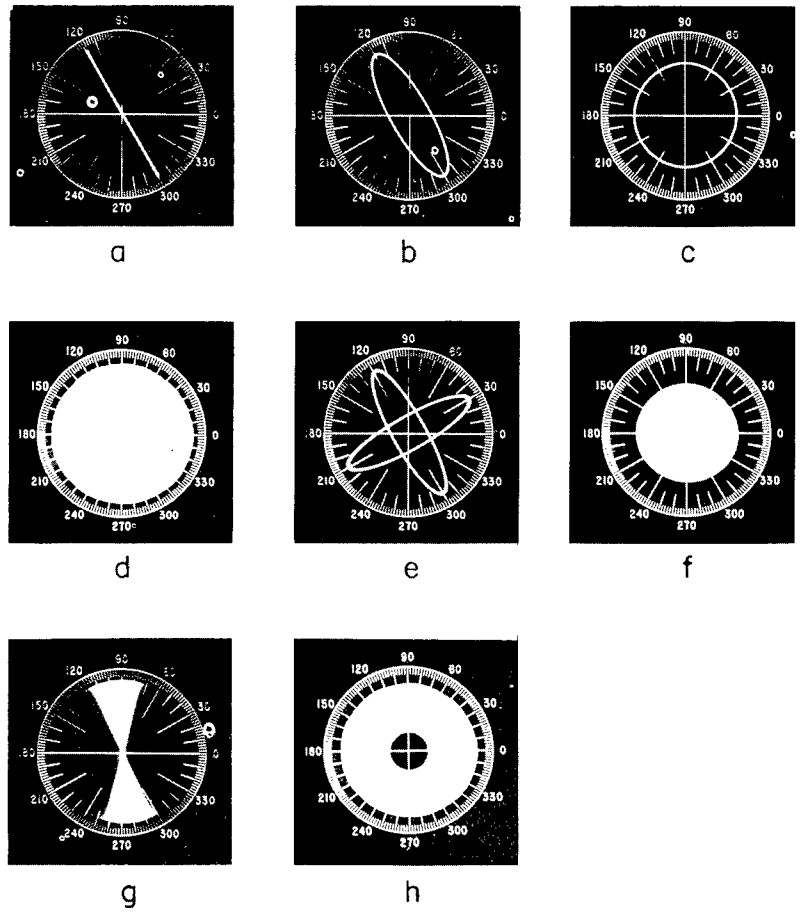

Fig. 9 — Polarimeter presentations of some polarizations obtainable with two port antennas; (a) linear, (b) elliptical, (c) circular, (d) rotating linear, (e) orthogonal elliptical, (f) amplitude-modulated circular, (g) oscillating linear (polarization modulation), and (h) rotating elliptical

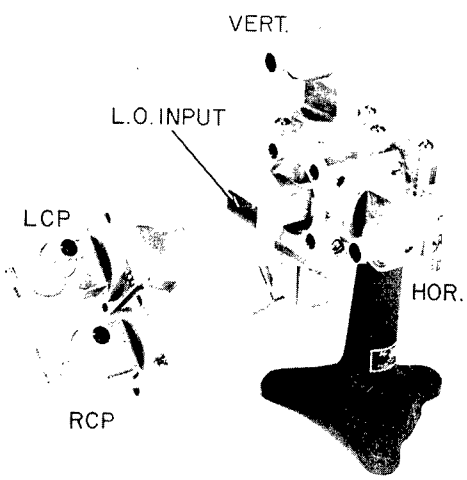

Fig. 10 — Polarization resolver which resolves an incident wave into linear and circular components simultaneously. Phase and amplitude relationships between orthogonal components are preserved.

If the radar is equipped with a two-port CP antenna, the return signals from the precipitation, as well as from the aircraft, will be in the opposite-sense channel, while aircraft return will predominate in the same-sense channel. Given independent control of the levels of these two channels, the aircraft controller could establish a display of aircraft alone or with the precipitation areas superimposed. Vectoring of aircraft around these areas would then be facilitated. In actuality, of course, the scatterers in the precipitation zone may not have the symmetry assumed previously. In such cases control of the transmitted polarization will enable the aircraft controller to adjust polarization for the optimum signal-to-clutter ratio.

Polarization techniques can be applied to meteorological studies and the investigation of cloud physics. A measure of the backscattered polarization from clouds can help to determine the shape

of the scatterers within the cloud, providing more information about the transition regions from water to ice.

An interesting application of rotating polarization is in the measurement of the polarization characteristics of antennas. Most antennas, with the exception of a simple dipole, have polarization characteristics which vary over the radiated field. An indication of this variation is shown in Fig. 11, where the E- and H-plane patterns of an optimum conical horn are plotted. Superimposed on these patterns are the polarimeter displays at various angles off axis when the horn is illuminated with a circular polarization. The polarization variations are quite evident. If it is assumed that the horn is to receive circular polarization, then much of the information contained in this figure can be obtained through the use of a rotating linear polarization. Along those directions where the horn is circularly polarized, a rotating input polarization will cause no variation in the received signal strength, but as the horn polarization departs from circular the received signal strength will vary cyclically. Kales (1) has shown that the magnitude of these variations will be a direct measure of axial ratio. An example of the results of this technique is given in Fig. 12. In this test the conical horn of the previous figure was coupled to a quarter-wave plate to make it a circularly polarized antenna. The pattern was then taken using a rotating linearly polarized source. The axial-ratio variations noted in the polarimeter pictures of Fig. 11 are immediately translated into quantitative values by measuring the maximum and minimum values in Fig. 12.

In the area of communications, system sensitivity can be enhanced in communicating with space vehicles, for example, if compensation is made for polarization variations caused by the ionosphere or by changes in vehicle attitude. On the other hand, radiations of a known polarization from stabilized orbiting vehicles can be used to measure the integrated electron content of the ionosphere. In scatter communication, signal reliability might be improved by automatic tracking of incoming signal polarization. Since the scatter path is the product of many variables, it is to be expected that the optimum polarization for maintaining the link will also vary. Thus, transmitter polarization can be adjusted, according to information sent over the control link, to match the variations in this optimum polarization, and thus keep the circuit open for longer periods of time.

The two-port circularly polarized antenna can be used to provide a two-channel point-to-point communication system. The polarization orthogonality provides isolation between the channels, and the use of circular polarization eliminates the need for precise polarization alignment of the transmitting and receiving antennas.

Circular polarization is currently being used in many radar beacon tracking applications to avoid signal dropout, which occurs in linearly polarized systems when, due to vehicle attitude changes, transmitter and receiver become orthogonally polarized. This polarization misalignment problem could be particularly acute in certain space-communication systems when using linear polarization. On the other hand, using circular polarization, and with the antennas directed at each other, relative changes in orientation will not affect communication. This principle has been applied in a number of communication satellites, and applies as well to the problem of communication between spacecraft. A further advantage of using CP in such cooperative communication systems is that a simple multimode monopulse tracking technique (29) can be used to maintain directional alignment of the antennas.

A special application of CP waves is to be found in a novel continuous phase shifter or frequency translator (24). The phase-shifting element in this mechanical device (Fig. 13) is a small, low-mass rotary dipole which is mounted transversely in a short-circuited section of circular waveguide operating in the dominant mode (TE_{11}). When the dipole is positioned one-quarter wavelength in front of the short circuit, it functions as a quarter-wave plate, and an incident CP wave is reflected as a CP wave of the same sense. However, when the dipole is rotated about the axis of the waveguide, the phase of the reflected CP wave changes. Each revolution of the dipole introduces exactly 720 degrees of phase shift. If the dipole is made to spin at a constant rate, as by means of the motor shown, the reflected wave will be shifted in frequency by twice the dipole rotational frequency. The reflected CP wave, being of the same sense as the incident wave, is reflected back toward the input port, and is extracted by means of a ferrite circulator.

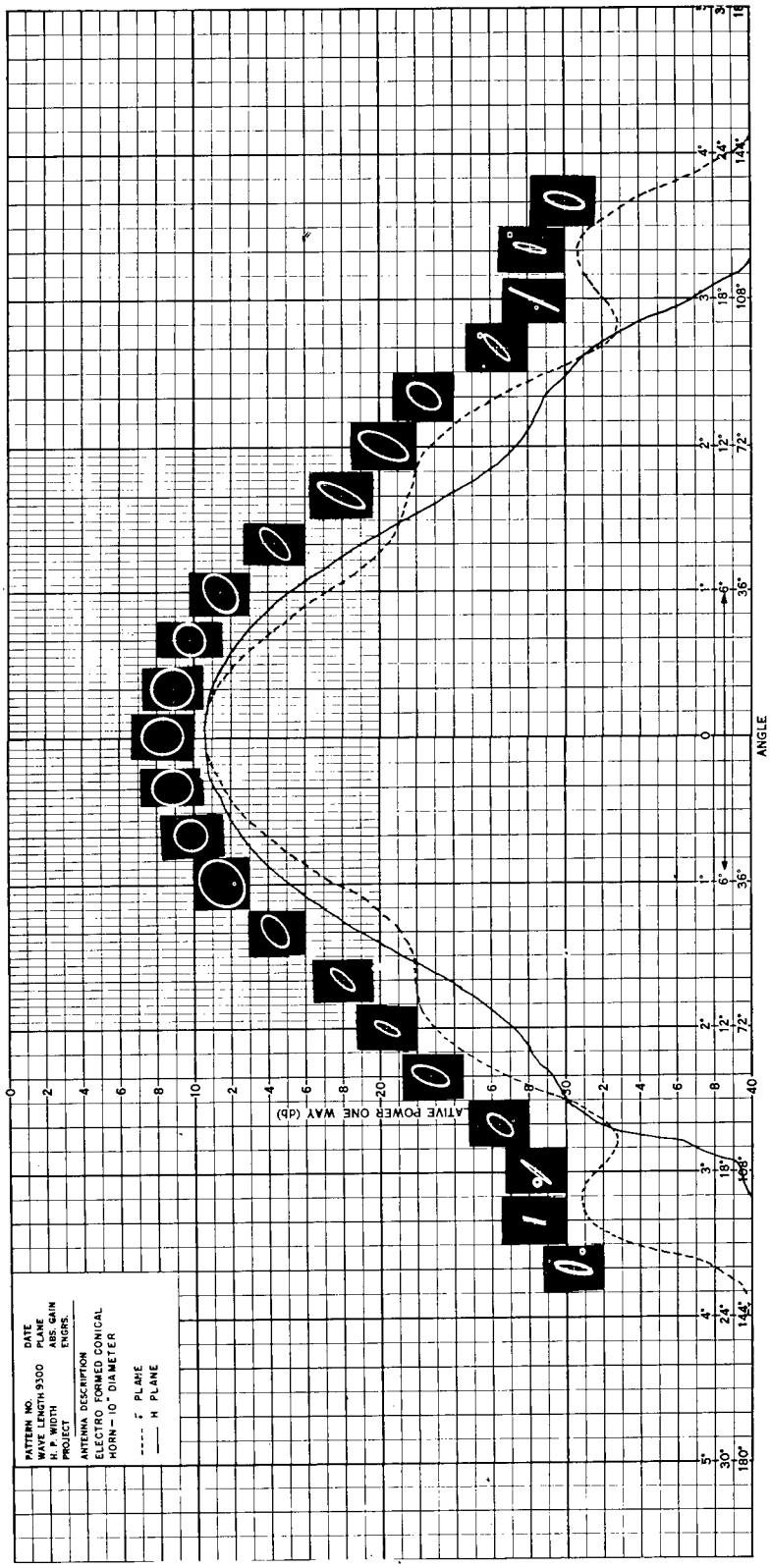

Fig. 11 — Polarization variations over the radiated field of a conical horn antenna

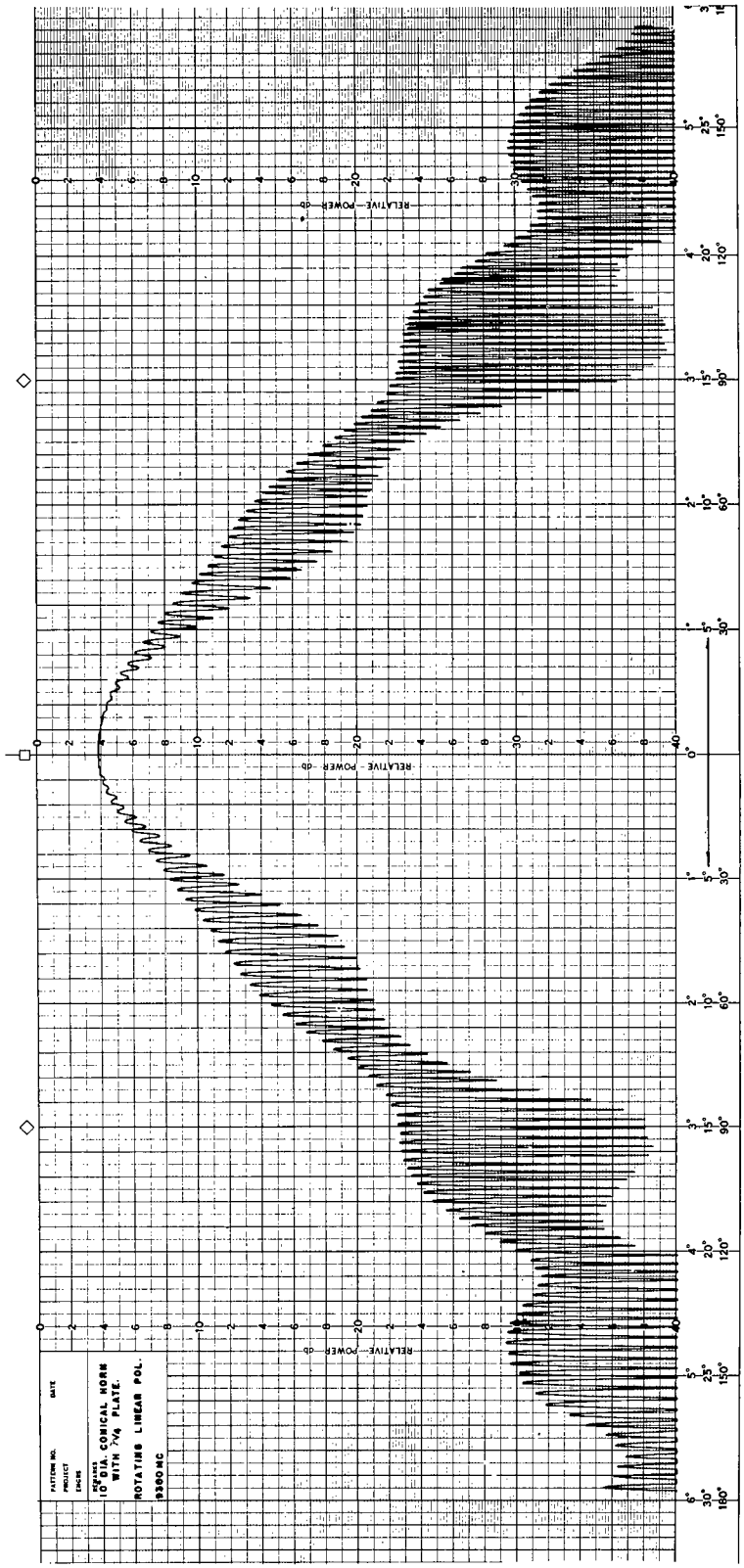

Fig. 12 — Pattern of conical horn antenna using rotating linearly polarized illumination. Axial ratio in decibels at any angle is obtained by subtracting minimum value from maximum value.

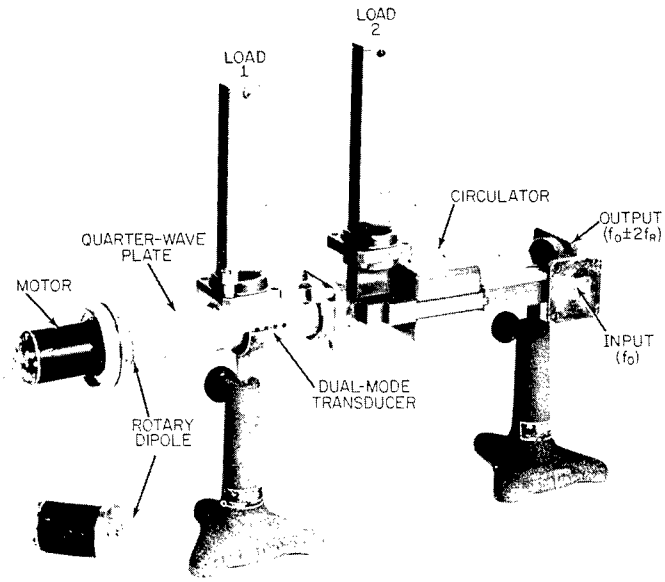

Fig. 13 — Mechanical frequency translator, featuring high speed, low loss, and excellent suppression of unwanted signals

Ideally, the device is lossless, while insertion loss of a practical unit barely exceeds that of the circulator and is typically under 0.5 db. The unwanted sideband and carrier are suppressed in excess of 35 db over a 12-percent band at X-band, while greater suppression is attainable with a reduced bandwidth. The device has application to rapid servo control of phase, such as for polarization control and array scanning. Because extraneous frequency components are highly suppressed, it is also valuable as a frequency translator for coherent and homodyne detection. Frequency shifts of 800 cps are readily obtained, while shifts of several kilocycles have been attained.

CONCLUSIONS

In light of the potential benefits to be derived in many applications, the incorporation of polarization diversity in future radar and communication systems warrants serious consideration. The advantages of using dual circularly polarized antennas for functional control of polarization have been emphasized because of the simplicity in concept and analysis offered by the treatment of polarization problems on the basis of circularly polarized components. The techniques and components described for use in systems incorporating polarization diversity are representative of the variety of polarization measurement and control means now available.

REFERENCES

1. Rumsey, V.H., Deschamps, G.A., Kales, M.L., and Bohnert, J.I., "Techniques for Handling Elliptically Polarized Waves with Special Reference to Antennas," *Proc. IRE* **39**:533-552 (May 1951)
2. Sinclair, G., "Modification of the Radar Range Equation for Arbitrary Targets and Arbitrary Polarization," Ohio State University, Antenna Laboratory Report 302-19, Sept. 1948
3. Sinclair, G., "The Transmission and Reception of Elliptically Polarized Waves," *Proc. IRE* **38**:148-151 (Feb. 1950)
4. Graves, C.D., "Radar Polarization Power Scattering Matrix," *Proc. IRE* **44**:248-252 (Feb. 1956)
5. Panasiewicz, J.J., "Enhancement of Aircraft Radar Return by Use of Airborne Reflectors and Circular Polarization," 1956 IRE Conv. Rec., Part 8, pp. 89-96
6. Hunter, I.M., "The Application of a Two Channel Circularly Polarized Radar to the Suppression of Rain Echoes," Radar Research Establishment (RRE) J., pp. 1-38, Apr. 1955
7. Browne, I.C., and Robinson, N.P., "Cross-Polarization of the Radar Melting-Band," *Nature* **170**:1078-1079 (Dec. 20, 1952)
8. "Polarization Properties of Rain Return at X-Band," Ohio State University Quarterly Progress Report 389-22 under Air Force Contract AF 28(099)-90, 1954
9. "Weather Radar Research," M.I.T., Dept. of Meteorology Reports on Contract DA-36-039-sc-42625, beginning March

1953, and on Contract DA-36-039-sc-64472, beginning March 1955

10. George, H.H., "Microwave Modulating Attenuator Roll Stabilization System," U.S. Patent No. 2,997,255, Aug. 22, 1961
11. Wilkes, G., "Polarization Detector," U.S. Patent No. 2,998, 941, Sept. 5, 1961
12. Kennaugh, E.M., "Polarization Properties of Radar Reflections," Ohio State University, Antenna Laboratory Report 389-12, ASTIA No. AD 2494, Mar. 1952
13. Copeland, J.R., "Radar Target Classification by Polarization Properties," *Proc. IRE* **48:**1290-1296 (July 1960)
14. Huynen, J.R., "A New Approach to Radar Cross-Section Measurements," 1962 IRE Conv. Rec., Part 5, pp. 3-11
15. Bolljahn, J.T., "Effects of Satellite Spin on Ground-Received Signal," *Trans. IRE AP-6* **(3):**260-267 (July 1958)
16. Rankin, J.B., "Transmission Efficiency Between Simple Antennas on the Basis of Orientation and Polarization," *Advances in the Astronautical Sciences* **6:**27-37, New York: Macmillan, 1961
17. Jones, S.R., and Turner, E.M., "Polarization Control with Oppositely Sensed Circularly Polarized Antennas," 1959 Proc. NAECON, Dayton, Ohio, May 4-6, 1959, pp. 588-595
18. Cohen, M.H., "Radio Astronomy Polarization Measurements," *Proc. IRE* **46:**172-183 (Jan. 1958)
19. Gardner, F.F., and Whiteoak, J.B., "Polarization of Radio Sources and Faraday Rotation Effects in the Galaxy," *Nature* **197:**1162-1164 (Mar. 23, 1963)
20. Mayer, C.H., Hollinger, J.P., and Allen, P.J., "A Search for 3.15-cm-Wavelength, Circularly Polarized Radiation from Discrete Sources," *The Astrophysical Journal* **137:**1309-1310 (May 15, 1963)
21. Ferris, J.E., "Study of Polarization Modulation Techniques," Melpar Co., Final Report on Contract AF 19(604)-4988, Feb. 1961
22. Allen, P.J., "Generating a Rotating Polarization," *Proc. IRE* **48:**941 (May 1960)
23. Allen, P.J., "Polarization Modulation Apparatus," U.S. Patent No. 3,092,828, June 4, 1963
24. "Frequency Translation Techniques," Report of NRL Progress, pp. 43-44, March 1962
25. Shurcliff, W.A., "Polarized Light," Harvard University Press, Cambridge, Mass., pp. 15-19, 1962
26. Penstone, S.R., and Adey, A.W., "Generating a Rotating Polarization," *Proc. IRE* **49:**1089 (June 1961)
27. Allen, P.J., and Tompkins, R.D., "An Instantaneous Microwave Polarimeter," *Proc. IRE* **47:**1231-1237 (July 1959)
28. Allen, P.J., "A Four-Component Polarization Resolver," *Trans. IRE* **MTT-10(3):**220 (May 1962)
29. Cook, J.S., and Lowell, R., "The Autotrack System," *Bell System Tech. J.* **42:**1283-1307 (July 1963)

UNCLASSIFIED