UNCLASSIFIED

NRL Report 6184

The Rainbow Optical Landing Aid

BARBOUR LEE PERRY

Engineering Psychology Branch
Applications Research Division

February 1, 1965

U.S. NAVAL RESEARCH LABORATORY
Washington, D.C.

Copies available from Office of Technical Services
Department of Commerce – $.50
Washington, D.C. 20235

UNCLASSIFIED

CONTENTS

Abstract	ii
Problem Status	ii
Authorization	ii
BACKGROUND	1
INTRODUCTION	1
ANALYTICAL METHOD	2
RAINBOW OPTICAL LANDING AID	4
Theory of Operation	4
Derivation of Color Rate Expression	7
System Improvements Achieved Through Use of Rainbow Display	11
Rainbow Display Equipment Design Principles	12
Experimental Unit	13
SUMMARY	15
ACKNOWLEDGMENTS	16
REFERENCES	16

ABSTRACT

The Bureau of Naval Weapons is conducting a program to increase the safety of landing high-performance aircraft aboard carriers, particularly in nighttime operations. Through a mathematical analysis of the total system, two prime sources of system inaccuracies are pinpointed in the use of the current display system. These are: (1) insufficient display gain, and (2) the absence of any derivative, or lead, signals in the displayed error indication which were shown analytically to be required for acceptable man-machine system stability and response.

The Rainbow Optical Landing Aid is designed to provide such lead, at high gain, by means of a color-sequence-coded signal. A red-white-blue sequence on the indicator tells the pilot to increase his sink rate; a blue-white-red sequence indicates that a smaller sink rate is required. A steady green signal informs the pilot that he is maintaining an approach within ±0.1 degree of the commanded glide path. Any steady color other than green indicates that he is not within ±0.1 degree of glide path but is controlling his sink rate so as to approach the glide path exponentially.

The Rainbow Optical Landing Aid is an optical-geometrical system which requires no mechanical or electronic sensing of flight parameters. In preliminary tests it has been used in bright sunlight at ranges as great as three and a half miles.

A high level of accuracy is achieved in using the Rainbow Optical Landing Aid because of three outstanding features:

1. Display sensitivity independent of range. The system is sensitive to small errors even at long ranges, providing the pilot with a positive indication of error at any conceivable range at which he might wish to turn "final." This desirable characteristic is achieved through a color-sequence coding of the error indication.

2. Provision of a quickening term. The error indication tells the pilot how to modify sink rate rather than altitude. This greatly simplifies aircraft control and contributes to system accuracy.

3. Sensitivity of display to angular rate inversely proportional to error from glide path. The use of quickening makes feasible a nonlinear sensitivity between displayed error and actual error. The sensitivity becomes very high near glide path, thus contributing materially to the precision control of altitude.

PROBLEM STATUS

This is an interim report; work on this problem is continuing.

AUTHORIZATION

NRL Problem Y02-21
Project RS-11-50-016/652-1/F012-06-02

Manuscript submitted September 24, 1964.

THE RAINBOW OPTICAL LANDING AID

BACKGROUND

The Bureau of Naval Weapons is conducting a program directed towards increasing safety in the landing of high-performance aircraft aboard carriers, particularly in night-time operations. Extensive work is being carried out towards the development of an automatic landing system, but until this system becomes fully operational the pilot must bring his aircraft aboard by manual control alone. The Rainbow Optical Landing Aid is designed to provide information to the pilot which will assist him in this task.

INTRODUCTION

A number of landing accidents, which are clearly not a result of aircraft malfunctions such as engine failure, are attributed to pilot error. This is merely another way of saying that the pilot was not controlling his aircraft with sufficient accuracy immediately prior to and at the moment of touchdown. The question of pilot error can be viewed in terms of a statistical event, for it is believed that his "error" represents only a quantitative difference from his acceptable performance.

There are a number of aircraft flight parameters which must be precisely controlled in order to achieve a safe landing. For a large number of landing events, the individual values of each of these parameters will be distributed statistically in some way. Let us say, for example, that the most frequent point of touchdown is located at a point along the deck of an aircraft carrier such that the aircraft will engage the third arresting wire. However, a large number of landings are characterized by touchdown points such that the second or fourth wire is engaged. A few landings have touchdown points which lead to engagement of either the first or the last wire, and fewer still have touchdown points so far from the desired point of impact that no wire can be engaged. Occasionally there is a deviation in the landing sufficiently great as to constitute a ramp strike. Fortunately, these latter cases are so infrequent that they fall near the extremes of the distribution curve of touchdown points.

Acceptable control of a given parameter can be defined as that control which places the individual values within a given number of standard deviations from the mean. Likewise, if an event falls near the extreme of the distribution, it is considered to represent insufficient accuracy of control and, therefore, to be the cause of an accident. Once the nature of the distribution of touchdown points is known, it is a straightforward matter to predict the frequency with which an accident due to improper touchdown point will occur. By the same procedure it is possible to predict the rate of accidents due to improper control of other parameters, such as direction of motion at the time of touchdown, craft attitude, or any of the other critical flight parameters.

One manner of reducing the accident rate would be to reduce the spread of each of the distribution curves of the critical parameters until a greater number of standard deviations are included within the definition of a safe landing. Ideally, one would like to encompass even the extremes of each of the distribution curves in the domain of safe landings. This is simply another way of saying that the landing accident rate can be reduced by providing the pilot with the means necessary to increase materially the landing accuracy.

ANALYTICAL METHOD

On the basis of past experiences with man-machine control systems, one of the first approaches to increasing the precision of system performance is the consideration of the nature of the control loop involved in the man-machine control system. In other words, it has been found to be expedient, and indeed necessary, to study the control loop made up of man, vehicle, display, and geometry in order to determine the dynamic contribution to overall system performance by each of these system elements, as well as by the interactions among these elements.

The control system can be represented by means of a generalized block diagram (Fig. 1) and by subsequent, specific, detailed block diagrams to delineate the pertinent characteristics of each element of the system. Such a representation of the system serves to clarify those interrelationships developed among the system elements which are critical to an understanding or a description of the overall system performance. Once the system of interest is configured in this way, an analysis can be performed to (a) determine the overall performance to be expected of this combination of elements and (b) locate the sources of any inaccuracies in system performance.

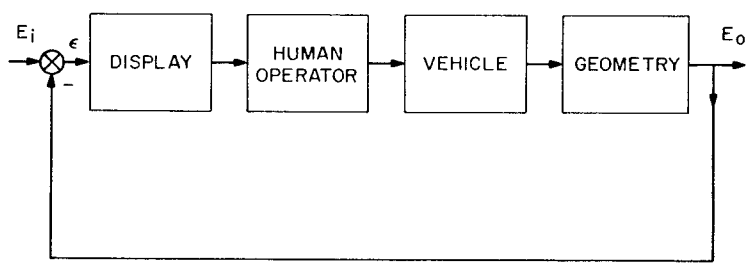

Fig. 1 - Generalized block diagram of a typical man-machine control system

In brief, such an analysis was carried out for the landing of high-performance aircraft aboard carriers. (For discussion of a typical analytical methodology for such a problem, see Ref. 1.) Specifically, the analysis was based on the dynamics of the A-3 (Sky Warrior) aircraft and the Fresnel Lens Optical Landing System (FLOLS). The type of solution sought was a relatively simple modification to the present system (see Fig. 2), for use until the automatic system becomes operational. Such a solution should require no extensive sensing equipment; it should furthermore be based on instrumentation located on the carrier, thereby making it usable by several aircraft simultaneously.

The analysis did indeed reveal the performance of the present system to be insufficiently accurate to include the desired number of standard deviations of the critical parameters within the limits of a safe landing. Further, the analysis identified two prime sources of system performance inaccuracy in the currently used FLOLS. The system inadequacies arising in the use of this display were shown to be (a) insufficient gain and (b) the lack of derivative information, or even of a signal from which this necessary information could be usefully derived by the pilot. (For a detailed discussion of the low gain characteristic of the FLOLS, see Ref. 2. For a verification of the necessity of derivative or rate information in higher order man-machine control systems, see Refs. 3-5.)

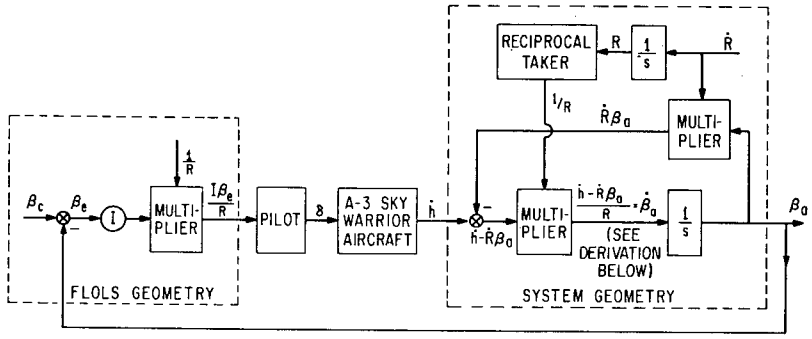

β_c = COMMAND GLIDE PATH ANGLE
β_a = ACTUAL ANGULAR POSITION OF AIRCRAFT
β_e = ANGULAR ERROR OF AIRCRAFT
δ = CONTROL
h = AIRCRAFT ALTITUDE
R = RANGE TO TOUCHDOWN
I = IMAGE DISTANCE OF FRESNEL LENS = 150 FT.

DERIVATION OF THE RELATION FOR $\dot{\beta}_a$:

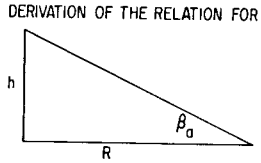

FOR SMALL ANGLES, $\beta_a = h/R$.

DIFFERENTIATING, $\dot{\beta}_a = (R\dot{h} - \dot{R}h)/R^2$.

BUT $h = R\beta_a$.

$\dot{\beta}_a = (R\dot{h} - \dot{R}R\beta_a)/R^2 = (\dot{h} - \dot{R}\beta_a)/R$.

Fig. 2 - Block diagram of pilot-aircraft-geometry-FLOLS control loop

The low gain inherent in the Fresnel lens display system results from the "displacement" coding of the error signal, together with the limited physical dimensions of the display and its relatively long distance from the pilot's eye. Display sensitivity, or display gain, is defined to be the ratio of the angle subtended at the pilot's eye by the error indication to the actual error of the aircraft. With reference to the FLOLS, the sensitivity or gain G', relating the angle subtended at the pilot's eye by the displacement of the error indication to the angular error of the aircraft, is directly proportional to the image distance of the lens and inversely proportional to the range from touchdown. Where R is the range in feet and the image distance I of the lens is 150 ft, the sensitivity is given by $G' = 150/R$. (This derivation is developed in detail in Ref. 2 where the system is set up for the control of altitude h, rather than angular position β. For the altitude loop, the sensitivity is $G = 150/R^2$ where $h = R\beta$ for small angles β.) This sensitivity makes tracking with the Fresnel lens from a range of about 1 mile comparable to tracking a signal on a 3/4-inch-diameter cathode-ray tube from a distance of about 83 ft.

The problem of the low display gain characteristic of the Fresnel lens is further complicated by the introduction of human-generated "noise" into the system at this point. An extremely low signal-to-noise ratio then results, a situation which the design engineer should always try to prevent.

The lack of rate, or derivative, information in the FLOLS is due to the fact that this system displays a signal which is proportional to the instantaneous error in the altitude of the aircraft. This signal is presented in terms of the displacement between a set of stationary datum lights and a light which appears to move vertically as a function of craft altitude. The display system, as presently configured, gives no indication of the rate at which the aircraft's altitude is changing or, for that matter, of the rate at which its altitude rate <u>should</u> change if the pilot is to acquire the prescribed glide path. Such lead information, however, is precisely what the analysis showed to be required in the system, that is,

required to be presented to the pilot on the display or required to be developed by the pilot from the display of altitude error. It is clear that only altitude, not altitude-rate information, is displayed to him directly on the FLOLS.

The human has been shown to be a relatively poor differentiator (see Ref. 5), even under ideal circumstances. When the signal to be differentiated is characterized by extremely low gain, his chances of deriving useful rate information are almost nil.

In short, a systems analysis of the display-pilot-aircraft combination in the carrier landing configuration reveals a significant absence of a necessary signal at a specific point in the system. This is interpreted as a defect in the presently used optical landing system. The solution to the problem is sought through development of an alternate piece of equipment to provide the necessary information.

RAINBOW OPTICAL LANDING AID

Theory of Operation

The Rainbow Optical Landing Aid is designed to provide the pilot with information regarding the appropriateness of his rate of descent during the final leg of his landing approach. The instrument has a gain which is independent of the pilot's range to touchdown. The altitude-rate, or sink-rate, error information is presented to the pilot by means of a tricolor dynamic light beam. He interprets the information inherent in the light beam on the basis of a color sequencing which he sees. As the pilot matches his rate of descent to that commanded by the color-sequencing system, he is brought smoothly onto the desired glide path.

The geometry of the Rainbow Optical Landing Aid for a hypothetical static display of the light beams is illustrated in Fig. 3(a), which is greatly expanded in scale. In the drawing U represents the equipment unit, located on the carrier deck, from which an array of colored light beams emanates, R denotes a red beam of light, W a white beam, B a blue beam, G a green beam, and R′ and G′ denote flashing red and green beams, respectively. Such a hypothetical static array of light beams through which the pilot might be flying his aircraft would provide guidance to the proper point of touchdown, but along any path of approach. Only when the array is made dynamic does it assist him to land at the given point of touchdown by way of the prescribed glide path. (Actually, the Rainbow display is a dynamic presentation.)

However, let us take several cases of aircraft flights through the static array of projected light beams to illustrate the characteristics of the signal which would be displayed to the pilot under various circumstances. First, assume that the aircraft is in straight and level flight at some altitude within the array of beams. As it passes through the colored bands from red to white to blue to red . . . (see Fig. 3(b)) the pilot observes the indicator to change in color accordingly from red to white to blue. It is apparent that only by increasing his rate of descent can the pilot touch his aircraft down (within a finite distance); therefore, the red-white-blue color sequence on the indicator is interpreted as a command for greater sink rate. As another example, if the aircraft is initially above glide path but flying in such a direction that it will touch down astern of the carrier, i.e., short of the touchdown point (see Fig. 3(c)), the pilot sees a red-blue-white color sequence on the indicator. This he interprets as an indication of excessive rate of descent or as a command to sink less rapidly. If, on the other hand, the aircraft is initially below glide path and flying towards a point beyond the desired point of impact, it will pass through the colored beams in the reverse order. The pilot again interprets the resultant red-white-blue sequence as an indication of insufficient rate of descent (see Fig. 3(c)).

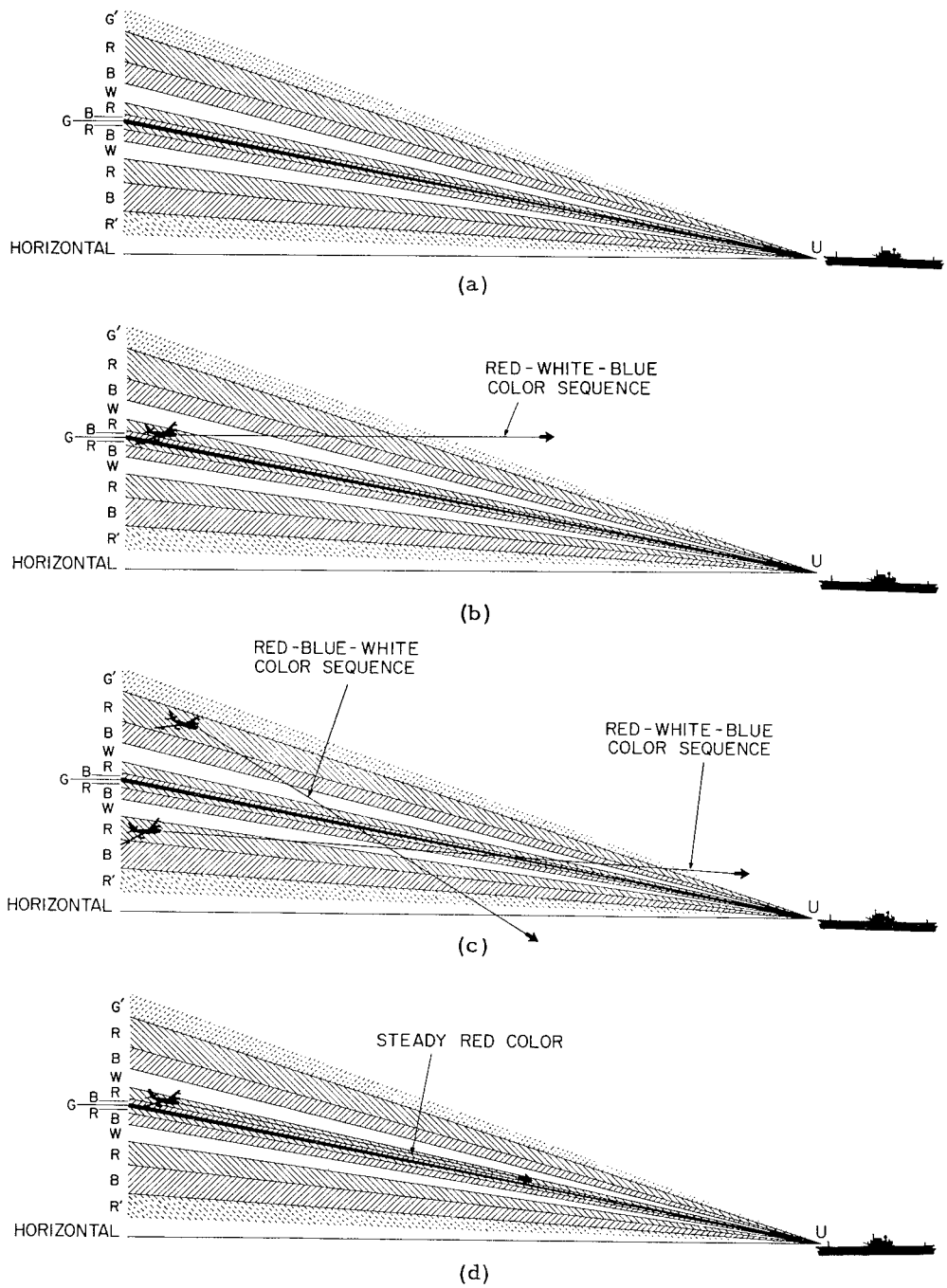

Fig. 3 - Geometry of the Rainbow Optical Landing Aid (Hypothetical Static Case). (a) Beam geometry; (b) level-flight-path, color sequence indicating that rate of descent is too small (red-white-blue sequence); (c) nonlevel-flight-path, color sequences indicating that rate of descent is too large (red-blue-white sequence) or too small (red-white-blue sequence); and (d) nonlevel-flight-path, steady color indicating that airplane is flying toward touchdown point.

If the aircraft is traveling a flight path which is wholly within any single light beam, the pilot observes a constant color on the indicator. The absence of any color sequencing indicates to him that he is indeed approaching the desired point of touchdown (see Fig. 3(d)). A steady green signal indicates, further, that he is approaching touchdown along the prescribed glide path.

When the aircraft is in either the interrupted green or red beam, the pilot interprets this flashing light as a warning that he is, respectively, dangerously far above or below the ideal glide path.

It is a straightforward matter to determine the color sequence observed by the pilot as he uses this static display to guide his aircraft towards the desired point of touchdown along other various flight paths. A red-white-blue color sequence consistently indicates an insufficient rate of descent, regardless of whether the aircraft is above or below the ideal glide path; that is, if the pilot continues in the same direction, he will overshoot the desired touchdown point. Conversely, a red-blue-white sequence is an indication of excessive rate of descent, that is, the pilot will undershoot the desired touchdown point. A steady color on the display is an indication that he is indeed headed towards the desired point of touchdown. However, only if the steady color is green is he approaching touchdown along the prescribed glide path, or with the ideal flight path angle.

It is apparent from the above discussion that such a hypothetical static array of lights would provide the pilot with rate information appropriate to the accurate control of touchdown point alone, regardless of the path of approach. However, the direction of craft motion just prior to and at the moment of touchdown was listed earlier as a flight parameter of critical importance in the execution of a satisfactory landing. The direction of motion is critical due to the fact that too large a flight path angle in the final moments of the approach can result in a hard landing, possibly in damage to the landing gear. On the other hand, too small an angle can prevent ramp clearance. It is in order to provide the pilot with sink rate information appropriate to the control of glide path angle, as well as touchdown point, that the actual Rainbow display was designed with specific dynamic characteristics.

The dynamic presentation of Rainbow information is accomplished by a continuous cycling of the red, white, and blue beams in toward the green beam, each beam moving at a rate which is proportional to its instantaneous angle from the glide path, i.e., at an exponential rate. (It is apparent that the angular size of each beam is, of necessity, also proportional to its displacement from glide path. As each beam approaches the glide path it becomes thinner, eventually vanishing into the green glide path beam.)

As in the hypothetical static case, the dynamic display provides rate-of-descent error information by means of the color sequencing which the pilot observes on the display: a red-white-blue sequence is the indication of insufficient rate of descent while the reverse red-blue-white sequence is evidence of too great a sink rate. The important difference between the hypothetical static configuration and the actual dynamic configuration, then, is the information which is conveyed to the pilot by a steady red, white, or blue color on the display. In the hypothetical static case this indication would inform him only that he was approaching the desired point of touchdown. In the actual dynamic case this indication signifies that he is approaching the ideal glide path, and hence eventually the desired point of touchdown at the proper angle of descent. This is to say that he is approaching the desired glide path (represented by the steady green indication) exponentially and will, if he controls his aircraft so as to maintain a constant color, neither undershoot nor overshoot the desired path of approach to the touchdown point. It is obviously immaterial which color he maintains on the display, for any beam will eventually lead him into the green glide path. The exponential sweep of the light beams results in a sink rate command which is always appropriate to his instantaneous position.

In brief, then, the pilot interprets (a) color sequencing as an indication of sink rate error, (b) a steady green as an indication that he is within the fixed limits of glide path, and (c) any steady color other than green as an indication that he is off glide path but is approaching it from above or below at the proper rate. The pilot can glean additional information regarding the size of his descent rate error from the rate of the color sequencing which he observes. That is, if the colors sequence very slowly he knows that his rate of descent is very close to that commanded by the system. On the other hand, the rapid sequencing of colors informs the pilot that his rate of descent is quite different from that commanded by the Rainbow system and therefore required in order to bring him onto the desired glide path exponentially.

Derivation of Color Rate Expression

A mathematical description of the color sequencing as observed by the pilot can be obtained from consideration of the spatial relationships or geometrical characteristics of the dynamic array of lights. For this purpose, a schematic diagram representing the characteristics of the commanded glide path and of one dynamic beam is constructed (see Fig. 4). In the diagram, β_c represents commanded glide path angle, β_a is the instantaneous angular position of the aircraft in the beam pattern, and β_e, which is the difference between the two, is the instantaneous angular error of the aircraft from glide path. The beam of interest (hatched area) is defined in terms of the two angles θ_T and θ_B, representing the top and bottom of the beam, respectively. Let us consider this beam, defined by the angular difference $\theta_T - \theta_B$, to be composed of a large number of "minibeams," or miniature beams, each of which is characterized by the geometrical properties of the real beams themselves; that is, the angular size and the angular rate of movement of each minibeam are proportional to its instantaneous angular distance from the commanded glide path. In the diagram, a single minibeam (cross-hatched area) is shown and is defined by the angles θ_p and θ_p', which represent the top and bottom of the minibeam, respectively. The minibeam of interest is arbitrarily chosen such that $\theta_p \equiv \beta_a$.

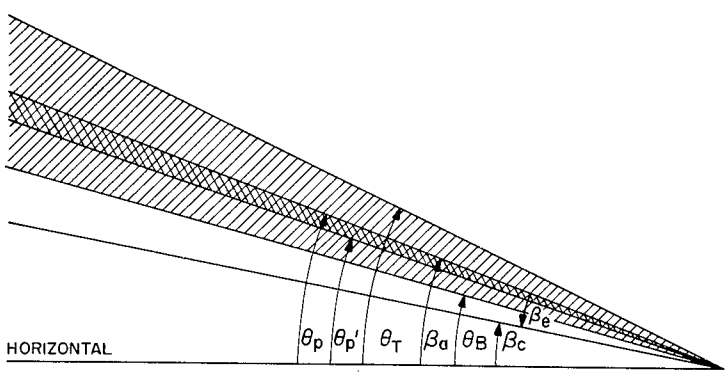

Fig. 4 - Geometry of one of the colored beams used in the Rainbow Optical Landing Aid. The beam (hatched area) is theoretically divided into miniature beams (cross-hatched area) to facilitate the mathematical description of color sequencing, discussed in the text.

If the pilot were to remain at a fixed angular position in the dynamic light pattern, each beam would sweep by him in a given time interval Δ_T and each minibeam would sweep by in a time interval Δ_t, where $\Delta_t << \Delta_T$. In other words, Δ_T and Δ_t represent the time duration of a beam and minibeam, respectively, where time duration is defined as the time required for a beam or minibeam to completely sweep past any point in the beam pattern. Because of the exponential nature of the beams and minibeams, their time duration is constant whatever the angular orientation of the given point. As indicated above, while the differences are small, the minibeams within a beam are neither identical in size nor moving at the same rate. Each minibeam, like the beams themselves, has a size and rate proportional to its distance from glide path. No approximation of equal size or of equal rate will be made in the following discussion.

The instantaneous color rate of the beam with respect to the pilot's eye is, by definition, the frequency of the passage of minibeams across the eye divided by the number of minibeams in one colored beam. That is,

$$\dot{C}_e = F_m/n \tag{1}$$

where $\dot{C}_e$ is the instantaneous color rate of the beam with respect to the pilot's eye, F_m is the frequency of minibeam passage across the eye, and n is the number of minibeams in a beam. It can be seen that the value of $\dot{C}_e$ is independent of the absolute value of the widths of the minibeams since F_m and n vary proportionately. However, with respect to any fixed point in space, the minibeam passage frequency F_m is constant.

Since each minibeam is of very short time duration, the frequency of the minibeams past the eye can be defined by

$$F_m = V_m/W_m \tag{2}$$

where V_m is the relative instantaneous speed of the minibeam with respect to the pilot's eye and W_m is the instantaneous width of the minibeam. Since W_m is very small (because of the short time duration Δ_t of the minibeam) both the angular position and the angular rate of the minibeam can be defined in terms of the position and rate of the top θ_p of the minibeam. The relative speed of the minibeam with respect to the pilot's eye is given by

$$V_m = \dot{\theta}_p - \dot{\beta}_a \,. \tag{3}$$

It should be pointed out that although the minibeam of interest is arbitrarily chosen such that $\theta_p \equiv \beta_a$, this choice imposes no restrictions on the general relationship existing between $\dot{\theta}_p$ and $\dot{\beta}_a$. The instantaneous width of the minibeam is defined by

$$W_m = |\theta_p - \theta_p'| \tag{4}$$

where the absolute value sign is required in order that minibeam width be a positive quantity regardless of whether the minibeam of interest is above or below the glide path. From Eqs. (2), (3), and (4) then, the frequency can be written as

$$F_m = \frac{\dot{\theta}_p - \dot{\beta}_a}{|\theta_p - \theta_p'|} \,. \tag{5}$$

UNCLASSIFIED

Since all the beams, and therefore the minibeams as well, approach the glide path at a rate proportional to their angular displacement from it, the exponential equations describing θ_p' and θ_p can be written

$$\theta_p' = \beta_e(0)e^{-\frac{(t+\Delta t)}{\tau}} + \beta_c \tag{6}$$

and

$$\theta_p = \beta_e(0)e^{-\frac{t}{\tau}} + \beta_c \tag{7a}$$

where $\beta_e(0)$ is the angular distance from the glide path at time $t = 0$, τ is the exponential time constant of every beam and minibeam, and Δt is the time duration of each minibeam. From Eqs. (6) and (7a),

$$\left|\theta_p - \theta_p'\right| = \left|\left(\beta_e(0)e^{-\frac{t}{\tau}} + \beta_c\right) - \left(\beta_e(0)e^{-\frac{(t+\Delta t)}{\tau}} + \beta_c\right)\right| = \left|\beta_e(0)e^{-\frac{t}{\tau}}\left(1 - e^{-\frac{\Delta t}{\tau}}\right)\right|.$$

But, from Eq. (7a),

$$\beta_e(0)e^{-\frac{t}{\tau}} = \theta_p - \beta_c, \tag{7b}$$

and θ_p was chosen such that

$$\theta_p - \beta_c = \beta_a - \beta_c .$$

However, the difference between the commanded glide path angle β_c and the actual angular position β_a of the aircraft is defined as the angular error β_e of the aircraft. Therefore,

$$\theta_p - \beta_c = -\beta_e . \tag{8}$$

Hence, if we let

$$1 - e^{-\frac{\Delta t}{\tau}} = k, \tag{9}$$

then

$$\left|\theta_p - \theta_p'\right| = \left|-k\beta_e\right|. \tag{10}$$

Differentiating Eq. (7a), we obtain

$$\dot{\theta}_p = -\frac{\beta_e(0)e^{-\frac{t}{\tau}}}{\tau}.$$

Then from Eq. (7b)

$$\dot{\theta}_p = -(\theta_p - \beta_c)/\tau$$

and from Eq. (8)

$$\dot{\theta}_p = \beta_e/\tau \,. \tag{11}$$

Therefore, by substitution into Eq. (5) we obtain

$$F_m = \frac{(\beta_e/\tau) - \dot{\beta}_a}{|k\beta_e|} = \frac{1}{\tau}\left(\frac{\beta_e - \tau\dot{\beta}_a}{|k\beta_e|}\right). \tag{12}$$

Finally, Eq. (1) becomes

$$\dot{C}_e = \frac{1}{\tau n|k|}\left(\frac{\beta_e - \tau\dot{\beta}_a}{|\beta_e|}\right). \tag{13}$$

The constant $1/\tau n|k|$ is calculated as follows: The number of minibeams per beam is $n = \Delta T/\Delta t$. Also $|k| = |1 - e^{-\Delta t/\tau}|$ which, for values of Δt very small compared to τ, leads to $|k| = \Delta t/\tau$.

Therefore

$$\frac{1}{\tau n|k|} = \frac{1}{\tau\left(\frac{\Delta T}{\Delta t}\right)\left(\frac{\Delta t}{\tau}\right)} = \frac{1}{\Delta T}. \tag{14}$$

The general expression for the instantaneous color rate of the beam with respect to the pilot's eye becomes, from Eq. (13),

$$\dot{C}_e = \frac{1}{\Delta T}\left(\frac{\beta_e - \tau\dot{\beta}_a}{|\beta_e|}\right). \tag{15}$$

It is seen from this expression that the instantaneous color rate of the beams of the light pattern with respect to the pilot's eye is a function of both his angular error β_e from glide path and his angular rate $\dot{\beta}_a$ in the beam. In effect the pilot views this instantaneous color rate over a finite time interval and thus perceives a color sequencing ΔC_e. That is, he sees the indicator change color in a sequence where the sequence direction, or order, and the sequence speed are a function of his position and rate in the beam. It is this sequencing information which continuously provides the pilot with a sink rate command appropriate to the present situation of his aircraft in the beam. The color order, or direction of the sequencing, specifies the direction of the commanded sink rate change while the sequence frequency provides information regarding the magnitude of the necessary sink rate change.

From the general expression for $\dot{C}_e$ (Eq. 15), it is apparent that for the pilot flying directly toward the indicator $(\dot{\beta}_a = 0)$ the instantaneous color rate is equal to the reciprocal of the time constant, that is, $\dot{C}_e = \pm 1/\Delta T$. If he continues to fly in this direction for a long enough period of time, he will see the indicator colors sequence at a rate of $\Delta C_e = \pm 1/\Delta T$ per sec. If the aircraft is either above or below glide path $(\beta_e \neq 0)$ but its angular position is being corrected at the commanded rate $(\dot{\beta}_a = \beta_e/\tau)$, then $\dot{C}_e = 0$ and the pilot observes a zero color sequence rate, or constant color. If the aircraft is not flying directly towards the indicator $(\dot{\beta}_a \neq 0)$ but passes through the glide path $(\beta_e = 0)$, the expression for $\dot{C}_e$ indicates that the pilot observes an infinite color rate. In practice, however, this does not occur, for the green on-glide-path beam has a finite width so that the exponential beams never actually become infinitely thin. For this reason, the maximum color rate which can be observed is a function not only of the aircraft's angular error rate in the beam, but also of the angular width of the green beam.

System Improvements Achieved Through Use of Rainbow Display

The fact that the error signal provided by the Rainbow system is color-sequence coded rather than displacement coded alleviates the problem of insufficient display gain, which was analytically determined to be a source of system inaccuracy. Once the pilot is able to discern the colored light, the sensitivity of the displayed error signal is independent of his range from touchdown. In other words, if the light can be detected at all, the gain on the displayed signal, i.e., on the color sequence, is constant for all ranges. For this reason, the usable range of the system is limited only by the intensity of the light source and by meteorological conditions, not by the physical size of the indicator. (It should be pointed out that the error signal developed by the system is dependent on range, that is, is always appropriate for the aircraft's present range. Only the display gain on the error signal is independent of range.)

Even more beneficial than the increase in display gain, however, is the provision by the Rainbow display to the pilot of information concerning his rate of descent rather than his altitude. In servo terminology, then, the Rainbow system incorporates into the display a lead, or quickening term, which reduces the complexity of the control function required of the pilot. (See Refs. 1 and 5.)

Shown in the block diagram of the pilot-aircraft-geometry-Rainbow display system are both the constant display gain and the rate information presented to the pilot (Fig. 5). It can also be seen from this diagram that as the pilot approaches the glide path, thus reducing β_e, the forward loop gain, and thus display sensitivity to error in $\dot{\beta}_a$, is increased. Comparison of this diagram with that of the pilot-aircraft-geometry-FLOLS display system emphasizes these system improvements which result from the introduction of the Rainbow display into the system.

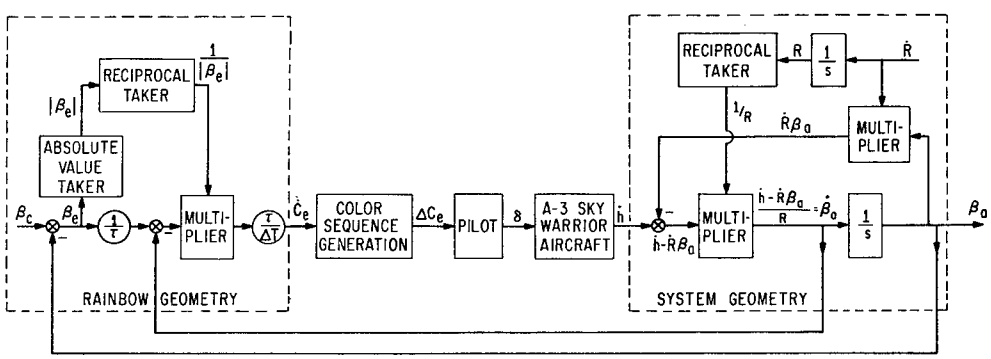

β_c = COMMAND GLIDE PATH ANGLE
β_a = ACTUAL ANGULAR POSITION OF AIRCRAFT
β_e = ANGULAR ERROR OF AIRCRAFT
h = AIRCRAFT ALTITUDE
R = RANGE TO TOUCHDOWN
δ = CONTROL
τ = EXPONENTIAL TIME CONSTANT OF COLORED BEAMS
ΔT = TIME DURATION OF EACH COLORED BEAM
$\dot{C}_e$ = INSTANTANEOUS COLORED BEAM RATE
ΔC_e = COLOR SEQUENCE

Fig. 5 - Block diagram of pilot-aircraft-geometry-Rainbow control loop. For derivation of $\dot{\beta}_a$ relation see Fig. 2.

Rainbow Display Equipment Design Principles

The equipment designed to produce the dynamic array of the Rainbow display system is essentially an optical system requiring no electronic or mechanical sensing of system parameters either aboard the aircraft or at the location of the display. Such sensing devices are unnecessary because the characteristics of the error signal, as developed and observed, are a function of the geometrical relationships inherent in the system.

The Rainbow system utilizes two primary design features, to be discussed in what follows: (a) the principle of the backward projector, where the viewer looks directly into an optical projector rather than at a projected image, and (b) a dynamic color-coded projection object, or slide.

The Principle of the Backward Projector – Consider an ordinary slide projector containing a multicolored slide and focused at optical infinity. To the person standing in the image plane looking directly at the projection lens, the entire lens appears to be a single color. This apparent color of the lens is a function of the position of the viewer's eye in the image plane.

In order to illustrate this principle more specifically, let us consider, for example, the projection of a two-color slide, the top half of which is red, the lower half green (see Fig. 6). It can be seen that if a projection screen were erected in the image plane, the area of the screen around point E_1 would be red, since all the light illuminating this area originates from the red portion of the slide. Furthermore, because only red light strikes this point, to the person with his eye located at E_1 the entire lens will appear red. Likewise, the person whose eye is at point E_2 will see the lens as green since all the light reaching this point is coming from the green sector of the slide. If the eye is very near to the boundary between the two colors, it has to be moved only a short distance for the entire lens to appear to change color.

The utilization of the backward-projector principle in the Rainbow equipment eliminates the necessity for any electronic or mechanical sensing of craft position or movement, because the color signal received by the pilot is inherently a function of his angular position and movement in the projected beam.

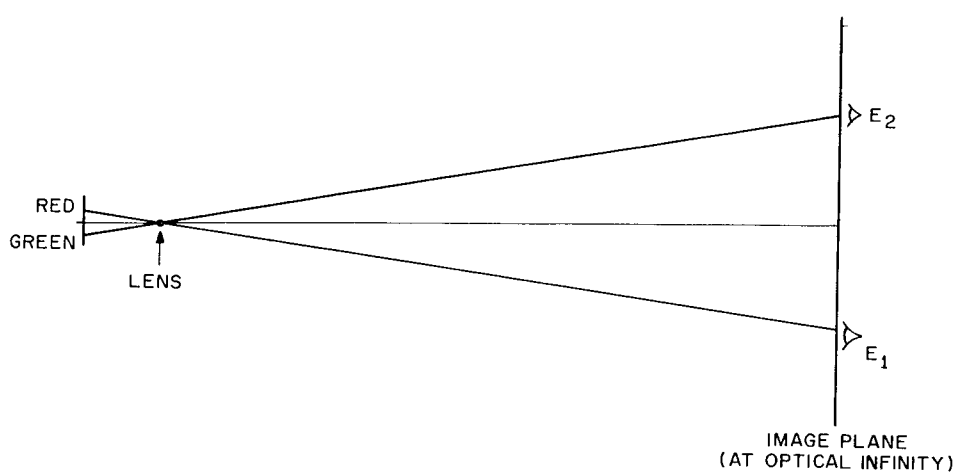

Fig. 6 - Ray diagram of lens projection of two-color slide focused at optical infinity

The Dynamic Color-Coded Slide – The exponentially moving pattern of lights, characteristic of the Rainbow Optical Landing Aid system, is achieved by means of a dynamic multicolored slide. A patterned color transparency is superimposed upon a transparent cylindrical drum. The drum rotates about a high-intensity light source and condensing lens so that the transparency moves in the focal plane of the projecting lens. A schematic representation of the rotating drum and lens system is shown in Fig. 7.

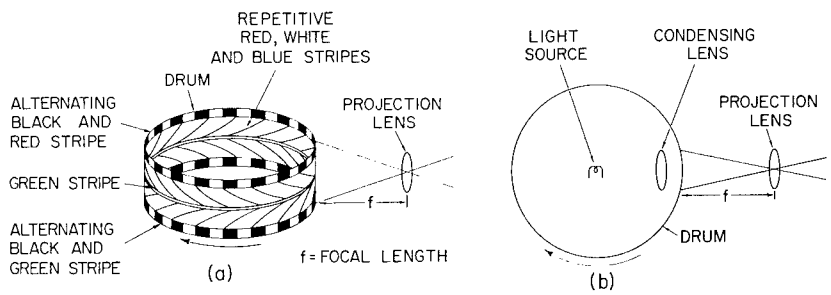

Fig. 7 - Schematic representation of rotating drum and lens system: (a) side view, (b) top view

The pattern superimposed on the drum consists of a continuous cycle of red, white, and blue stripes which approach the center green stripe exponentially. There are also a horizontal, alternating-red-and-black stripe around the top of the drum and a horizontal alternating-green-and-black stripe around the bottom of the drum, which provide the flashing beams. The characteristics of the flashing stripes and the exponential stripes are selected in conjunction with the rotation speed of the drum, the desired time duration of each beam, and other pertinent design parameters to command the aircraft's return to glide path along an exponential path having an appropriate time constant τ and to warn the pilot of dangerously large errors from glide path. (The derivation of the interrelationships among the Rainbow system parameters and the selection of drum parametric values are set forth in NRL Report 6199, "Design Equations for Rainbow Optical Landing Aid," by Carol A. Roberts.) This rotating drum provides the dynamic projected light pattern, discussed in the section on Theory of Operation, which provides the pilot with the capability of making the highly precise approaches required for landing safety.

Experimental Unit

Figure 8 is a set of photographs of the experimental Rainbow units which have undergone preliminary flight testing at Maryland Airport, Pomonkey, Maryland, in order that critical design parameters could be optimized. No quantitative measures of system performance have been taken as yet; however, the qualitative opinion of both civilian and naval aviators who have flown the system has been favorable. Extensive flight testing is planned, following design optimization of the unit. Camera records of flight precision will compare the pilot's performance in using the Rainbow with his performance in using conventional landing aids.

The Rainbow pattern, illuminated by a 1000-watt projection lamp, has been sighted and utilized as far out as 3.5 miles in bright sunlight. This means that the pilot flying his aircraft at 150 kt gets useful control information for about one and a quarter minutes before touchdown, which is ample time to get set up on glide path. The experimental unit has a vertical field of view of 4 degrees above glide path and 2 degrees below glide path, and a lateral field of ±5 degrees.

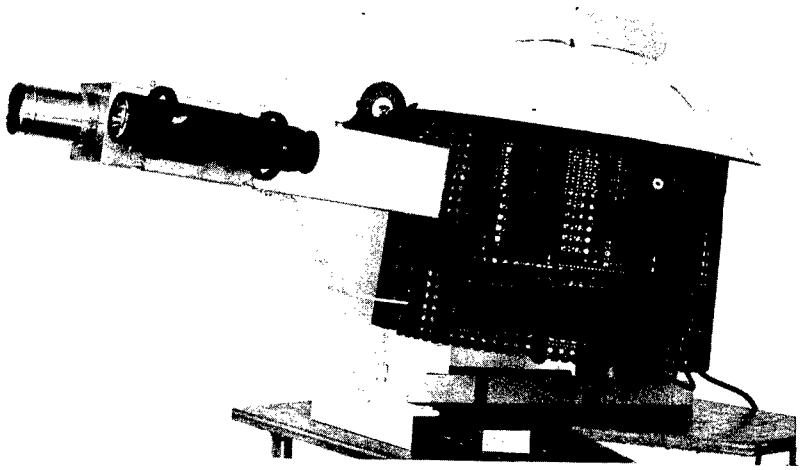

(a)

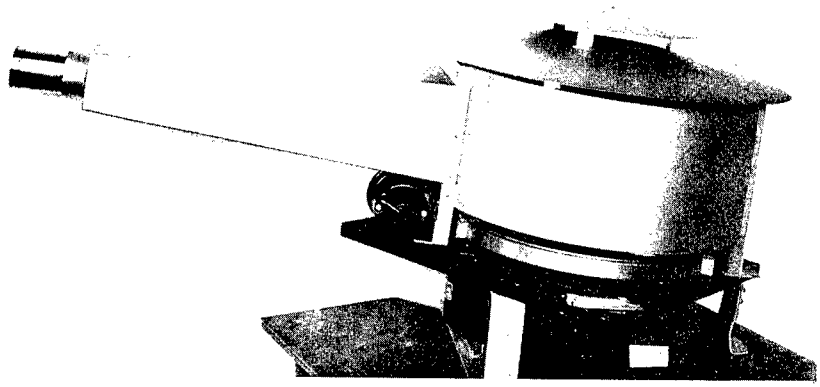

(b)

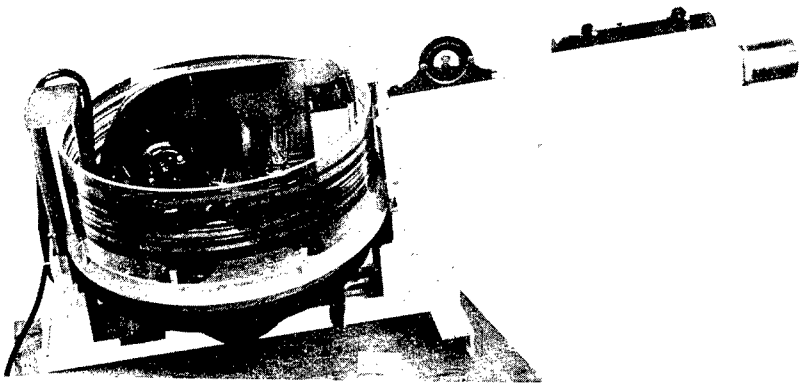

(c)

Fig. 8 - Rainbow Optical Landing Aid experimental units. (a) Preliminary experimental unit showing a telescope mounted on the casing for ground observation of aircraft deviations from the ideal glide path. (b) Modified experimental unit. (c) Preliminary experimental unit with casing removed to reveal color-patterned, transparent, rotating drum which revolves about the light source and condensing lens (see Fig. 7b). In this unit an ordinary Delineascope was used.

The basic color sequence rate was chosen to be 1.5/sec, i.e., the time duration ΔT of each color is 1/1.5 or 2/3 sec, which means that a pilot hovering at a fixed point in space, above or below glide path, would observe the complete three-color sequence once every two seconds. The pilot making his approach, of course, actually observes a color sequence rate depending on the characteristics of his flight path.

In the experimental unit the green on-glide-path indication is ±0.1 degree. This is to say that at a range of 10,000 ft, for example, the pilot receiving the green indication is controlling his craft altitude with a precision of ±17.5 ft, and at a 500-ft range from touchdown, with a precision of ±0.875 ft. Many of the pilots who have flown the Rainbow system have been able, without difficulty, to control their craft so as to observe the green indication for approximately two-thirds of the approach.

For use on carriers, the Rainbow system must, of course, be space stabilized to compensate for the pitch, roll, and heave movements of the ship. The standard stabilization equipment presently used for the FLOLS could be readily adapted for Rainbow use. On the other hand, the unit could be mounted in the deck and the projection of the light pattern into space be accomplished through the use of stabilized mirrors.

SUMMARY

The Rainbow Optical Landing Aid was conceived and developed to increase the precision with which pilots can land high-performance aircraft aboard carriers. From a consideration of the statistical distribution of various critical flight parameters at the time of touchdown, it follows that increased safety can be achieved through reduction of the spread of the distribution of these parameters or, in other words, by increasing the precision with which they are controlled.

In order to determine the optimum means of increasing landing precision, an analysis of the system presently in use, including the aircraft, pilot, and display, was performed using the dynamic characteristics of the FLOLS and the A-3 (Sky Warrior) aircraft. The analysis pinpointed two prime sources of system inaccuracies in the use of the FLOLS. These are (1) insufficient display gain, and (2) the absence of any derivative, or lead, signals in the displayed error indication. The correction of these deficiencies is necessary for acceptable man-machine system stability and response.

To eliminate the above sources of system error, the Rainbow Optical Landing Aid was designed and an experimental unit was constructed. By means of a color-sequence-coded error signal, the pilot receives a command to increase, decrease, or maintain his current sink rate so as to acquire and maintain the prescribed glide path with minimum error. Thus, the Rainbow display provides lead, or derivative, signals with a range-independent high gain. The error signal observed by the pilot is a function of both angular error from glide path and angular rate of the aircraft, and it therefore always provides a command appropriate to the present situation of the aircraft. The display of such an error signal, incorporating lead or error rate, represents the inclusion in the landing-control system of one quickening term, and thus it reduces the difficulty of the control task required of the pilot.

As a result of reducing the pilot's task to one which he can perform with improved accuracy, it is expected that the increase in the precision of parametric control critical to the reduction of the accident rate can be achieved.

ACKNOWLEDGMENTS

The Rainbow Optical Landing Aid is the joint invention of Mr. Henry P. Birmingham, Mr. Alan W. Baldwin, and Miss Barbour Lee Perry. An application for a patent on this invention has been filed.

The inventors have received extremely valuable assistance from the following people: Miss Patricia Griffin, who made important contributions to the design of the rotating drum at an early stage of development and who has continued to participate in this development; Mrs. Ruth Shields, whose competent handling of administrative details and procurement of necessary materials facilitated the development of the experimental unit; Miss Nancy Monacelli, who contributed helpful advice and performed experimental work in the preliminary drafting of the drum pattern and in the selection of colors and paints; Mrs. Carol Roberts, who assisted in the selection of films and colors and who, together with Mr. Fred Smith, derived the equations relating the design parameters of the drum; Mr. Stanley Kozloski, who performed the extreme precision drafting required for experimental drum patterns; and Mr. Vernon P. Robey and Mr. John F. Otto, whose ingenuity in photographic technology is responsible for the final evolution of a precision drum pattern.

Particular appreciation is expressed to Mr. Jack Crawford for extending use of the airstrip and facilities at Maryland Airport, at no cost to the government, during extensive flight testing of the experimental unit.

The author wishes to express appreciation to Mr. Henry P. Birmingham for the many valuable suggestions which he offered with respect to this report.

REFERENCES

1. Perry, B.L., and Birmingham, H.P., "An Analytical Method of Evaluating Flight Control Display Systems," paper presented at 4th National Symposium on Human Factors in Electronics, Washington, D.C., May 2-3, 1963

2. Perry, B.L., "The Computation of Effective Display Sensitivity in Aircraft Landing," NRL Report 6055, Jan. 1964

3. Birmingham, H.P., and Taylor, F.V., "A Human Engineering Approach to the Design of Man-Operated Continuous Control Systems," NRL Report 4333, Apr. 1954

4. Birmingham, H.P., Kahn, A., and Taylor, F.V., "A Demonstration of the Effects of Quickening in Multiple-Coordinate Control Tasks," NRL Report 4380, June 1954

5. Birmingham, H.P., and Taylor, F.V., "Why Quickening Works," NRL Miscellaneous Paper 108, 1958

Security Classification

DOCUMENT CONTROL DATA - R&D

(Security classification of title, body of abstract and indexing annotation must be entered when the overall report is classified)

1. ORIGINATING ACTIVITY *(Corporate author)* U.S. Naval Research Laboratory Washington, D.C. 20390	2a. REPORT SECURITY CLASSIFICATION UNCLASSIFIED 2b. GROUP
3. REPORT TITLE THE RAINBOW OPTICAL LANDING AID	
4. DESCRIPTIVE NOTES *(Type of report and inclusive dates)* An interim report on one phase of the problem.	
5. AUTHOR(S) *(Last name, first name, initial)* Perry, Barbour Lee	

6. REPORT DATE	7a. TOTAL NO. OF PAGES	7b. NO. OF REFS
February 1, 1965	20	5

8a. CONTRACT OR GRANT NO. NRL Problem Y02-21 b. PROJECT NO. RS-11-50-016/652-1/F012-06-02 c. d.	9a. ORIGINATOR'S REPORT NUMBER(S) NRL Report 6184 9b. OTHER REPORT NO(S) *(Any other numbers that may be assigned this report)*
10. AVAILABILITY/LIMITATION NOTICES Unlimited availability – Copies available from OTS – $.50	
11. SUPPLEMENTARY NOTES	12. SPONSORING MILITARY ACTIVITY Dept. of the Navy (Bureau of Naval Weapons)

13. ABSTRACT

This report describes the Rainbow Optical Landing Aid and contains a mathematical analysis of the pilot-aircraft-Rainbow-geometry loop. The analysis underscores the salient characteristics of the Rainbow display which lead to precise, easily controlled landings.

The Rainbow Optical Landing Aid was developed to provide the pilot with quickened glide path information by means of a color-sequence coded signal. A red-white-blue sequence tells the pilot to increase his sink rate; a red-blue-white sequence indicates that a smaller sink rate is required. A steady green informs the pilot that he is within ±0.1 degree of glide path.

Designed for location on the carrier deck, the Rainbow is strictly an optical-geometrical system requiring no electronics or external inputs. The experimental unit has been used at ranges up to 3.5 miles in bright sunlight, weighs less than 50 pounds, and cost less than $1,000.

DD FORM 1 JAN 64 1473

Security Classification

14. KEY WORDS	LINK A ROLE	LINK A WT	LINK B ROLE	LINK B WT	LINK C ROLE	LINK C WT
Landing aids - Optical						
Carrier landings - Equipment						
Projected color display						
Aircraft landings						
Vehicular guidance system						
Rate of descent - Control						
Control system - Quickened						
Error sensitivity - Range independence						
Error sensitivity - Inverse-actual-error dependence						

INSTRUCTIONS

1. ORIGINATING ACTIVITY: Enter the name and address of the contractor, subcontractor, grantee, Department of Defense activity or other organization *(corporate author)* issuing the report.

2a. REPORT SECURITY CLASSIFICATION: Enter the overall security classification of the report. Indicate whether "Restricted Data" is included. Marking is to be in accordance with appropriate security regulations.

2b. GROUP: Automatic downgrading is specified in DoD Directive 5200.10 and Armed Forces Industrial Manual. Enter the group number. Also, when applicable, show that optional markings have been used for Group 3 and Group 4 as authorized.

3. REPORT TITLE: Enter the complete report title in all capital letters. Titles in all cases should be unclassified. If a meaningful title cannot be selected without classification, show title classification in all capitals in parenthesis immediately following the title.

4. DESCRIPTIVE NOTES: If appropriate, enter the type of report, e.g., interim, progress, summary, annual, or final. Give the inclusive dates when a specific reporting period is covered.

5. AUTHOR(S): Enter the name(s) of author(s) as shown on or in the report. Enter last name, first name, middle initial. If military, show rank and branch of service. The name of the principal author is an absolute minimum requirement.

6. REPORT DATE: Enter the date of the report as day, month, year; or month, year. If more than one date appears on the report, use date of publication.

7a. TOTAL NUMBER OF PAGES: The total page count should follow normal pagination procedures, i.e., enter the number of pages containing information.

7b. NUMBER OF REFERENCES: Enter the total number of references cited in the report.

8a. CONTRACT OR GRANT NUMBER: If appropriate, enter the applicable number of the contract or grant under which the report was written.

8b, 8c, & 8d. PROJECT NUMBER: Enter the appropriate military department identification, such as project number, subproject number, system numbers, task number, etc.

9a. ORIGINATOR'S REPORT NUMBER(S): Enter the official report number by which the document will be identified and controlled by the originating activity. This number must be unique to this report.

9b. OTHER REPORT NUMBER(S): If the report has been assigned any other report numbers *(either by the originator or by the sponsor)*, also enter this number(s).

10. AVAILABILITY/LIMITATION NOTICES: Enter any limitations on further dissemination of the report, other than those imposed by security classification, using standard statements such as:

(1) "Qualified requesters may obtain copies of this report from DDC."

(2) "Foreign announcement and dissemination of this report by DDC is not authorized."

(3) "U. S. Government agencies may obtain copies of this report directly from DDC. Other qualified DDC users shall request through _____."

(4) "U. S. military agencies may obtain copies of this report directly from DDC. Other qualified users shall request through _____."

(5) "All distribution of this report is controlled. Qualified DDC users shall request through _____."

If the report has been furnished to the Office of Technical Services, Department of Commerce, for sale to the public, indicate this fact and enter the price, if known.

11. SUPPLEMENTARY NOTES: Use for additional explanatory notes.

12. SPONSORING MILITARY ACTIVITY: Enter the name of the departmental project office or laboratory sponsoring *(paying for)* the research and development. Include address.

13. ABSTRACT: Enter an abstract giving a brief and factual summary of the document indicative of the report, even though it may also appear elsewhere in the body of the technical report. If additional space is required, a continuation sheet shall be attached.

It is highly desirable that the abstract of classified reports be unclassified. Each paragraph of the abstract shall end with an indication of the military security classification of the information in the paragraph, represented as *(TS), (S), (C), or (U)*.

There is no limitation on the length of the abstract. However, the suggested length is from 150 to 225 words.

14. KEY WORDS: Key words are technically meaningful terms or short phrases that characterize a report and may be used as index entries for cataloging the report. Key words must be selected so that no security classification is required. Identifiers, such as equipment model designation, trade name, military project code name, geographic location, may be used as key words but will be followed by an indication of technical context. The assignment of links, roles, and weights is optional.