5503
UNCLASSIFIED

NRL Report 6093

Periodic Variations of the Temperature and Water Currents in the Tongue of the Ocean, Bahamas

DANIEL FRIEDMAN

Sonar Systems Branch
Sound Division

June 8, 1964

U.S. NAVAL RESEARCH LABORATORY
Washington, D.C.

ABSTRACT

A preliminary study was made of the cyclic variations of temperature and current direction at a fixed location in the Tongue of the Ocean, Bahamas, for a time period of 27 hours. An electronic thermometer and a novel current direction meter were developed for this project. The thermometer was essentially an RC phase-shift oscillator using thermistors as the sensitive element controlling the output frequency. To obtain current directions a similar oscillator was used incorporating a capacitor unit controlling the output frequency. A magnet oriented part of the capacitor with the earth's field, and the capacitance varied when capacitor plates were rotated by the external vane. The current had a cyclic variation of about 180 degrees with a time period of about 9-1/2 minutes. The temperature had short-time fluctuations with about the same time period and had long-time fluctuations with a time period of about 2 hours. (Longer time periods were also indicated.) Of significance to the study of sound propagation is the finding that the phases of the periodic temperature fluctuations varied at different depths.

PROBLEM STATUS

This is an interim report; work on this problem is continuing.

AUTHORIZATION

NRL Problem S01-20
BuShips Problem SF 099-03-01-1463

Manuscript submitted March 16, 1964.

PERIODIC VARIATIONS OF THE TEMPERATURE AND WATER CURRENTS IN THE TONGUE OF THE OCEAN, BAHAMAS

INTRODUCTION

Reference 1 points out the need for monitoring and predicting oceanographic environmental conditions in the Tongue of the Ocean (TOTO). The first step toward achieving these objectives is to determine the magnitude of the significant parameters (temperature, salinity, and currents) as a function of depth and time, at a fixed location.

During March 1962, the Navy Oceanographic Office made a preliminary study of the variation of temperature and salinity with respect to time at a fixed location in TOTO. These measurements were made every 3 hours for a period of several days. An analysis of the data obtained, as reported in Ref. 2, indicated large periodic changes in temperature and salinity.

During the second half of 1962, an exploratory instrumentation system was designed and built at NRL. This system was intended to meet the following objectives:

1. Determine if there are short-time variations which the 3-hour sampling rate of the Navy Oceanographic Office would not be able to detect.

2. Determine if there are periodic variations in current direction. The presence of such variations would indicate that the temperature and salinity fluctuations observed were caused by internal waves.

3. Evaluate the novel telemetering and data processing techniques developed at NRL.

This report will concern itself with the results obtained with this platform over a 27-hour period commencing February 1, 1963. The data were taken in water about 1500 meters deep. The geographic location was approximately 77° 30' W, 24° 30' N.

INSTRUMENTATION

Basic Approach

The basic approach decided upon was to use instruments whose output frequency would vary as a known function of the parameter to be measured. Since all the data would be transmitted through a single coaxial cable, each instrument would operate in a separate frequency band. To make use of existing components, the IRIG telemetry subcarrier bands were used.

Since relatively short operating times were required, each instrument package contained its own battery supply. By utilizing the inherent regulation of mercury batteries, no voltage regulator circuits were required.

The system was designed to have as high a reliability and maintainability as possible. The number of components was kept to a minimum. For example, only one type of transistor was used in the entire system: To obtain high stability in the electronic portions of the system, a silicon transistor of high gain (2N2222) was used. The high gain made it possible

to use large amounts of feedback for stabilization purposes. Critical components of the oscillator circuits were constructed with silver-mica capacitors and wire-wound resistors. Silicon transistors were used, since they would be less affected by temperature than germanium transistors.

Temperature

In the development of a temperature sensor, it was decided to use the simplest approach possible, namely an RC phase-shift oscillator using thermistors as the sensitive element. To keep the oscillator stable over the operating temperature range, a resistor stabilizing circuit and a thermistor biasing circuit were used.

To get maximum resolution, each unit was designed to operate over a temperature range of about 10°C. To achieve this range, two thermistor probes were used for each unit. The thermistors had a resistance of about 10,000 ohms and a sensitivity of about 4.37% per °C at 25°C. Each thermistor was enclosed in a metal tube to protect it from the ambient pressure. A test at 3000 psi indicated no pressure effect on thermistor calibration. The resulting oscillator circuits are shown in Fig. 1 and component values are given in Table 1.

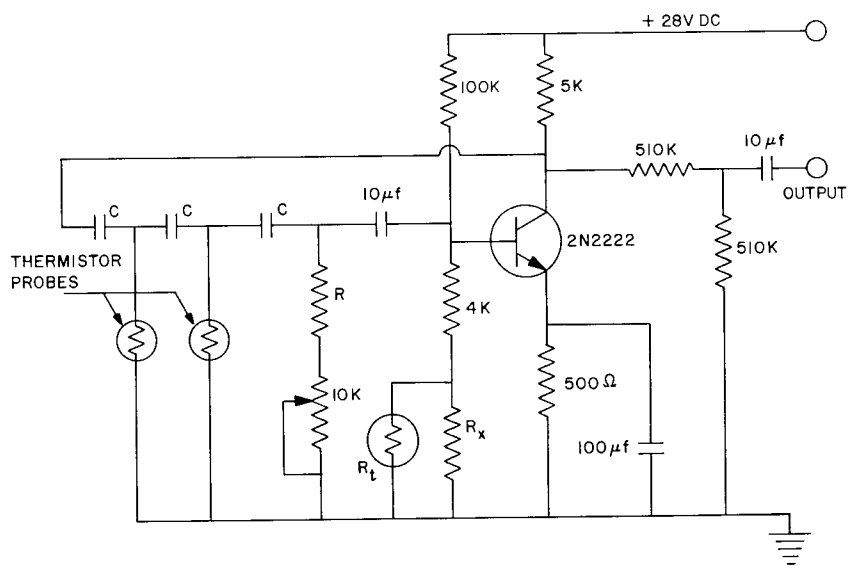

Fig 1 - Oscillator circuit for the temperature sensor
(see Table 1 for numerical values)

To provide enough power to drive the cable and to amplify signals from other sources, each temperature sensor had a single-stage amplifier associated with it (Fig. 2). The maximum open-circuit output was 0.8 volt rms. The current drain of the oscillator and amplifier combined was 2.5 milliamps.

For each of three depths, the oscillator, amplifier, and battery supply were packaged in a 2-inch I.D. stainless steel housing, as shown in Fig. 3.

UNCLASSIFIED

Table 1
Values of Oscillator Components Shown in Fig. 1

Sensor	IRIG Band	Range	R (kilohms)	C (pf)	R_t	R_x
Temperature	2	4 - 12° C	27	3900	Thermistor, 1000 ohms minus 4.47%/°C at 25 °C	Selected to temperature compensate individual units
	3	8 - 16° C	20	4000		
	6	14 - 23° C	18	4000		
Current Direction	4	360° C	-	82		
	5		-	60		

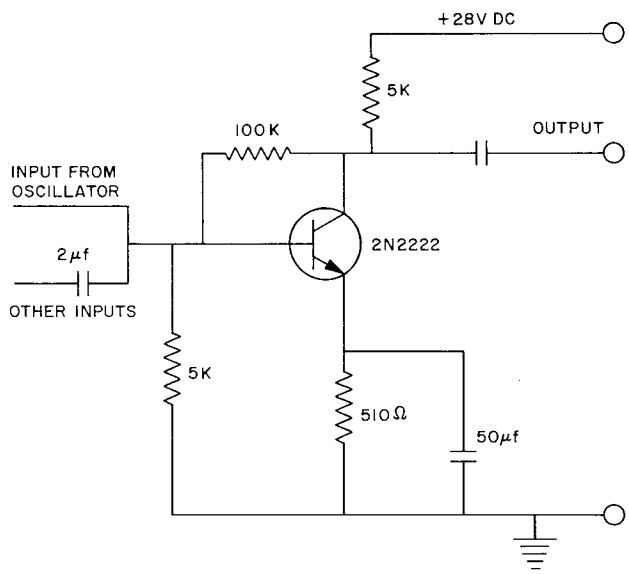

Fig. 2 - Driver amplifier

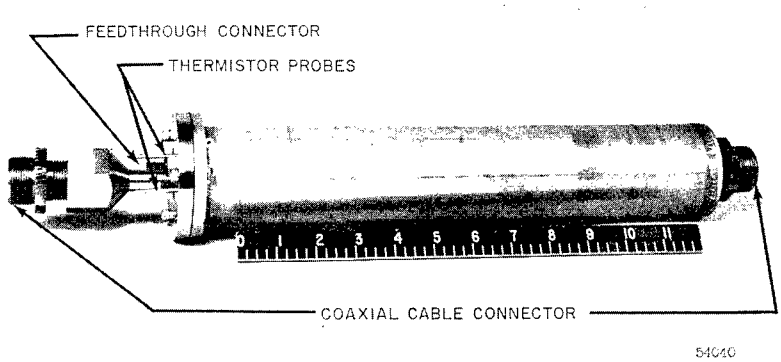

Fig. 3 - Temperature measuring unit

Current Direction

To obtain current direction information via a coaxial cable, an electronic transducer had to be developed which would convert the angle of a vane with respect to magnetic north into frequency information. The basic system developed was as follows.

Two horizontal semicircular capacitor plates were mounted rigidly to the vertical moving vane. A thick semicircular plastic disk, coated with a conducting paint, was placed between the two plates. Rotation of the outer plates with respect to the disk changed the effective capacitance of the unit. By placing the disk on a ball-bearing-mounted shaft and attaching a bar magnet to the shaft to keep the disk aligned with magnetic north, the capacitance of the unit was made into an analog representation of the angle of the vane with respect to magnetic north. For this system, however, a given value of capacitance can occur at two different angles. To resolve this anomaly, a second capacitor was mounted above the first but rotated at a 90-degree angle with respect to the lower capacitor (see Fig. 4). To convert capacitance into frequency, the basic oscillator circuit shown in Fig. 1 was used, but in this case, one of the capacitors marked C was replaced by the capacitor unit just described.

In the mechanical design of the capacitor unit, it was discovered that the spacing between the two plates had to be kept large to allow for misalignment and warping of the disk. This meant that the capacitance of the unit was very small, less than 100 pf. Since the oscillator circuit would not operate into very high impedances, an impedance matching stage was added. The resulting circuit is shown in Fig. 5.

To avoid distortion of the magnetic field, the entire mechanical structure (Fig. 4) was made of aluminum. The capacitor unit pressure housing was designed for and tested at 2000 psi. A novel safety feature was incorporated in the design of the pressure housing. In a number of cases, pressure housings have leaked when submerged at high pressures. When brought to the surface, the high internal pressure has produced a very dangerous condition. To provide pressure bleed-off, rubber gaskets were placed under each bolt. These gaskets also provided electrical insulation between the stainless steel bolts and the aluminum housing and thus prevented the rapid corrosion of the aluminum which would have resulted from the large potential differences between the aluminum and the steel. Figure 6 shows the capacitor unit removed from its pressure housing, and Fig. 7 shows how the electronic circuit card was placed with respect to the capacitor unit.

To transfer the ac signals from the rotatable capacitor unit to a stationary frame, a rotatable transformer was developed. The transformer consisted of two coils of wire wound on polypropylene forms and concentrically mounted. The center coil (300 turns of No. 26 wire) was bolted to the direction vane. The outer coil (950 turns of No. 29 wire) was bolted to the frame. The clearances between the inner and outer coil was about 1/32 inch. The output of the transformer was not significantly affected by immersion in sea water. The outputs of the two oscillator-amplifier units were connected to the center coil by a resistor summing network and the output of the outer coil connected to the amplifier section of a nearby temperature unit. Figures 8 and 9 show the position of the rotatable transformer.

The direction vane was designed with a cylindrical buoyance chamber welded between the vanes in order to make the rotating unit neutrally buoyant. After the units had been constructed, it was discovered that the vane end would have some negative buoyancy in sea water. This meant that any tipping of the axis of revolution would tend to rotate the vane. The unbalance was very slight (several ounces), but it does cast some doubt on the validity of the current direction measurements.

UNCLASSIFIED

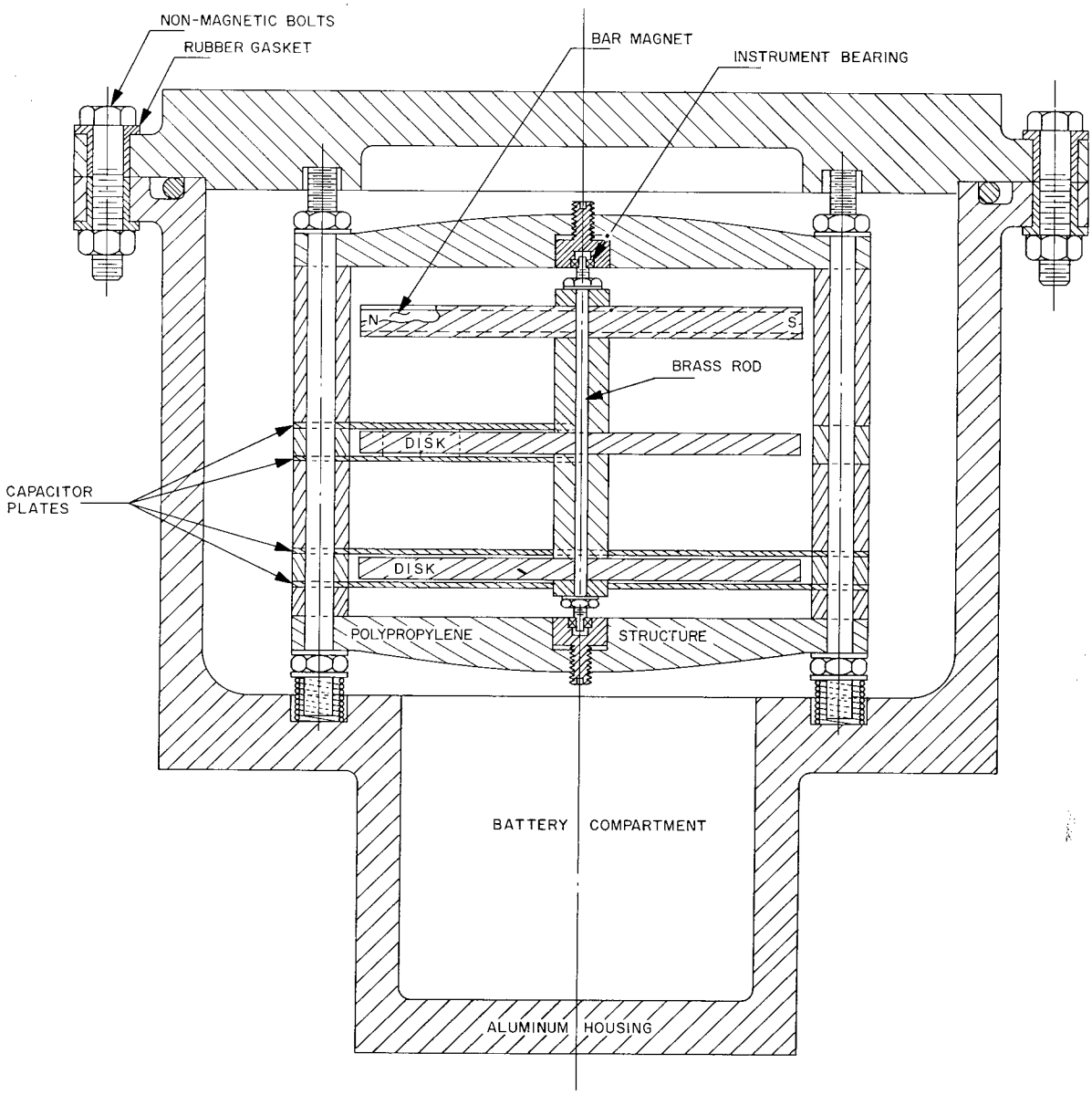

Fig. 4 - Cross section through the capacitor unit of the current direction sensor

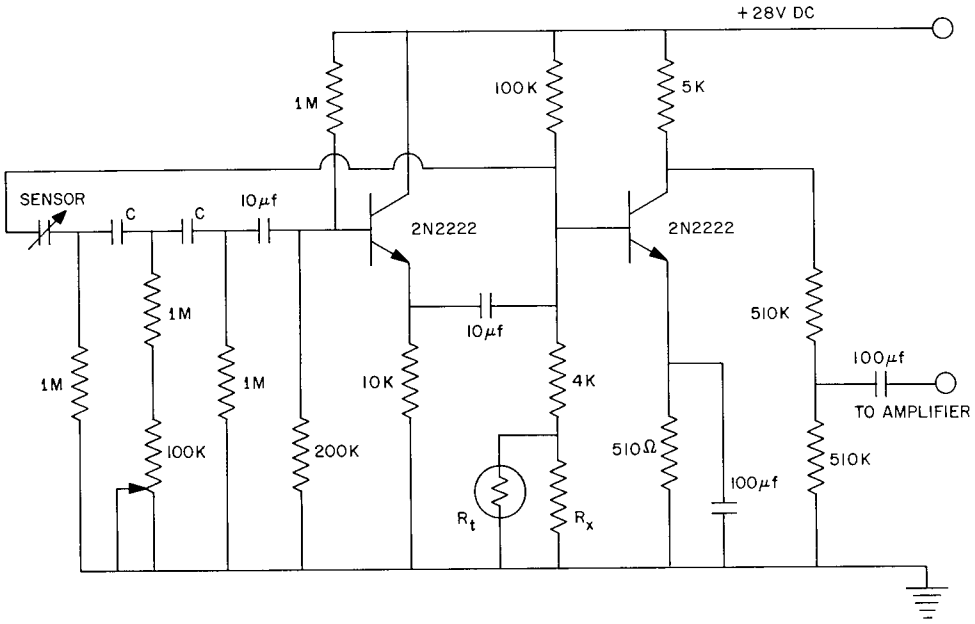

Fig. 5 - Current direction oscillator circuit

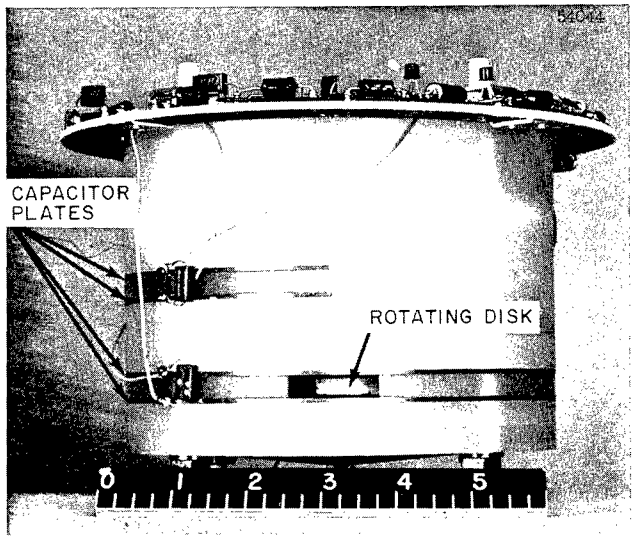

Fig. 6 - Capacitor unit of the current direction sensor

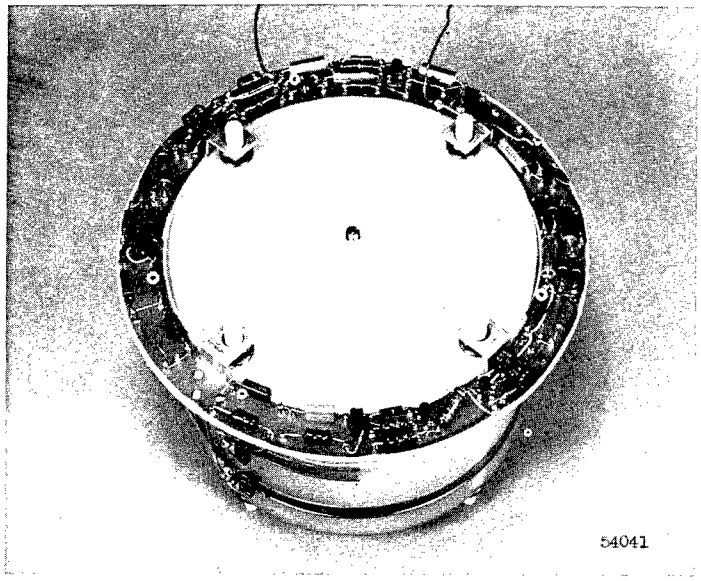

Fig. 7 - Electronic circuit card on top of the capacitor unit

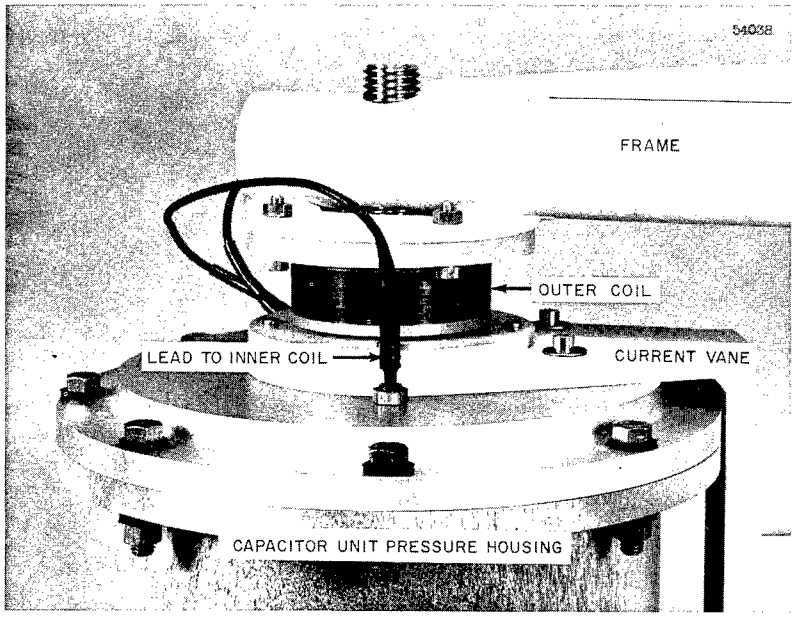

Fig. 8 - Rotatable transformer in place on the current direction sensor

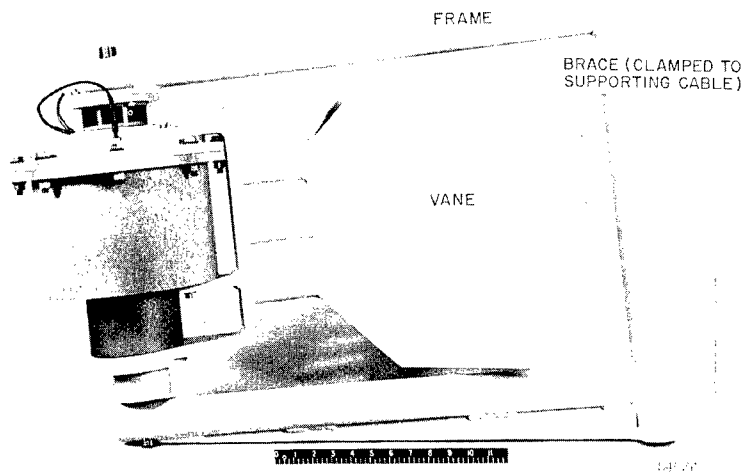

Fig. 9 - Current direction sensor

Assembly

All units were clamped to a cable, which was weighted at one end to keep it vertical. A winch on the deck of the ship was used to raise and lower the entire assembly. Connections between temperature units were made using special coaxial cables and connectors made by the Condex Corporation. The connectors and cable were designed to provide mechanical strength as well as electrical connections.

DISCUSSION OF RESULTS

Current Direction

Figure 10 shows the changes in current direction for a typical 1-hour period. The cyclic variations observed had a time period of about 9-1/2 minutes and a peak-to-peak variation of about 180 degrees. This type of cyclic variation would seem to indicate a seiche-type internal wave.

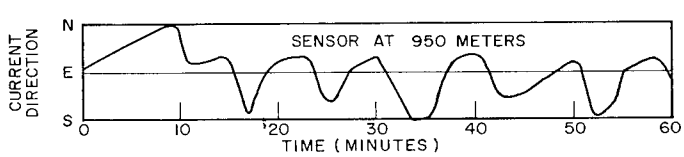

Fig. 10 - Changes in the current direction during a typical 1-hour period

Temperature

Figure 11 shows the short-time temperature fluctuations and Fig. 12 the long-time fluctuations. For comparison purposes, all temperature data is presented as deviation from the mean temperature for each depth instead of absolute temperature readings.

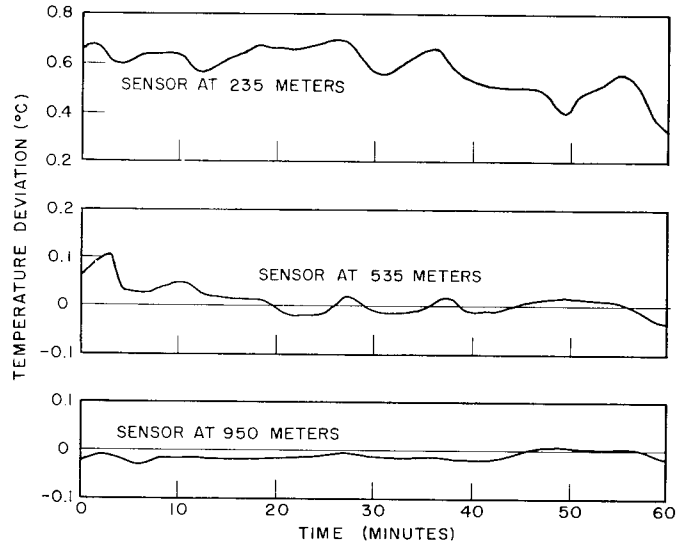

Fig. 11 - Temperature deviation during a typical 1-hour period

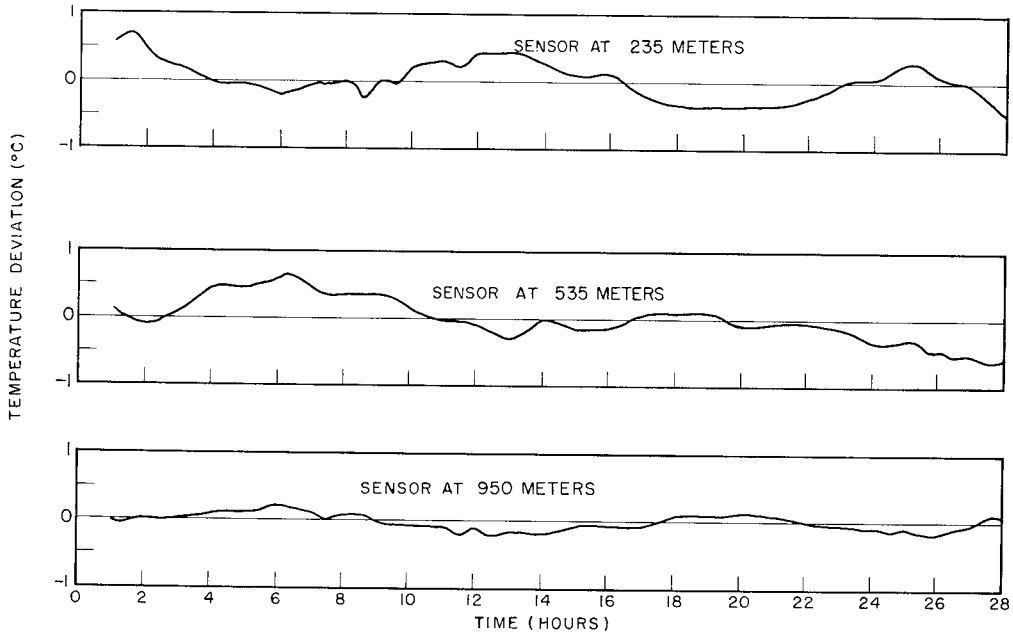

Fig. 12 - Long-time temperature fluctuations

Comparison of Figs. 10 and 11 shows that the cyclic variations of temperature have approximately the same period as the current direction variations. These observations of a 9-1/2-minute period indicate that a 3-hour sampling rate will not provide an adequate picture of the periodic temperature variations in TOTO. Analysis of Fig. 12 indicates a cyclic variation with a time period of about 2 hours. Cyclic variations of longer periods are also indicated, but the limited duration of the test precludes any determination of the period of these variations.

Table 2
Phase Relationships of Cyclic
Temperature Changes

Time (hours)	Magnitude During Cyclic Change		
	At 235 m	At 535 m	At 950 m
6	minimum	maximum	maximum
13	maximum	minimum	minimum
19	minimum	maximum	maximum
25	maximum	-	minimum
28	minimum	minimum	maximum

The data presented in Fig. 12 indicate that the periodic temperature variations at different depths have varying phase relationships. These changes are shown in Table 2. It should be noted that at no time are the cyclic temperature changes at all three depths in phase. This is a very important factor which must be considered in the study of sound propagation to and from bottom mounted equipment.

REFERENCES

1. Buchanan, C.L., Gennari, J.J., Flato, M., and Friedman, D., "Monitoring and Predictions of Oceanographic Environmental Conditions for Acoustic Ranges," Journal of Underwater Acoustics 13(No. 1):145-161 (Jan. 1963)

2. Ridley, E.L., "A Preliminary Study of the Oceanography of the Tongue of the Ocean, Bahamas," Navy Oceanographic Office IMR Report 0-39-62, 1962 (unpublished manuscript)