Ziegler

6450

[redacted]

NRL Report 5628

cy 30

UNCLASSIFIED

THE MAGNEBUOY

A CLASSIFICATION PROBE

[UNCLASSIFIED TITLE]

A. J. Hiller, M. Flato, B. D. Goble,
and K. W. Edinger

Techniques Branch
Sound Division

July 18, 1961

PLEASE RETURN THIS COPY TO:

NAVAL RESEARCH LABORATORY
WASHINGTON, D.C. 20390
ATTN: CODE 2028

Because of our limited supply you are requested to return this copy as soon as it has served your purposes so that it may be made available to others for reference use. Your cooperation will be appreciated.

NDW-NRL - 5070/2035 (10-67)

DECLASSIFIED: By authority of
OPNAVINST 5510.1H, 29 Apr 88
Cite Authority Date
C. Rogers 1221.1
Entered by NRL Code

U. S. NAVAL RESEARCH LABORATORY
Washington, D.C.

[redacted]

APPROVED FOR PUBLIC RELEASE
DISTRIBUTION UNLIMITED

[redacted]

[redacted]

[redacted]

[redacted]

UNCLASSIFIED

CONTENTS

Abstract	ii
Problem Status	ii
Authorization	ii
INTRODUCTION	1
NUCLEAR FREE-PRECESSION MAGNEBUOY	5
Purpose of Magnebuoy	5
Principle of Magnebuoy	7
Description of Magnebuoy Operation	7
Vibrating Reeds	10
RESULTS	10
CONCLUSIONS	13
ACKNOWLEDGMENTS	13
APPENDIX A - Abstract of BuShips Magnebuoy Specifications	14
APPENDIX B - NRL Magnebuoy Engineering Details	16

[redacted]

[redacted]

ABSTRACT

[redacted]

This report summarizes the NRL magnebuoy work from the period of the early feasibility tests of June 1958 to the final tests in July 1960. The magnebuoy has been demonstrated to be a successful short-range classification probe and is now under contract procurement by the Bureau of Ships. The magnebuoy, when dropped within 150 yards of a submarine, will show an anomaly 100 percent of the time. This anomaly corresponds to a change in the earth's magnetic field of 10 gammas or more.

The capability of the magnebuoy as a short-range classification probe for surface-ship use was successfully demonstrated by 40 approaches of the USS ROBINSON (EDE 220) on a slow "creeper" submarine which was tracked by sonar and a simple maneuvering board plot. Of these 40 launchings, the magnebuoy operated successfully 35 times, obtaining 35 submarine anomalies. Air launchings were also successfully demonstrated and indicate the potential of the magnebuoy when used with a target-localizing system such as Loreli.

PROBLEM STATUS

This is a final report on this phase of the problem. Other short-range classification probes are currently being investigated under a new problem (NRL Problem No. 55S05-22).

AUTHORIZATION

NRL Problem S05-10
BuShips Project NE 051-600-47
BuShips No. S-1710

Manuscript submitted April 13, 1961.

[redacted]

[redacted]

UNCLASSIFIED

THE MAGNEBUOY: A CLASSIFICATION PROBE
[Unclassified Title]

INTRODUCTION

The correct classification of a sonar target has been a continuously existing problem. Now that submarines have the capability of launching nuclear missiles and are true submersibles, this nation faces a serious threat from these highly mobile, hidden, underwater missile-launching platforms. In time of war these submarines must be located and destroyed at minimum cost. Antisubmarine-weapon "kill" potential has increased, but the expense of weapons systems and weapons has become very great. Therefore, these weapons cannot be used indiscriminately on all sonar contacts. The correct classification of sonar contacts has now become of still greater importance, since a large indiscriminate expenditure of ASW weapons and effort can affect the national economy appreciably.

During the development of the Loreli project, conducted by the Sound Division at the U.S. Naval Research Laboratory, it became apparent that a classification device could be dropped within less than a hundred yards of a "creeper" submarine. This makes feasible short-range, positive-classification devices. A floating, suspended, magnetic-anomaly detector, called a magnebuoy, would give a positive indication of a magnetic target if placed within effective detection range.

The nuclear free-precession magnetometer which was selected had these advantages over other magnetic detectors: (a) the sensing head required no stabilization or precise orientation and could be operated at great depths; (b) temperature effects were negligible; (c) the signal obtained from the sensing system is an audio-frequency signal which is easily processed and telemetered to a surface vessel or aircraft; and (d) the buoy could be built as a simple, cheap, and expendable device similar to the sonobuoy. Since Varian Associates, Inc., of Palo Alto, California, was the only source of nuclear free-precession magnetometers and the holder of all patents and licenses concerning this equipment, arrangements were made by NRL with Varian to test the magnetometer as a sensing device in the magnebuoy system and to measure the disturbance of the earth's magnetic field by a submarine as it passed the sensing head of the magnetometer at varying distances. (An abstract of the BuShips magnebuoy specifications is given in Appendix A.)

A feasibility test of the Varian Free-Precession Proton Magnetometer was made in Key West, Florida, during June 1958. The V-4900 Station Magnetometer was installed aboard the USS ROCKVILLE (PCR 851) for processing the signal. The sensing head was lowered over the side of an AVR to a depth of approximately 50 feet, while the programmer, preamplifier, and transmitter remained aboard the AVR. The frequency of the detected precession signal was measured by the V-4900 Station Magnetometer, and the variations in magnetic field were recorded on a strip-chart recorder. A submarine was vectored to pass near the magnetometer sensing head on various courses and at various distances. A number of magnetic signatures were obtained with maximum classification ranges as high as 300 yards. A summary of the data obtained is shown in Table 1. The magnetic effect of the AVR and its movement relative to the sensing head was apparent in the magnetometer recording, making interpretations of the submarine signatures more difficult.

[redacted]

Table 1
Magnetometer Feasibility Tests (June 1958)

SS382 Submarine Pass No.	Closest Point of Approach (yards)	Submarine Heading (degrees)	Amplitude of Signature (gammas)	Maximum Detection Range (yards)	Magnetometer Sensitivity (γ full scale)	Average Magnetic Noise Level (gammas)	Submarine Depth (feet)
M121658A	50	180 T	Greater than 200	400	50	±1.7	150 Keel
M121758A	210	270 T	8	210	50	±0.7	Periscope
M121758B	80	180 T	24	200	50	±1.5	150 Keel
M121758C	210	270 T	5	350	50	±0.5	150 Keel
M121758D	90	000	18	300	50	±1.7	150 Keel
M121758E	160	225	16	160	100	±1.5	150 Keel
M121758F	100 SE	Southerly	20	250	50	±1.5	150 Keel
121858A	50 NE	225	Greater than 200	300	100	±1.5	150 Keel
121858B	50	310	70	300	50	±1.0	150 Keel
121858BB	160	090	10	250	50	±0.7	150 Keel
121858C	100	SE	7	250	100	±1.0	Periscope
121858D	340	090	2	Evaluation in Doubt	50	±0.7	150 Keel
121858E	150	090	10	200	50	±1.5	150 Keel

Once the Varian Free-Precession Proton Magnetometer demonstrated the capability of detecting a change in the earth's magnetic field due to the presence of a submarine up to a range of 300 yards, new tests were arranged with Varian Associated, Inc., to build and evaluate a free-floating, self-contained magnebuoy. This magnebuoy contained the associated equipment to transmit the precession signal picked up by the sensing head. These tests were conducted during November 1958 at Key West, Florida. The magnebuoys were lowered over the fantail of the PCR 851, together with a Posit buoy and a distance-measuring-equipment (DME) buoy which were secured to the magnebuoy with short lengths of line. Figure 1 shows a buoy launching party and the magnebuoy floating with attached buoys. In operation, the Posit buoy transponder was used to give sonar location while the DME was used to measure the closest point of approach of the submarine. The range and bearing of the submarine in relation to the magnebuoy were determined by ship's sonar, and the submarine was vectored to pass under the magnebuoy on various courses at a keel depth of 200 feet. The submarine would then echo range on the distance-measuring-equipment buoy and provide closest-point-of-approach information for data evaluation purposes. Precession frequency was telemetered to the PCR 851 via the radio link and processed by Varian V-4900 Station Magnetometers. Two V-4900 Station Magnetometers were installed on the PCR with two radio receivers, providing two independent data processing systems. It was intended that two magnebuoys operating on different telemetering frequencies be put in the water, spaced approximately 1000 to 1500 yards apart so that normal variations in the ambient magnetic field at one buoy could be compared with the magnetic field under the influence of the submarine at the other magnebuoy. Very little data were obtained with two buoys operating simultaneously because of salt-water entry into the buoys.

UNCLASSIFIED

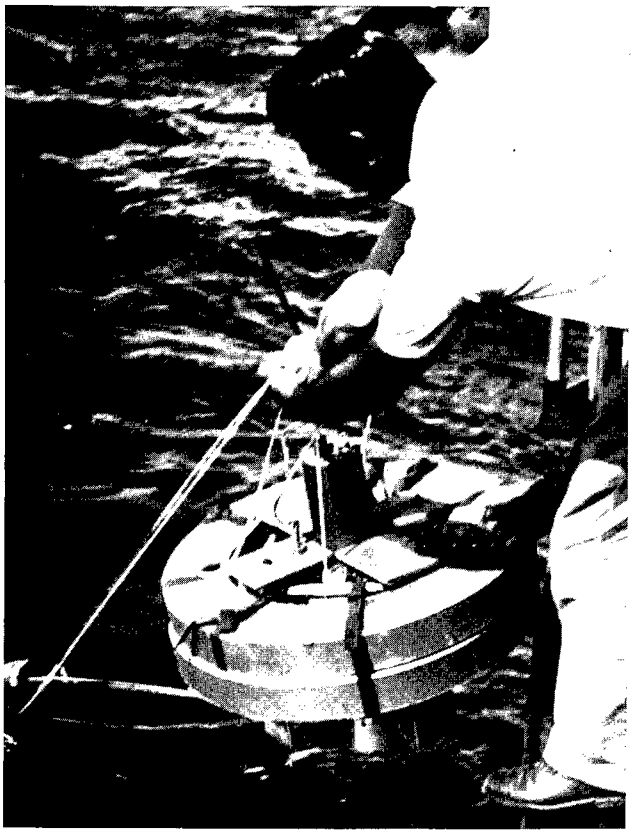

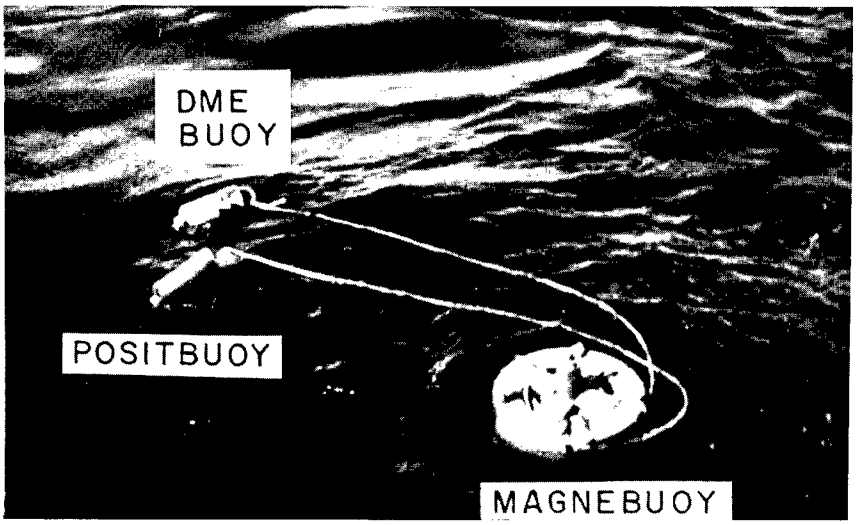

Fig. 1 - The first magnebuoy, together with attached Posit and DME buoys

[redacted]

The dual system data processing proved valuable, however, in evaluating system performance. A magnetic noise level in the absence of the submarine in the order of ±1.5 gammas (1 gamma = 10^{-5} gauss) was encountered. This was comparable to the noise level during the June tests. Since the noise level in the two data processing systems, when both systems were measuring the signal from a single buoy, was comparable and could be correlated to a fraction of a gamma in some cases, it is believed that the magnetic noise was real and not a function of the measuring equipment. At the present time no proven cause can be given for such a high background noise level; therefore, more work should be done in this area. Some of the variations reached a peak amplitude of six gammas with periods of from 8 to 50 seconds. The sea state appeared to contribute somewhat to the magnetic noise level (see Table 2). The possibility of vertical gradients in such deep water (600 fathoms) seems remote, as does the possibility of a magnetic effect due to wave motion since the sensing heads were at a depth of 100 feet. The magnetic noise level can possibly be attributed to spinning or rotation of the sensing heads because of the cable strain member twisting and untwisting. Rotation of the sensing head at a frequency of one cps would introduce a 23.5-gamma error.

Table 2
The First Magnebuoy Data

SS522 Submarine Pass No.	Closest Point of Approach* (yards)	Buoy No.	Submarine Heading (degrees)	Amplitude of Signature (gammas)	Maximum Detection Range (yards)	Magnetometer Sensitivity (γ full scale)	Average Magnetic Noise Level (gammas)
3 December - Sea State 3-							
N120358A	80 West-D	9	340	57	200	100	±2.5
N120358B	130 South-D	9	270	7	200	100	±2.5
N120358C	240	9	SW		Not detected	100	±2.5
N120358D	60 West-D	9	045	122	150	100	±2.5
N120358E	60 D	9	300	86	150	100	±2.5
8 December - Sea State 1+							
N120858A	60 South-D	7	070	65	250	100	±1.5
N120858B	75 East-D	7	210	85	200	100	±1.5
N120858C	150 D	7	045	8	300	100	±1.5
N120858D	150 D	7	200	8	300	100	±1.5
N120858E	45 D	7	000	250+	150	100	±1.5
9 December - Sea State 1							
N120958A	Less than 200	7	No Data	250+	200	100	±1.0
N120958B	Less than 200	13	No Data	20	150	100	±1.0
N120958C	Less than 200	13	No Data	57	150	100	±1.0
N120958D	50 S	13	No Data	250+	300	100	±1.0
N120958E	100 S	13	090	140	300	50	±1.0
10 December - Sea State 2							
N121058A	100 D	13	290	175	300	100	±1.5
N121058B	50 S	13	065	250	250	100	±1.5
N121058C	100 S	13	215	60	200	100	±1.5
N121058D	100 S	7	140	250+	400	100	±1.5
N121058E	100 S	7	280	250+	200	100	±1.5
N121058F	100 S	7	075	45	200	100	±1.5
N121058G	100 S	7	310	250+	250	100	±1.5
N121058H	Less than 50	7	175	250+	400	100	±1.5

*D denotes C.P.A. Evaluation from DME on Sub.
S denotes C.P.A. Evaluation from PCR851 Sonar.

UNCLASSIFIED

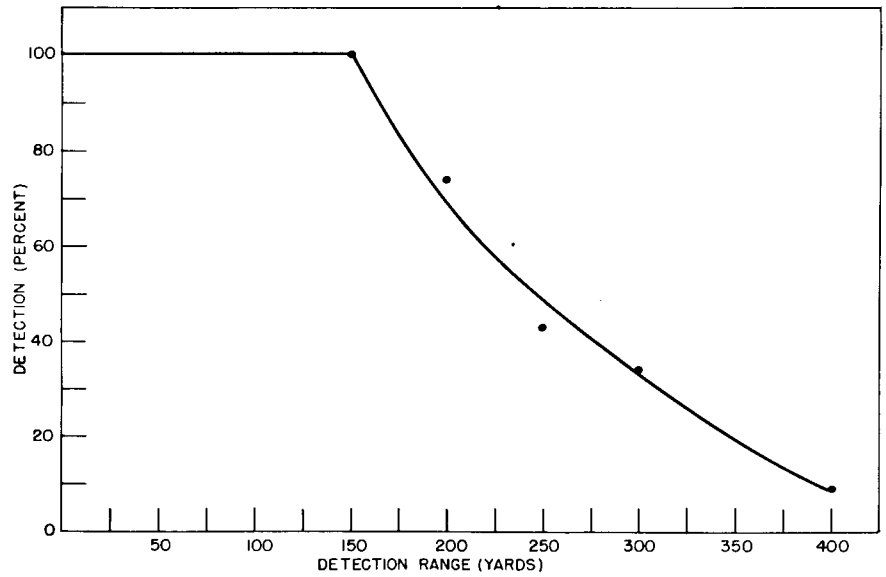

Fig. 2 - Magnebuoy submarine detection capabilities (in percent) versus detection range

Data obtained from the tests are shown in Table 2. Twenty-three passes of the submarine were recorded and evaluated for maximum detection range, amplitude of anomaly, and signal-to-noise ratio. It was determined that the SS522 was detectable on eight percent of the passes at a range of 400 yards, 45 percent at 250 yards, and 100 percent at 150 yards (Fig. 2). The maximum detection range was taken as the point on the anomaly where an experienced magnetometer operator could discern the anomaly, knowing that the submarine was approaching the magnebuoy.

The successful results of these feasibility tests, as reported by Varian Associated, Inc., in "Magnebuoy Feasibility Study, Final Report" (March 1959), showed that a magnebuoy concept offered promise as a positive-classification probe. The magnebuoy was then packaged by NRL as an experimental prototype. The remainder of this report is devoted to this NRL magnebuoy.

Field tests were conducted during the months of July 1959 and July 1960 in Key West, Florida, to collect additional data and demonstrate the feasibility of using the magnebuoy in submarine attack exercises for classification. The "Results" section of the present report contains the successful results obtained using the magnebuoy as a classification probe, both air and surface-ship launched. Figure 3 shows the magnebuoy attached to a helicopter for launching, and Fig. 4 shows the launching of the magnebuoy from a surface ship.

NUCLEAR FREE-PRECESSION MAGNEBUOY

Purpose of Magnebuoy

The purpose of the NRL nuclear free-precession experimental magnebuoy was to obtain data and determine the feasibility of its use as a short-range classification probe

Fig. 3 - Magnebuoy attached to helicopter for launching

Fig. 4 - Magnebuoy launching from a surface ship

[redacted]

UNCLASSIFIED

for ASW vessels and aircraft. The magnebuoy and its associated processing equipment are capable of measuring a change in the absolute value of the earth's magnetic field such as occurs when a submarine moves in its environment.

Principle of Magnebuoy

It has been proven for some time that certain nuclei possess magnetic moments and angular moments. These nuclei can be made to precess at frequencies directly proportional to their environmental magnetic field strength. It has been found that hydrogen nuclei, found in all hydrocarbons and most abundantly in kerosene, will precess at approximately 2000 cycles per second in a magnetic field of approximately 0.5 gauss. The relation between magnetic field and precession frequency for hydrogen nuclei has been determined by the National Bureau of Standards to be $H_g = 0.234868F$, or $F = 4257.8H_g$ where F is the frequency in cycles and H_g is the magnetic field in gauss.

Due to the random orientation of nuclei in a normal body of kerosene, no detectable precession can be obtained in the earth's magnetic field. It is first necessary to polarize the kerosene, so that when the hydrogen nuclei precess, a sufficient number will be precessing together to induce a detectable signal in a sensing coil. In the magnebuoy this is accomplished by applying a polarizing magnetic field, approximately 100 gauss, to a sample bottle of kerosene (the sensing head). This polarizing field is applied for a period of two seconds and then is abruptly removed. During this polarizing time, the magnetic moments of a certain percentage of these nuclei are aligned with the applied magnetic field. Abrupt removal of this magnetic field allows the nuclei to precess freely in the earth's magnetic field. As described above, they will precess at a frequency which is directly proportional to the absolute magnetic field. The precession signal, picked up by the same coil which produced the polarizing magnetic field, is applied to the input terminals of a high-gain bandpass amplifier. This amplified signal is then transmitted to an ASW vessel or aircraft for processing.

The precession frequency will change as a function of temperature by less than one part in three million for a $100^{\circ}C$ temperature change. Under the conditions for the present use of the magnebuoy, the precession frequency can be stated as being independent of the temperature. It might be noted that the precession frequency will not change for different orientations of the sensing coil but the amplitude of the precessing signal will vary with orientation. Since the magnetic field constant, 0.234868, is known to be accurate to one part in 40,000, the absolute sensitivity is therefore one part in 40,000. The earth's magnetic field varies in different locations, from approximately 0.22 to 0.75 oersteds. This is representative of precession frequencies ranging from 935 cps to 3190 cps in different locations on the earth. These frequencies would be obtained using the magnebuoy in different areas of the earth's surface.

Description of Magnebuoy Operation

The NRL experimental magnebuoy is shown in Fig. 5. It can be dropped from a helicopter flying at 60 knots and at an altitude of 150 feet, or it can be dropped over the side of a vessel. It is constructed in the form of a cylinder housing electronics, batteries, and a sensing head at the end of a cable 50 feet long. The sensing head and coiled cable are in a dispenser for ease of handling the magnebuoy. Upon entry into the water, a retaining cap for the sensing head is shattered, allowing the sensing head to sink to a depth determined by the length of the cable. Upon immersion, a salt-water switch activates a relay, which turns on the power to the magnebuoy programmer, amplifiers, and transmitter. A more complete discussion of the magnebuoy and shipboard electronics and magnebuoy structure is given in Appendix B.

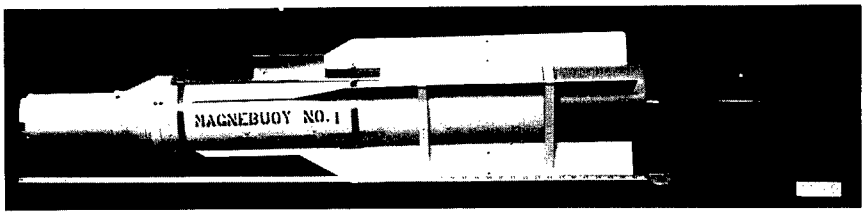

Fig. 5 - The final magnebuoy

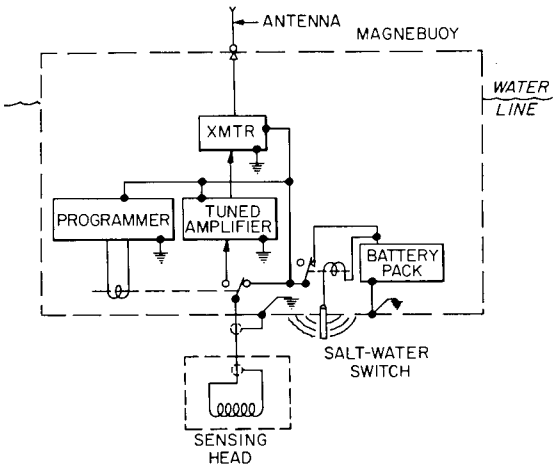

Fig. 6 - Operational block diagram of magnebuoy

Figure 6 shows an operational block diagram of the magnebuoy's operation. The programmer is a bistable multivibrator which activates the switching relay for approximately two seconds of polarizing time, then deactivates the relay for approximately two seconds of receiving time. This sequence is repeated automatically. The function of the switching relay is to connect the coil of the sensing head to the polarizing power supply during the polarizing time and to the amplifier during the receiving time. During the polarizing time, a current of approximately five amperes passes through the coil in the sensing head, creating a magnetic field of about 100 gauss within the coil. At the end of the polarizing time, this current is abruptly halted, and the sensing head is connected to the amplifiers. Due to the precession of the hydrogen nuclei during the ensuing time interval (receiving time), a signal on the order of a few microvolts is induced in the sensing coil. At the end of the receiving time, the sensing head is again connected to the polarizing power supply, and the sequencing is repeated. The signal induced in the sensing head during the receiving time is amplified by a bandpass amplifier tuned to the approximate precession frequency (based on geographic location) and then is coupled to the FM transmitter. An FM receiver on the ASW vessel or aircraft then sends the demodulated signal (precession) to the processing equipment.

Frequency measurement of the precession signal may be accomplished in many ways, but the principle methods employed with the magnebuoy were a Varian V-4900 Station Magnetometer, a variable tuned frequency discriminator, and a vibrating reed display (Fig. 7). The Station Magnetometer uses counting techniques to determine the precession

UNCLASSIFIED

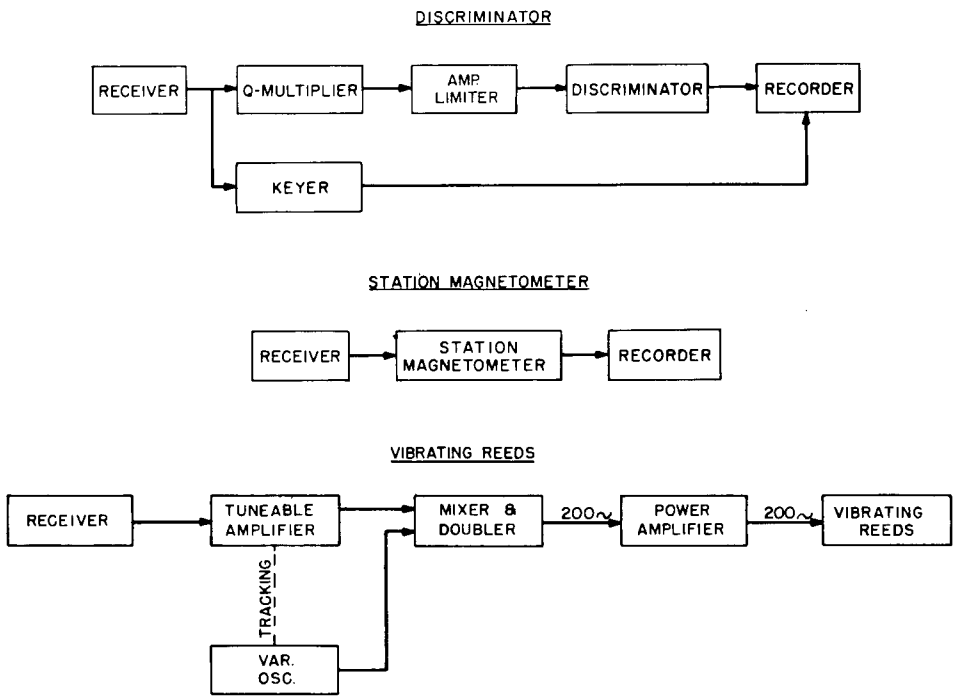

Fig. 7 - Block diagrams of magnebuoy signal processing

frequency during each receiving interval. The count was converted to analog information on a pen recorder, on which the magnetic anomaly was registered. The sensitivity of the frequency counter was usually adjusted such that a 100-line strip chart had each line equal to 0.2 gamma.

The variable tuned frequency-discriminator system consists of a variable-bandwidth, tunable amplifier (Q-Multiplier), a limiter, a frequency discriminator tunable over the expected frequency, a strip-chart recorder, and a keyer. In operation, the received transmission of both polarizing time and receiving time is always conducted through the system to the recorder. The strip-chart recorder arm is able to move only during the receiving time and is controllable in duration by a keyer which functions once for each precessing signal. The time duration of the keyer is approximately 250 milliseconds, beginning at the start of the receiving time. This is so that the arm will not move unless the precessing frequency changes. The frequency-discriminator output, recorded on a 100-line strip-chart recorder, was set to have each line represent a 1.0-gamma change.

The vibrating reed display consists of a tunable amplifier tracking with a tunable oscillator which puts out a frequency 100 cycles higher than the precessing signal; a mixer and frequency doubler; a filter amplifier; and vibrating reeds centered at 200 cycles. This is a visual display that causes the reeds to vibrate at a beat-down frequency of the precession signal (Fig. 8). It is possible to observe a change in frequency of 0.85 cycles on the vibrating reeds, corresponding to a 10-gamma change due to frequency doubling.

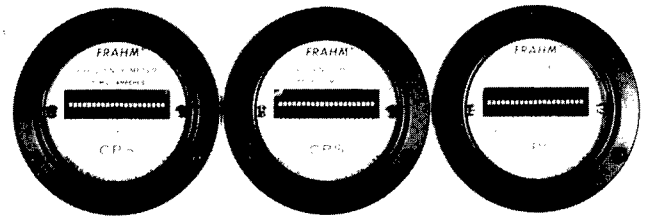

Fig. 8 - Vibrating reed display

Vibrating Reeds

The vibrating reeds are standard packaged Frahm Frequency Meters (Fig. 8). There are three of these grouped units with 21 vibrating reeds in each group. The three groups are connected electrically in parallel and aligned to observe increasing frequency from left to right. The first one ranges in frequency from 155 to 195 cps with a vibrating reed every two cycles. The middle group ranges in frequency from 195 to 205 cps with a vibrating reed every one-half cycle. The last group ranges in frequency from 205 cps to 245 cps with a vibrating reed every two cycles. By centering in the middle group of reeds, one can observe a change in frequency of one-half cycle, equivalent to approximately a 6-gamma change.

RESULTS

The NRL experimental magnebuoy was successfully demonstrated as a short-range positive-classification probe during field trials conducted off Key West, Florida, during the months of July 1959 and July 1960.

Two types of magnebuoy launchings were made: air launchings from a 60-knot helicopter at an altitude of 150 feet, and surface launchings from a 15-knot DE. During the last week's operation in July 1959 40 drops were surface-launched from the destroyer escort USS ROBINSON. On 35 of these the magnebuoy transmitted precession signals which were recorded, obtaining the submarine signatures. The data, Figs. 9 and 10, verify the fact that a surface vessel could launch a magnebuoy over a slowly moving submarine with a high probability of magnetic anomaly detection at close range. In July 1960, the feasibility of the air-launched magnebuoy was demonstrated.

Aboard the ASW vessel three systems were tried. One was the frequency-discriminator system, another was the frequency-counter system (Varian Magnetometer Station Equipment), and the last was the vibrating reed system. The results of the frequency discriminator were very good, clearly showing a two-gamma change in the earth's magnetic field. The recordings were very easy to read and to determine the time of the closest point of approach (C.P.A.) that the submarine made to the magnebuoy. The sensitivity of the Varian Magnetometer Station Equipment was such that a 0.2-gamma change in the earth's magnetic field could be detected. The recordings which were made gave good indications of changes in the earth's magnetic field, but at times it was more difficult to interpret the time of the C.P.A. The vibrating reed display could easily be read with a change of 10 gammas or

UNCLASSIFIED

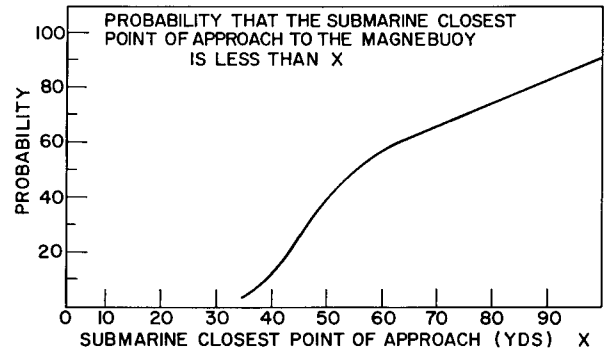

Fig. 9 - Probability of closest point of approach with surface-launched magnebuoy

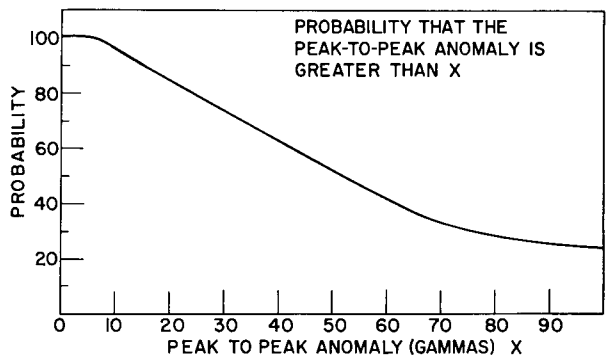

Fig. 10 - Probability of obtaining a definite anomaly when dropping a magnebuoy next to a submarine from a surface vessel

more in the earth's magnetic field. During the earth's magnetic field changes of 10 to 20 gammas, the detection of the time that the C.P.A. occurred was not as easily determinable as when using the frequency-discriminator recordings.

The greatest distance at which the magnebuoy system was able to obtain a signature was from a loaded tanker at approximately 800 yards. The greatest distance that a submarine left a signature was at approximately 500 yards.

Figure 11 shows a discriminator-processing recorded anomaly of a submarine passing a surface-launched magnebuoy. The submarine was of the Balao class at a depth of 150 feet and moved by the magnebuoy at three knots, passing at a range where the closest point of approach was 100 yards. As can be seen from the chart, this caused a peak-to-peak anomaly of around 26 gammas. Figure 12 shows a frequency-discriminator recorded anomaly of a submarine passing a helicopter-dropped magnebuoy. This chart also shows the variations of the vibrating reeds as they were observed at indicated times. Figure 13 shows peak-to-peak anomalies measured in gammas versus the closest point of approach of a Balao class submarine as compiled from the test data.

The transmission of the magnebuoy can be received with a usable signal strength at a range of 5000 yards aboard a surface vessel with an omnidirectional receiving antenna 25 feet above the surface of the water. This magnebuoy has a useful operating time of about 20 minutes and can be recharged after each use. The sensing-head release and cable unreeling are virtually free from entangling (which caused 3.4 percent of magnebuoy failures) when the cable is properly coiled and inserted into its cone-shaped container with the sensing head. A dependable device for releasing the sensing head from the cone-shaped container was the Lucite plate, which shattered on impact.

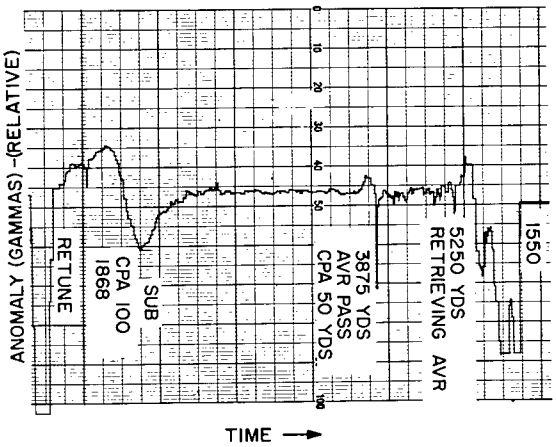

Fig. 11 - Recording obtained of a surface-launched magnebuoy processed by the variable frequency discriminator

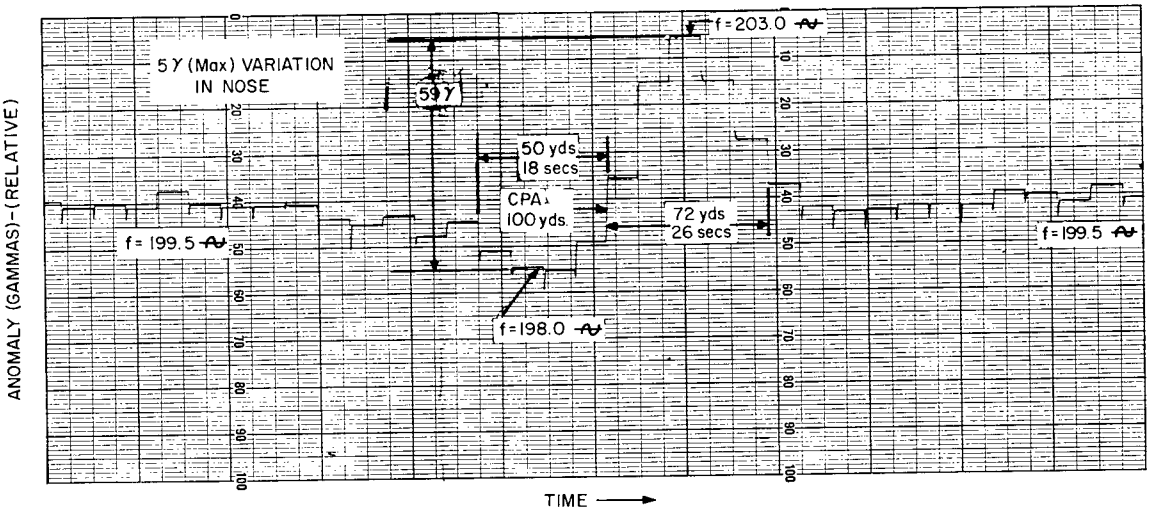

Fig. 12 - Recording obtained of a helicopter-launched magnebuoy processed by the variable frequency discriminator

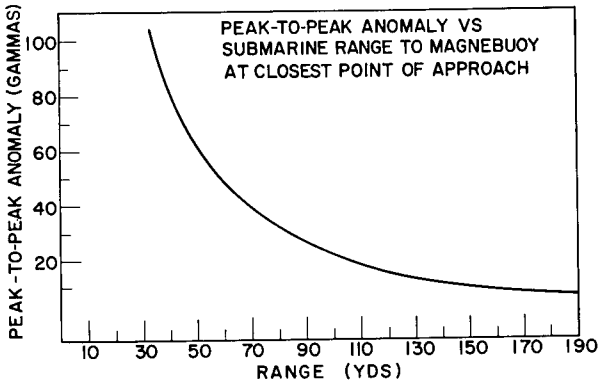

Fig. 13 - Recorded anomalies versus submarine range

[redacted]

UNCLASSIFIED

CONCLUSIONS

This NRL experimental magnebuoy has been successfully demonstrated to be an effective short-range classification probe for air or surface-ship use.

Valuable information has been obtained from these experimental magnebuoys during operational drops and have been included in the specifications of the construction of a prototype by Varian Associates, Inc., Palo Alto, California. The abstract of BUSHIPS Magnebuoy Specifications is included in Appendix A.

It has been shown that the magnebuoy's precessing signal can be processed in other ways than those using a station magnetometer. These processing systems have their limitations and advantages along with the lower costs involved.

ACKNOWLEDGMENTS

The engineering and technical services of J. E. Roberson, B. J. Culverhouse, F. R. Alexander, A. D. Swanson, and L. G. Galli of the Techniques Branch, Sound Division, U.S. Naval Research Laboratory, were invaluable to the successful completion of this task. The help in providing joint services and field services by the Research Systems Section of the Techniques Branch is gratefully acknowledged. Varian Associates provided technical effort of great value to the magnebuoy field trials.

Our special acknowledgment is to Dr. Raymond Waddell (now at NASA) for his original concept of a buoy magnetometer suggested in the Harbor Defense Bulletin of March 1955.

* * *

APPENDIX A

ABSTRACT OF BUSHIPS MAGNEBUOY SPECIFICATIONS

This specification covers the general design, performance, and construction requirements of a service test model of:

1. Recoverable, proton free-precession-type magnetometer buoy capable of being launched from aboard ship or of being dropped from a helicopter.

2. Shipboard equipment to process information received from the magnetometer. This equipment shall consist of the airborne data reducer developed for the Bureau of Weapons and modified for shipboard use.

The magnebuoy equipment shall operate with specified performance in sea water over the temperature range of 0^0 to 30^0C. Maximum ambient temperatures for the nonoperating condition shall be limited to extreme of -62^0 and $+75^0$C. Prior to launching, sufficient time shall be allowed to stabilize the temperature of the magnebuoy between the limits of -20^0 and $+35^0$C.

The magnebuoy equipment shall be designed to operate from a self-contained battery power supply. A socket shall be provided as a means of connecting the equipment to an external power supply for bench testing. The battery power supply shall have a minimum continuous life of 10 minutes when the equipment is operated in sea water having a temperature range of 0^0 to 30^0C.

The magnebuoy electronic units shall be enclosed in a water-tight section. With a vacuum of 10 inches of mercury applied, the section shall not leak at a rate exceeding 2 inches in 2 minutes. The water integrity shall be obtained without the use of cements or adhesives.

The shipboard equipment shall be fully operable within 3 minutes after the main power is turned on. The equipment shall operate with specified performance under sea conditions up to sea state 5 (International Scale) and Beaufort Wind Force 5. The magnebuoy shall be fully operable within 10 seconds after submergence in sea water.

The radio receiver used with the magnebuoy system will be government-furnished.

Buoy - The buoy shall pass through a right circular cylinder having an inside diameter of 4-15/16 inches and a length of 4 feet. No force other than that of gravity shall be required to affect the buoy's passage when the test cylinder is placed in a vertical position. The length of the buoy shall not exceed 36 inches unless approved by Bureau of Ships. The buoy shall be recoverable and shall be capable of being dropped from a helicopter and shall be able to withstand the impact of being dropped into sea water from a height of 150 feet (speed of helicopter: 150 knots) or from a height of 500 feet and above (speed of aircraft: 250 knots).

Descent-Slowing Mechanism - A descent-slowing mechanism capable of slowing the descent of the buoy when launched shall be provided.

UNCLASSIFIED

Freeboard - The buoy shall have a freeboard of 4 inches in sea water at sea state 0 (International Scale), measured from the water line to the antenna deck of the buoy.

Scuttling - Provisions shall be made for automatically scuttling the buoy after 8 hours and not more than 24 hours of immersion in sea water within a temperature range of 0° to 30°C.

Magnetometer Sensing Head and Length of Cable - The magnetometer sensing head and length of cable shall be packaged in a container which shall be released from the buoy and submerge on impact with the sea water. The cable shall be watertight and shall be 150 feet in length.

Audio Amplifier - The audio amplifier shall receive the signals from the sensing head and amplify them to a sufficient level to be transmitted. The audio amplifier will be tuned to any proton precession frequency encountered throughout the world by means of a multiposition tuning switch. Each tuning position will correspond to a magnetic range of approximately 10,000 gammas (1 gamma = 10^{-5} gauss) and sufficient overlap or ranges will be allowed to permit presetting of tuning switch well in advance of use.

Programmer - The programmer shall establish the repetition rate of the magnebuoy and alternately switch the polarizing current and amplifier to the sensing head.

FM Transmitter - The FM transmitter shall transmit the amplified audio-frequency signals by means of a vhf antenna. The transmitter shall deliver a power output of at least 0.25 watt to the antenna under conditions specified herein. The radio-frequency carrier shall be frequency-modulated by the audio-frequency signals.

Antenna - A vhf antenna shall be provided. The antenna shall be stored within the buoy and shall be automatically erected within 10 seconds after water entry. The transmitted FM signals shall be capable of being intelligently received at a range of at least 3000 yards by the shipboard equipment.

Frequency - The transmitter shall operate on a preselected sonobuoy frequency. Provisions shall be made so that any sonobuoy frequency can be selected at the factory or in a repair facility.

Battery Pack - The batteries contained in the battery pack shall be easily replaceable or rechargeable.

Shipboard Magnetometer - The shipboard magnetometer shall receive and reduce the data transmitted via the radio link from the buoy.

Strip Chart Recorder - The reduced data shall be displayed on a strip chart recorder.

Operational tests under service conditions shall be performed aboard a Naval ship. These tests will be of a scope considered necessary to determine full conformance with the requirements of this specification.

* * *

APPENDIX B

NRL MAGNEBUOY ENGINEERING DETAILS

MAGNEBUOY ELECTRONICS

Frequency-Modulated Transmitter

The FM transmitter used in the magnebuoy was taken from an SSQ-2B sonobuoy. The electronics for the transmitter and modulator are housed in the top deck, and the modulator-amplifier is located just below. (See Figs. B1 and B2 for schematics of both units.) The theory of operation of the transmitter is extracted from a Maintenance Instruction Handbook of the listening sonobuoy AN/SSQ-2B (AN16-30 SSQ2-23).

The modulator-amplifier is located just below the transmitter deck. This transistor amplifier consists of one stage, employing a 2N186A transistor. An input transformer, UTC SO-7, matches the impedance of the programmer-amplifier to the transistor, and the output transformer, UTC SO-3, matches the impedance of the transistor to the modulator. The amplifier gain is approximately 34 db.

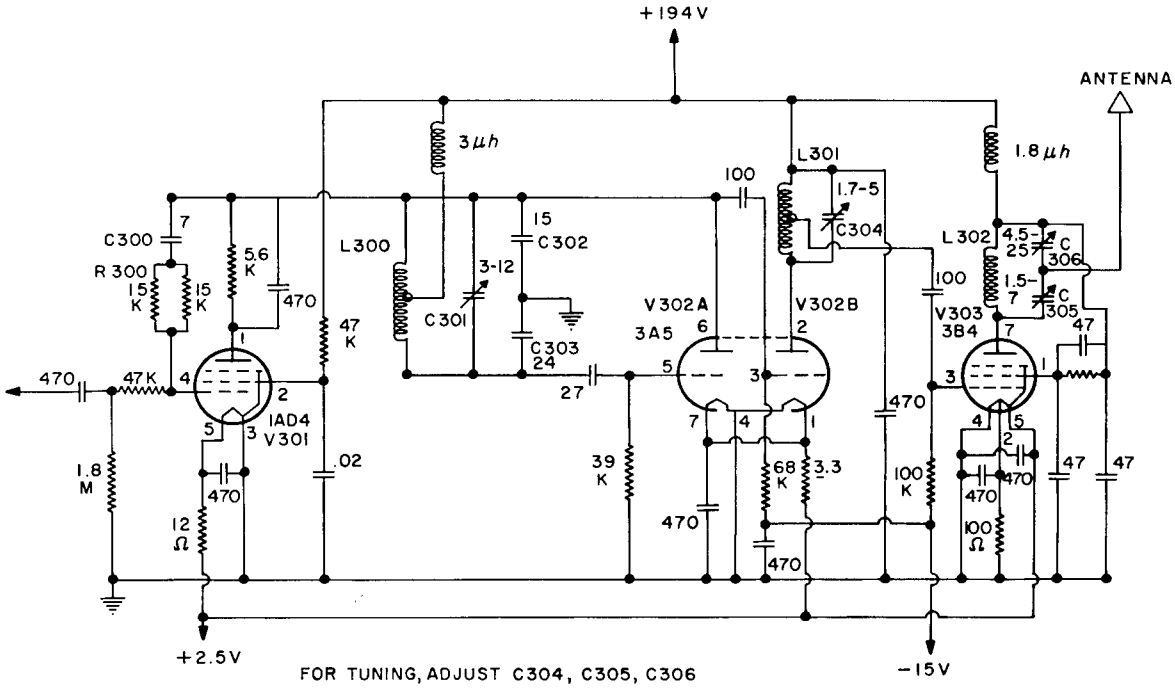

Fig. B1 - Schematic of FM transmitter

UNCLASSIFIED

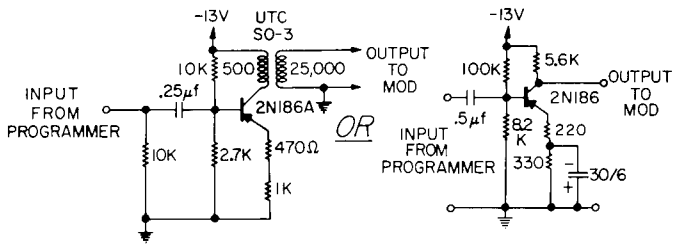

Fig. B2 - Schematic of modulator-amplifier

Programmer-Amplifier

The programmer-amplifier is located at the lower end of the buoy. It is constructed of two printed-circuit decks. The programmer consists of three transistors (Fig. B3); TR101 and TR102 make up the multivibrator circuit. Its repetition rate is approximately 4 seconds per cycle. The relay control is initiated from the multivibrator circuit. Relay K102 is in the emitter circuit of TR106. When K102 activates, it allows polarizing current to flow to the sensing head. It also causes K103 to activate, opening the circuit between the sensing coil and the amplifier. This is a protective measure, since it keeps the initial transient-induced voltage, caused by the sensing coil, from destroying transistors in the amplifier when K102 deactivates. Relay K103 activates and deactivates a short time after K102 activates and deactivates. The programmer also includes circuits to reduce transients which are produced by switching currents through relay contacts to the sensing head.

The precession signal from the sensing head is amplified by a three-stage high-gain amplifier which is located just above the programmer. Capacitor C1 is tuned with the sensing coil for the latitude at which the buoy will be dropped. In the final stage is a tank circuit, C9 and L1, which is also used to tune the amplifier for the latitude at which the buoy will be dropped. The amplifier has a gain of around 100 db and a bandwidth close to 50 cps at the half-power points.

Switching System

The buoy becomes operational upon entry into sea water. This occurs when the salt-water switch, exposed on the outside of the case bottom, becomes grounded to the case through the high conductivity of the sea water. This grounded connection of the salt-water switch activates a DPDT relay, switching on power to the programmer-amplifier and to the transmitter filaments (Fig. B4).

Cable

The cable used during the latter portion of the magnebuoy tests was an RG-58 C/U coaxial cable. Any other cable with the following characteristics could be used: low dc resistance in loop; high open-circuit impedance; and a small diameter to allow coiling in a confined space. The polarizing current has to flow through the cable to reach the sensing head. With a cable-loop resistance of 1.5 ohms per 50 feet and a sensing-head resistance of 1.83 ohms, it is seen that about half of the power from the power supply is dissipated in the cable.

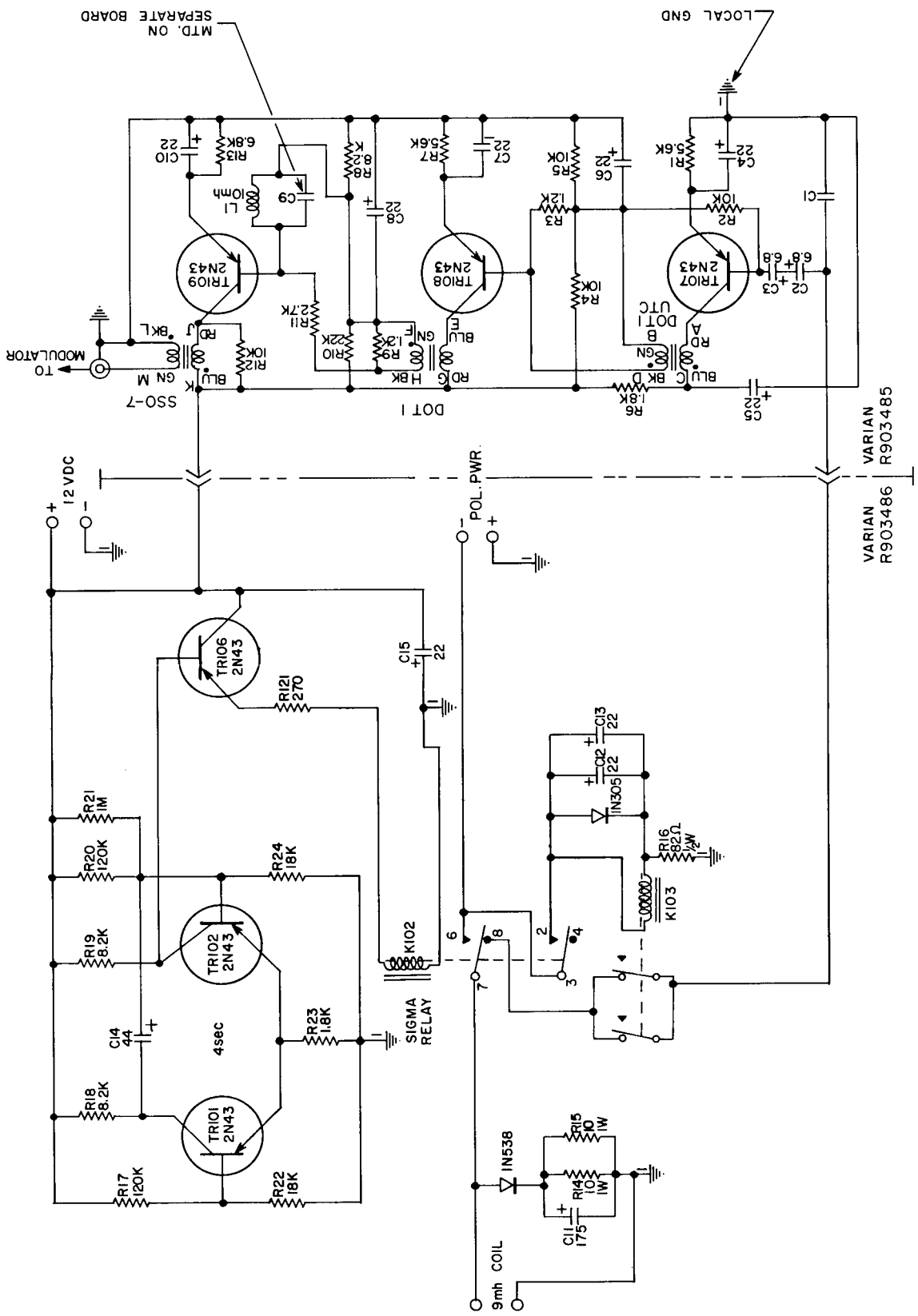

Fig. B3 - Schematic of programmer-amplifier

[redacted]

UNCLASSIFIED

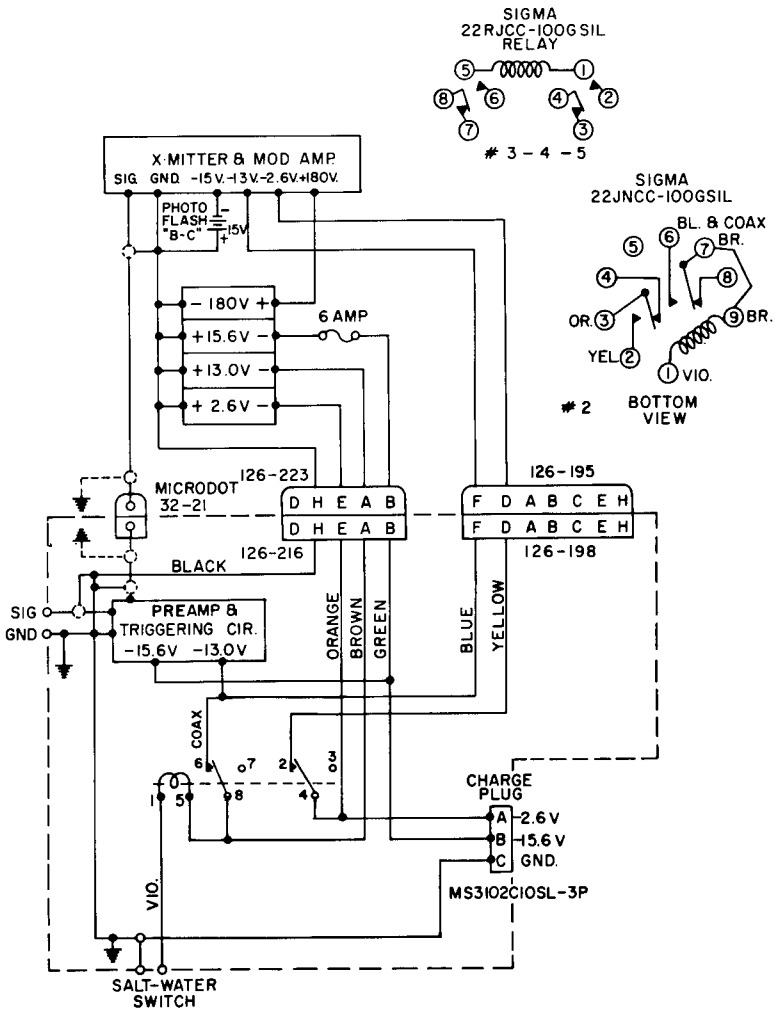

Fig. B4 - Wiring diagram of magnebuoy

Sensing Head

The sensing head (Fig. B5) consists of two balanced coils wound back to back and immersed in kerosene. Two coils are used instead of one to reduce the background noise level. The electrical constants of each coil are: inductance 9 mh, resistance 1.83 ohms, and a Q of 32. The coils produce a magnetic field of about 100 gauss with 5 amps applied.

Power Supply

The polarizing power is supplied by 12 size-D nickel-cadmium batteries connected in series. These batteries are rechargeable and maintain a near-constant discharge rate until they reach exhaustion (Fig. B6). Under actual conditions, with a full charge on the batteries, a half hour of operation can be expected with a 5-amp polarizing current. The same voltage output used for the polarizing current is used to supply power to the programmer-amplifier and modulation-amplifier. Two size-D nickel-cadmium batteries are used for filament power to the transmitter.

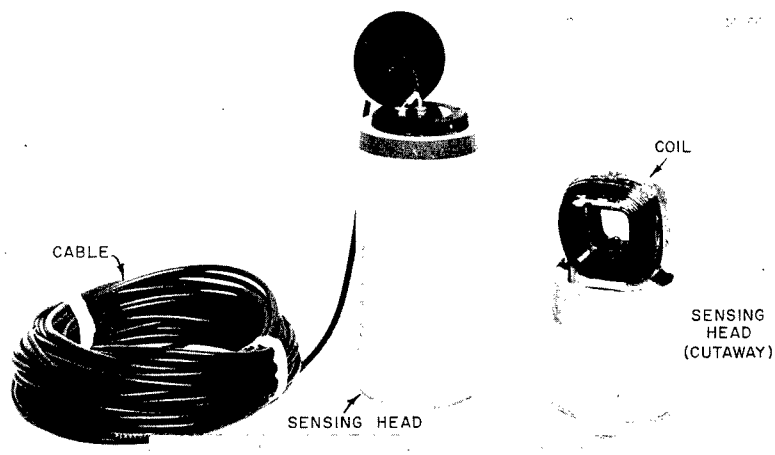

Fig. B5 - Magnebuoy sensing head

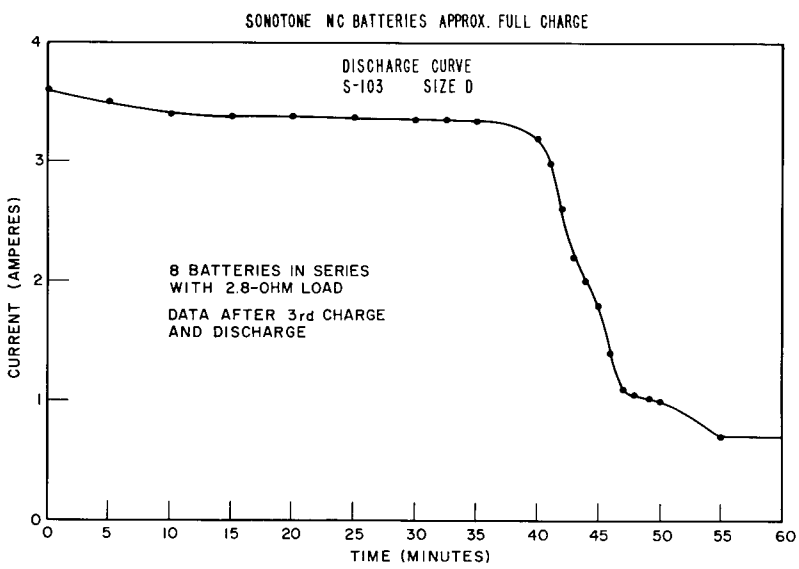

Fig. B6 - Discharge curve of nickle-cadmium batteries

UNCLASSIFIED

The Mallory Battery Company has developed a battery to supply plate voltage to the transmitter. Mercury cells (RM-1) were connected in series and placed in a container the size of the inner case (Fig. B7). The rating of battery SR-1844 is 194.4 volts at a 1000-ma discharge rate.

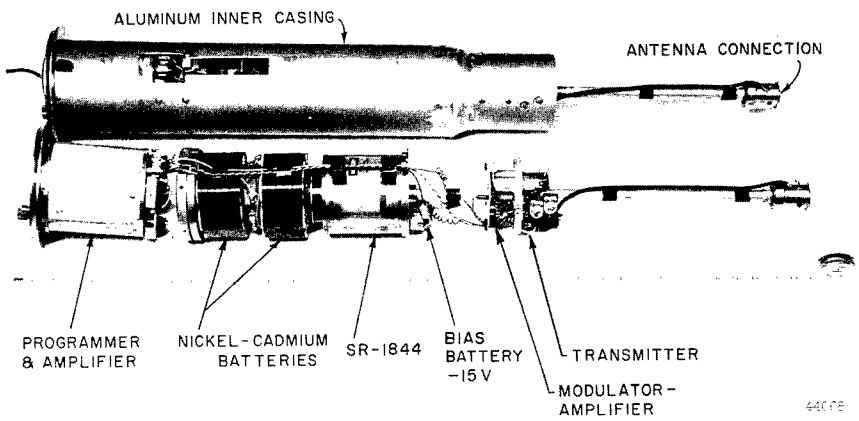

Fig. B7 - Magnebuoy inner electronics

Battery Recharge

A pressure connector on the bottom of the case is sealed watertight with a cap. On the bench this cap is replaced with a plug for charging the nickel-cadmium batteries within the buoy housing (Fig. B8).

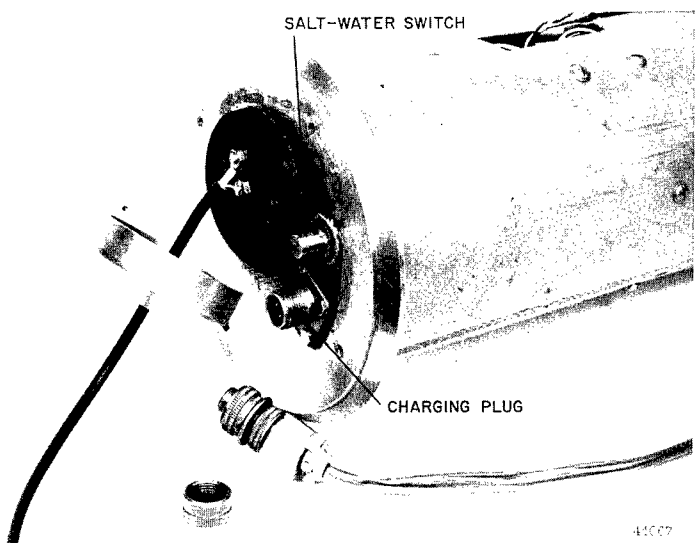

Fig. B8 - Magnebuoy end plate

[redacted]

Buoy Construction

The magnebuoy (Fig. B9) has an all-aluminum body to give it as much lightness as is possible and freedom from magnetic distorting fields. Stainless steel is used in localities of severe wear and corrosion. The aluminum is surface-treated to reduce salt-water corrosion. The fully equipped buoy weighs about 40 pounds.

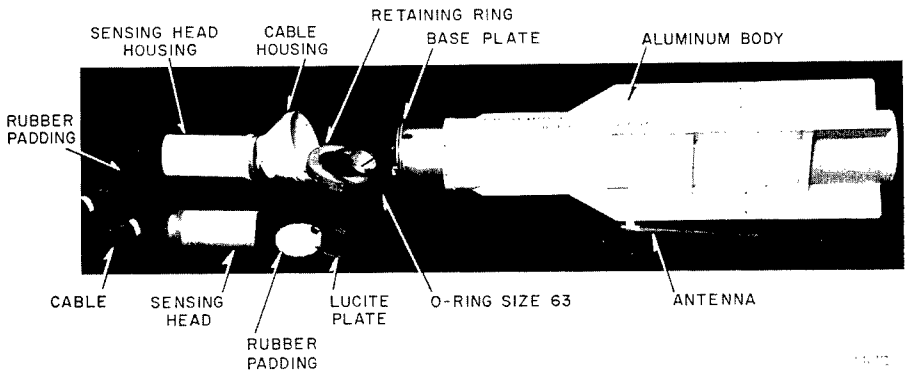

Fig. B9 - Magnebuoy assembly

The fins enable the magnebuoy to be air-dropped at an altitude of approximately, but not less than, 100 feet. Below 100 feet, the buoy tends to hit the water flat, with resulting external and internal damage. The shatter plate, at the bottom of the sensing-head housing, is smaller than the cross-sectional area of the magnebuoy proper, to ease water entry. The cone-shaped pieces reduce the drag as well as a secondary impact force, or "slap." It is also used for housing the cable, which dispenses to 50 feet below the magnebuoy. The sensing head has its shock (i.e., inertial force) reduced by means of rubber padding at its connected end.

STRUCTURAL COMPONENTS

Electronics Housing

The outside shell (Fig. B10) is made of 1/16-in. weldable aluminum. The shell is 6-1/2 inches in outside diameter and 40 inches in length. There is a 3/16-in. plate welded to one end, while the other end is left open for admission of the electronic gear. A bottom plate and retaining ring make up the pieces which close in the base of the housing. The outside surface of the shell has tapered fins (strengthened by two well-spaced bands riveted to them). These fins give the buoy a flight path similar to that of a projectile and also add to the strength of the case. To further strengthen this outside housing, 11/16 x 1/4 x 1/8-in. aluminum angles are welded to the inside surface at locations opposite to those of the fins. The primary purpose of these angles is, however, to guide an inner case with an O.D. of 4-21/32 inches.

UNCLASSIFIED

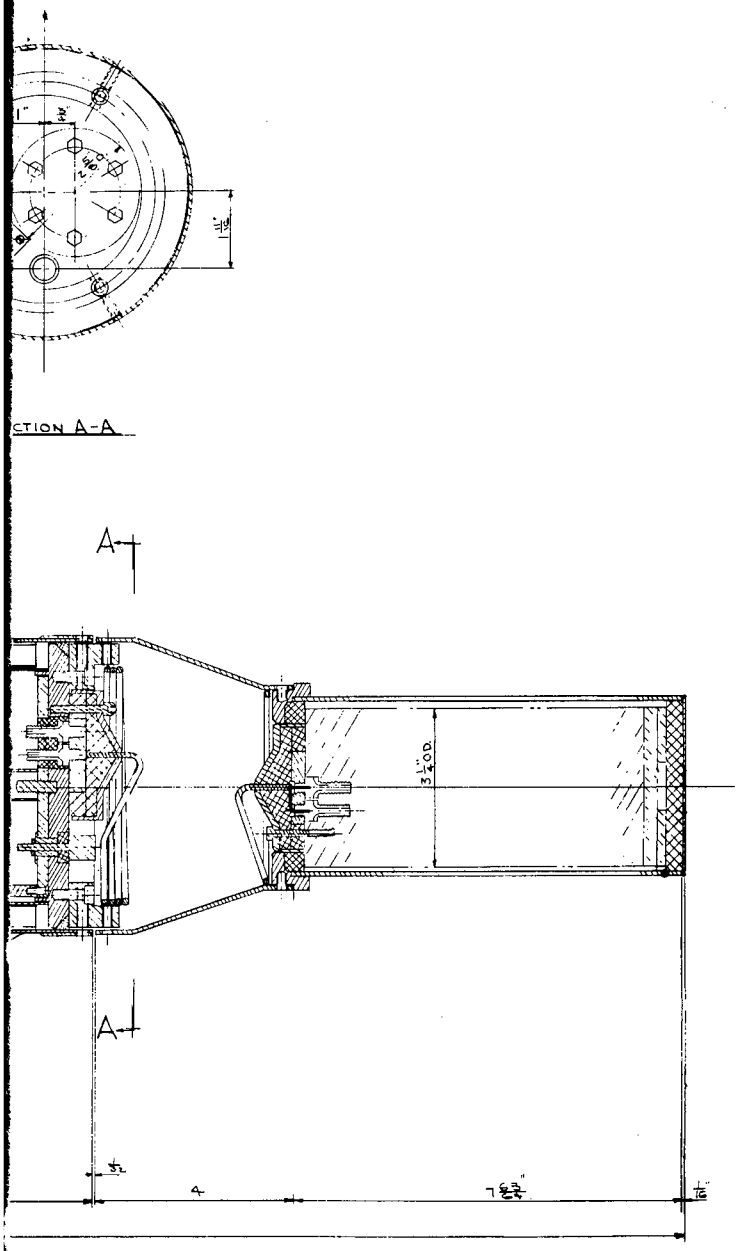

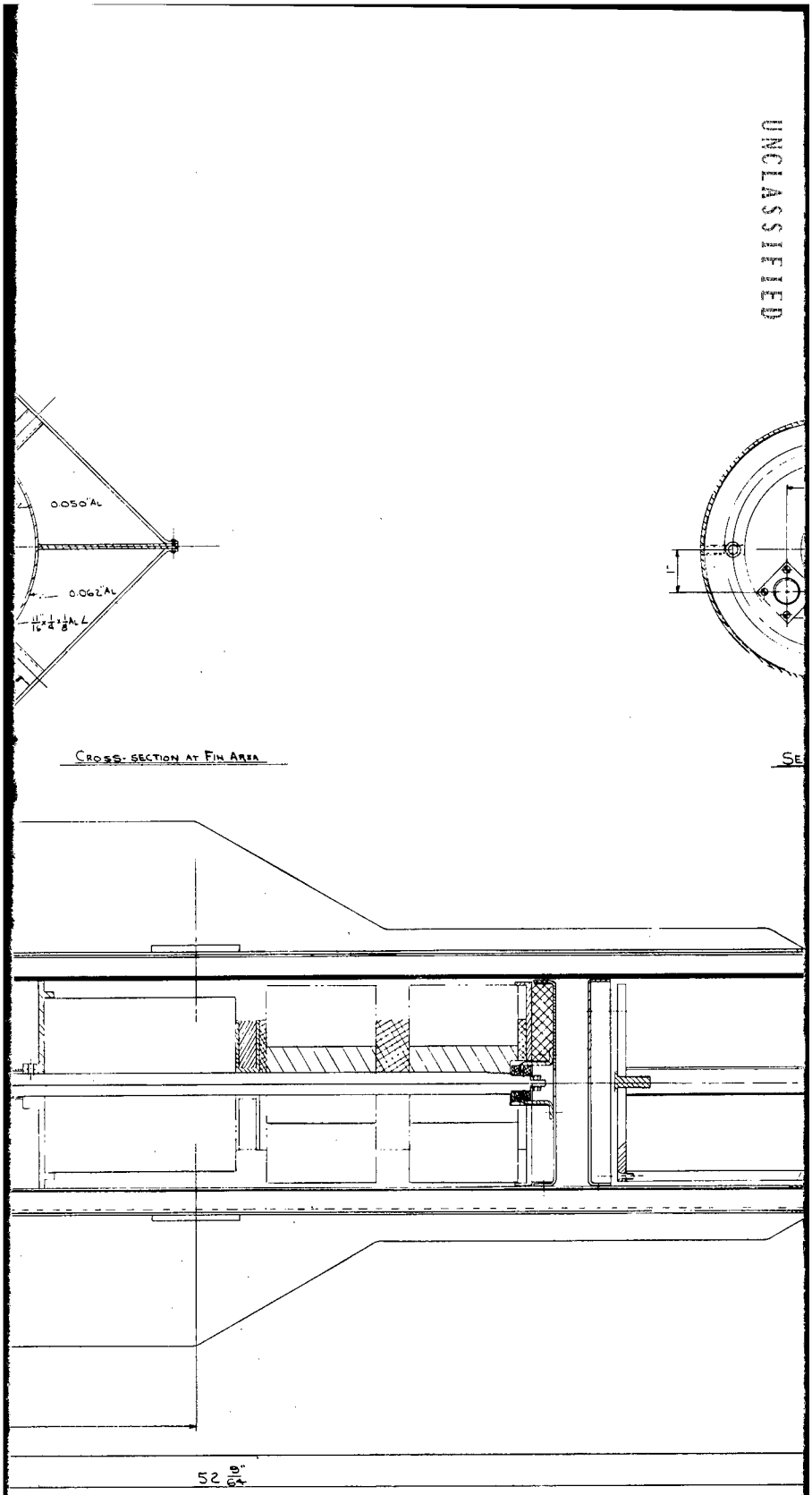

B10 - Mechanical drawing of magnebuoy

[redacted]

UNCLASSIFIED

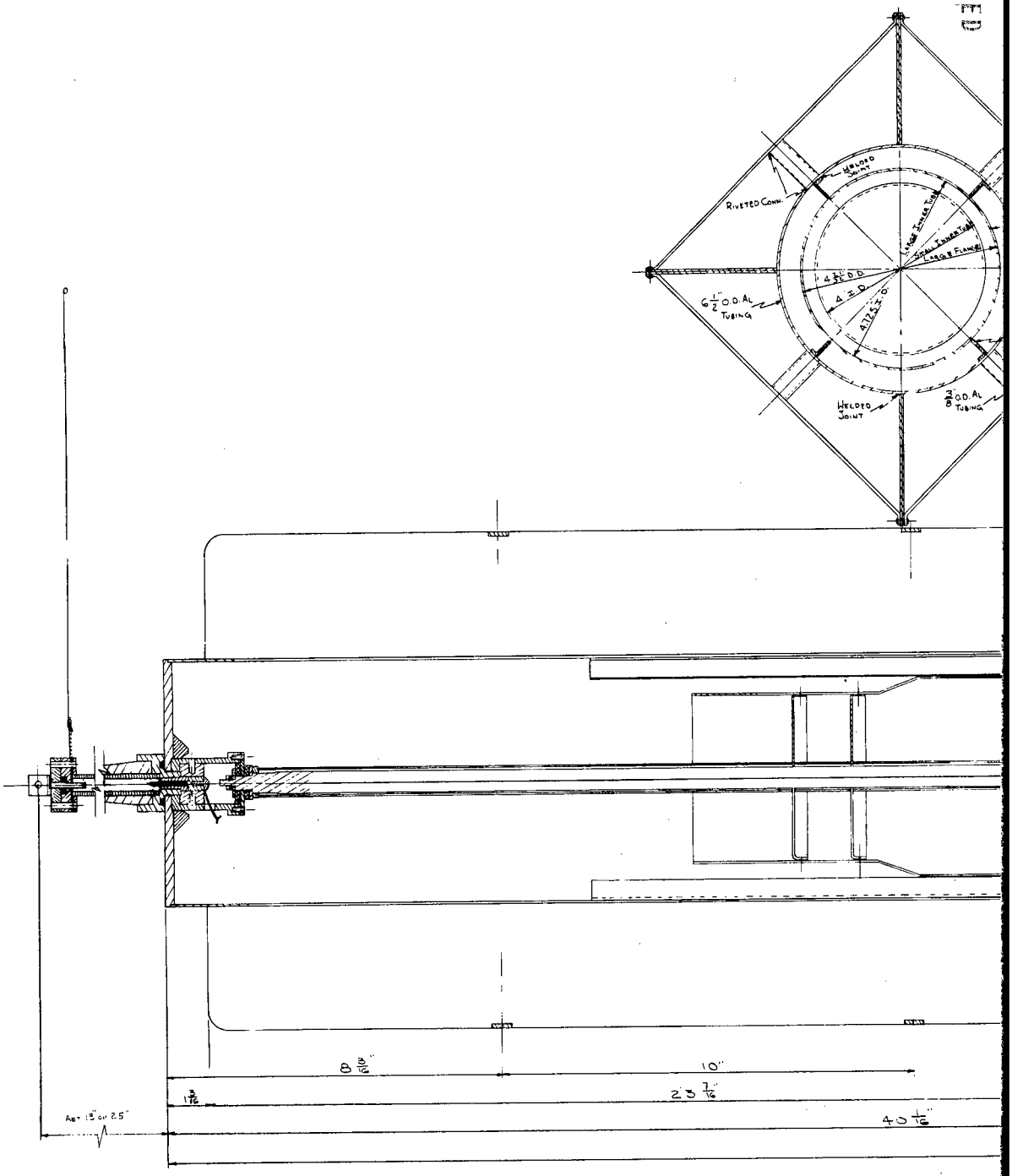

Fig.

[redacted]

UNCLASSIFIED

This inner tube directly houses the electronics gear. It is shaped to fit the flanges which carry the various electronics. This tube is of 0.050-in. aluminum and is 26-3/8 inches long. Through the center of all of the electronics equipment is a 1/2-in. aluminum rod. Various spacers on this rod allow separation of the equipment as required. One end of this rod fits into a flange, while the other is attached to the antenna coupling device.

Antenna Connectors

The male antenna connector (Fig. B11) is stainless steel into which a melamine tube is potted with Koroseal. A wire passes through this tube, connecting to a cadmium-plated brass fastener for the spring-steel antenna (Fig. B12). Another insulated fastener at the base of the antenna holds three 0.050-in. music wire rods which form the ground plane.

The hollow female connector coming from the aluminum shaft inside the case is also of stainless steel. Inside this, the antenna wire makes its contact, insulated by a Bakelite bushing and a nylon screw.

Housing Seals

The main watertight seals are two O-rings located at each end of the buoy proper. The first seal is enclosed in the male connector of the antenna. It is small, being only a size-14 linear-type O-ring. The other O-ring, size 63, is located at the bottom of the buoy proper, between the base plate and the retaining ring. Because of the unusual application of this seal, the O-ring groove in the base plate is tapered to force the O-ring toward the shell surface (this seals in a manner different from the usual). The salt-water-switch contact plug is sealed from water entry into the case by mechanically squeezing a rubber bushing between the contact plug and the base plate.

Cable and Battery-Charging Connectors

The cable connector for the bottom plate is exactly like that for the sensing head. It is an aluminum cap with six screw-clearance holes for bolting to its base. Inside the cap are two soft-rubber packing disks which, when reasonably pressed together against the base, form a watertight seal.

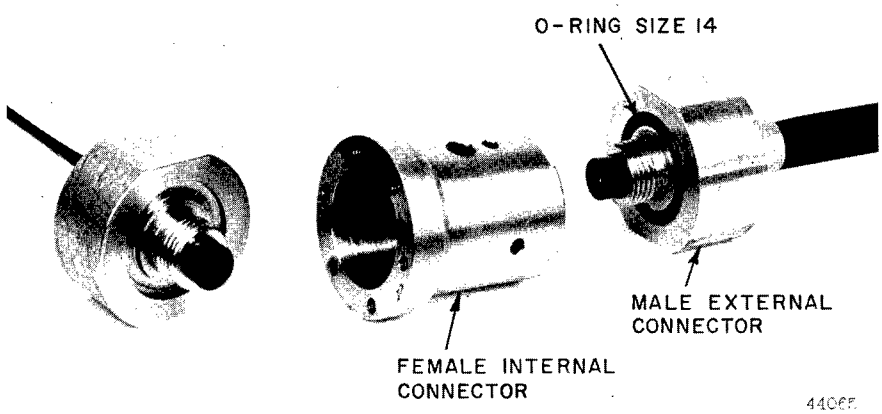

Fig. B11 - Magnebuoy antenna connectors

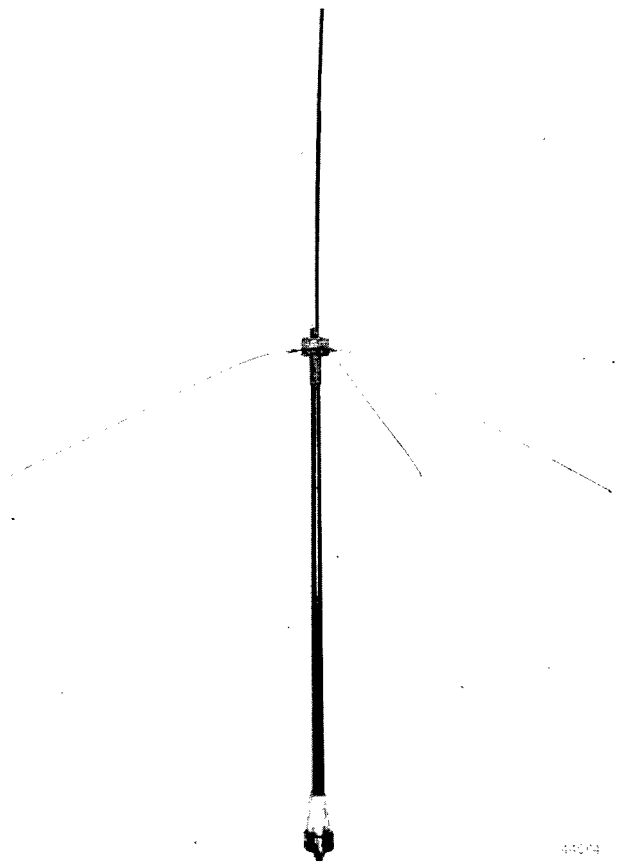

Fig. B12 - Magnebuoy extended fiberglas antenna

The wires are solder-connected and insulated by a Bakelite disk. The proper pressing of the cap and rubber against the soldered joint by the cap screws results in enough strength to keep the 5-1/4-lb magnetometer head from snapping the cable connection due to its inertial force. The battery-charging connector permits charging the batteries without removing the inner electronics housing from the magnebuoy case. It is a standard pressurized connector.

Sensing Head and Cable-Dispensing Method

The cone-shaped section is the cable enclosure (Fig. B13). Because of the shape of the cone, the cable, as a result of its own spring-like characteristics, coils neatly inside the cone. The normal weight component of the cable, being nearly that of the frictional force, keeps the cable inside the cone until an outside force (the sensing head) pulls it out.

At the top of the small, uniform, aluminum cylinder, which contains the sensing head, is a collar, inside of which is cemented a 1/2-in. thickness of sponge rubber. The magnetometer head rests on this and is backed up by another piece of sponge rubber (of a lower durometer value than the previous one) used as a spacer. At the very bottom, a 1/16-in. Lucite plate is taped on.

UNCLASSIFIED

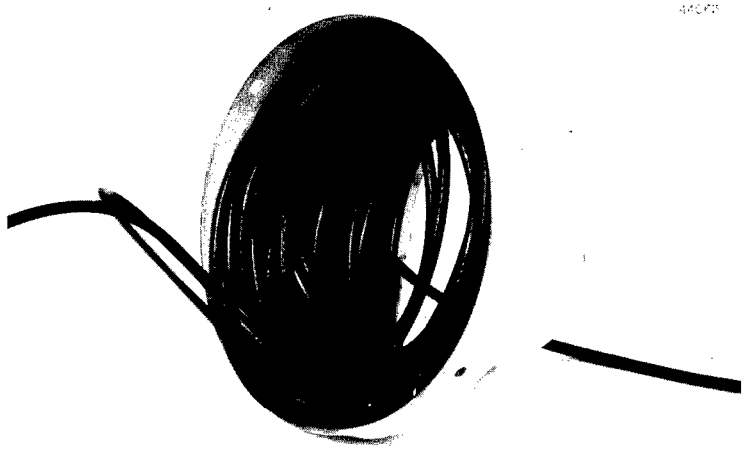

Fig. B13 - Cone housing for cable

SHIPBOARD ELECTRONICS

Receiver

A Nems-Clarke Model 1500-A all-purpose receiver was used in all tests. The receiver is a sensitive, low-noise receiver capable of receiving the FM signal from magnebuoy transmissions. A quarter-wave antenna with a suitable counterpoise was installed topside on the ship used during the experiments.

Q-Multiplier

A very selective high-gain feedback amplifier (Fig. B14) was used in all tests to increase the signal-to-noise ratio of the detected signal. The amplifier was tuned to the precession signal of the background (earth's magnetic field) before influence from a submarine. Its input and output are squaring circuits for limiting the signal to the amplifier and to the following stage.

Discriminator and Amplifier-Limiter

Since the discriminator is amplitude sensitive, a constant amplitude of signal is needed. The combination discriminator and amplifier-limiter (Fig. B15) provides a constant amplitude of signal. The first stage is an amplifier and limiter circuit making use of the sharp cutoff characteristics of the IN 465 zener diode. The signal is amplified further by the second transistor, then goes to the third transistor, the emitter follower.

Keyer

The keyer input is shown in Fig. B16. The squaring circuit prevents saturation of the first transistor. The output of the first transistor goes to a detector output which operates an emitter follower. When a signal is received, the detector-output voltage increases. This in turn fires the first one-shot multivibrator, composed of transistors

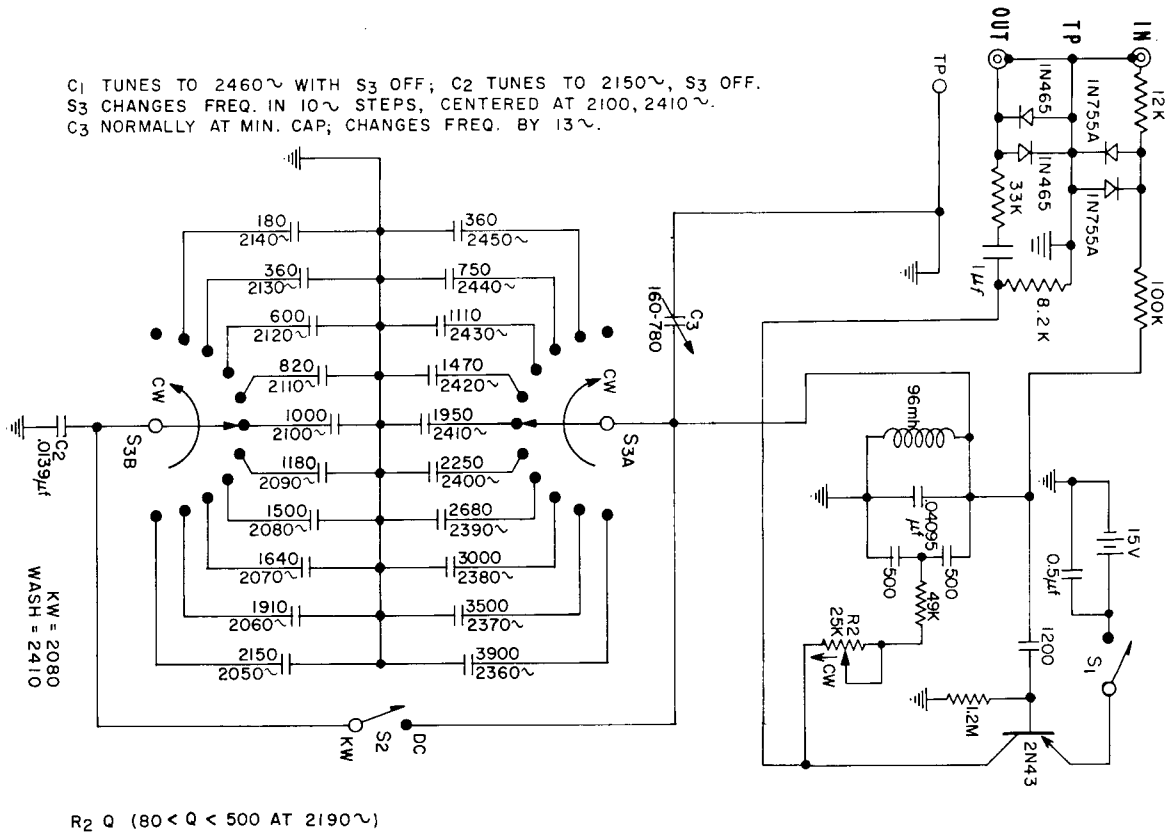

Fig. B14 - Schematic of Q-multiplier

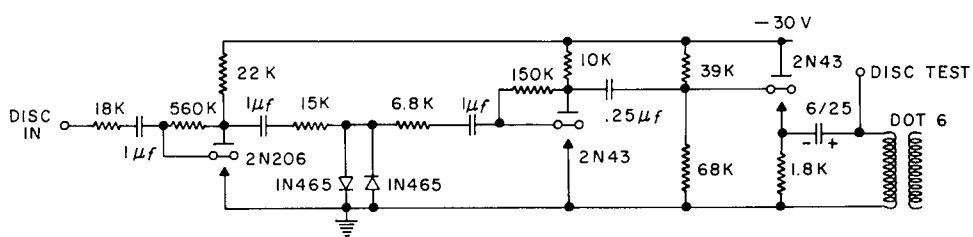

Fig. B15 - Schematic of the combination discriminator and amplifier-limiter

[redacted]

UNCLASSIFIED

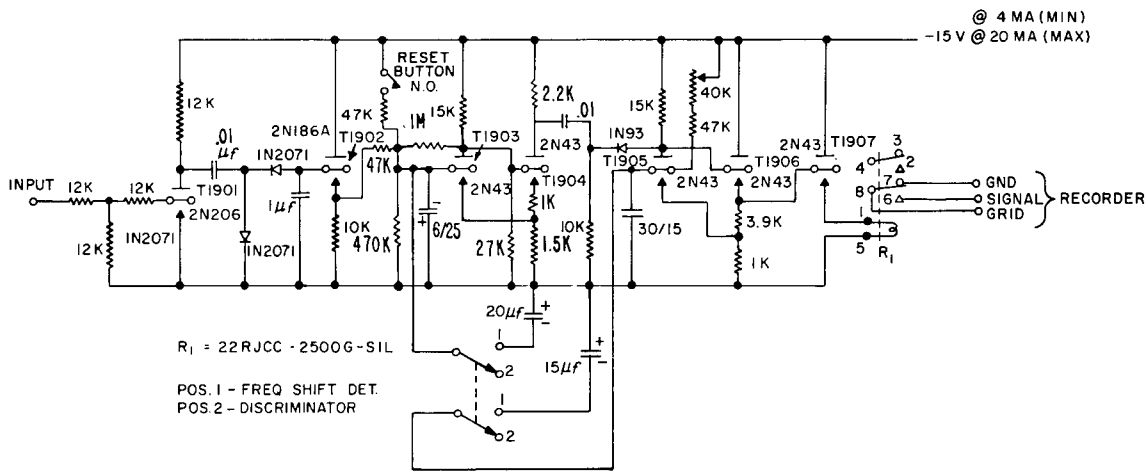

Fig. B16 - Schematic of keyer

3 and 4 whose time constant is operated at from two to four seconds. As soon as the first one-shot multivibrator (transistors 3 and 4) fires, the second one-shot multivibrator (transistors 5 and 6) fires. This second multivibrator's time constant varies around one-half second, long enough to actuate both relays in the circuit for periods ranging from 125 milliseconds to 1 second. The first multivibrator acts only as a safety precaution to prevent the relays from actuating more than once on a complete cycle of the precession signal input. Transistor 7 provided power to the first relay as an emitter follower.

Variable Frequency Discriminator

When the discriminator is tuned to the incoming frequency, the output voltage is zero. When the input frequency is higher than the tuned frequency of the discriminator, the output voltage is negative. The voltage reverses when a lower input frequency is applied. Within limits, the voltage is proportional to the incoming frequency. The discriminator (Fig. B17) is basically two tuned circuits separated by 100 cycles. To cover any precession frequency which could be obtained on the earth, many of these tuned circuits are needed in the first trials of the discriminator. Two coarse-tuned circuits which covered a band of frequencies in seven-cycle overlapping increments from 2067 to 2125 cps were used. This is satisfactory for the area that was to be used in the tests (Key West, Florida). Fine tuning was incorporated to tune within the seven-cycle steps.

Recorder

The output of the discriminator goes to a Varian G-10 graphic recorder. The recorder has a 50-mv span for full-scale deflection. This corresponds to a four-cycle change of frequency at the discriminator. The balance motor circuit was opened and the leads brought out to two terminals on the side of the recorder, such that the keyer could control its operation (Fig. B18). Opening the circuit prevents the recorder pen from moving when the signal is not being observed. Closing the circuit during the time the signal is present causes the pen to move as frequency changes.

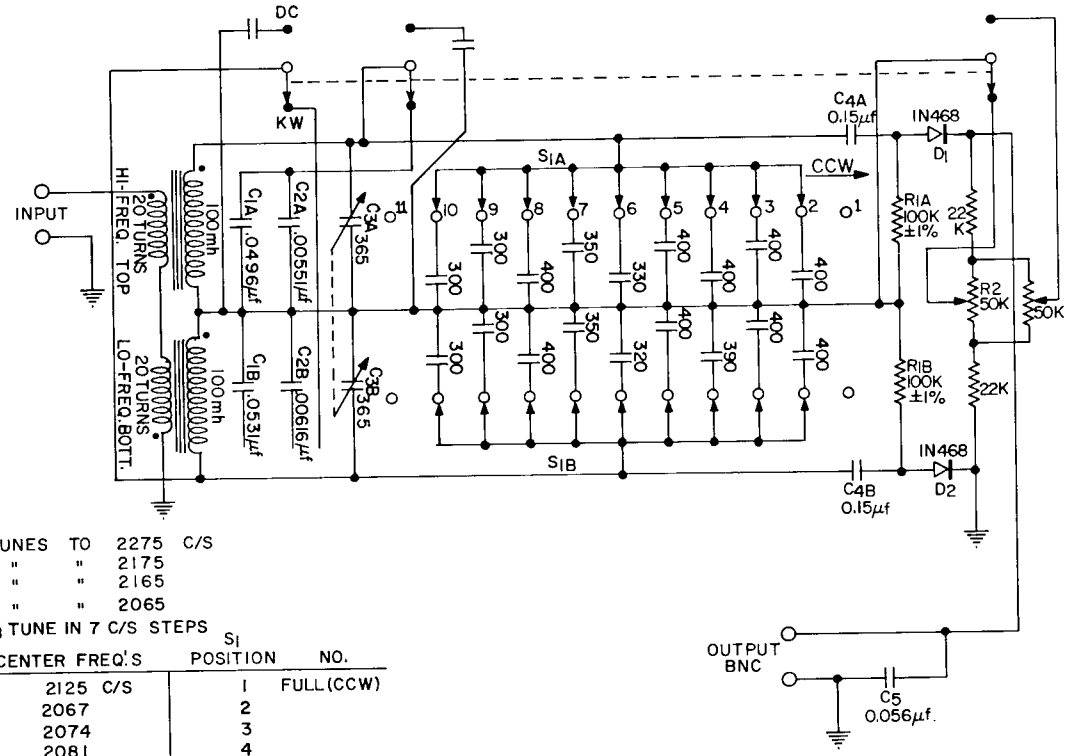

C_{1A} TUNES TO 2275 C/S
C_{1B} " " 2175
C_{2A} " " 2165
C_{2B} " " 2065
$C_{3A,B}$ TUNE IN 7 C/S STEPS

CENTER FREQ'S	S_1 POSITION	NO.
2125 C/S	1	FULL (CCW)
2067	2	
2074	3	
2081	4	
2087	5	
2094	6	
2100	7	
2106	8	
2114	9	
2119	10	
2125	11	FULL (CW)

C_3 – FINE TUNE
S_1 – STEP TUNE

Fig. B17 - Schematic of variable frequency discriminator

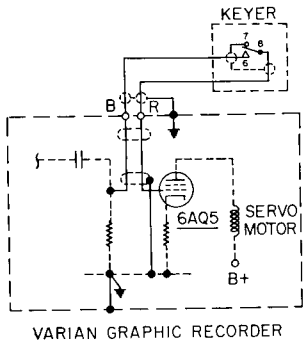

Fig. B18 - Schematic of change made to Varian recorder. This change allows the keyer to control the recorder.

[redacted]

UNCLASSIFIED

Station Magnetometer*

The received precession signal frequency is first tuned to increase the signal-to-noise ratio by the location tuner. Then it goes to a limiter amplifier, transforming the damped sinusoidal signal into a square wave of approximately uniform amplitude. This square wave is transformed into a pulse by the shaper amplifier for operating the slow binary chain. A slow gate allows the pulses to trigger the slow-counter binary chain during the time the signal is present and to prevent the binary chain from counting noise when there is no signal present. The slow counter initiates and terminates a time gate equal in duration to a preselected number of cycles of the precession frequency. The number of cycles required to form the time gate can be selected as 256, 512, 1024, 2048, or 4096.

A fast gate is initiated and terminated by the time gate of the slow counter, allowing a crystal-oscillator signal of 500 kc/sec to pass to the fast-counter binary chain. The fast counter consists of nine binaries, in which the maximum count that could be registered is 511 counts. Therefore, during the single time gate, the fast counter will register a full count, clear itself, start over many times, and finally end up on a count of zero to 511. At the termination of the fast gate, the digital information stored in the fast counter is converted to analog information to drive a strip-chart recorder. The analog information, automatically added, provides an output voltage proportional to the time gate of the slow counter. The accuracy of indicated measurement of time is ±2 μseconds corresponding to ±1 count of the fast counter. The relative sensitivity, depending on precession frequency and time gate, can be calibrated on the recorder, varying from 0.023 gamma to 1.87 gammas per count.

Variable Oscillator and Tunable Amplifier

The variable oscillator used was a standard HP model 200 CR. This is a phase modulated bridge-T oscillator, tunable in frequency by varying a ganged capacitor. Since the oscillator was to be ganged with the tunable amplifier, the oscillator was modified to be ganged with a dual precisioned 20-k pot of 10 turns. Since the oscillator would change in frequency by varying the capacitance or resistance in the bridge circuit, the oscillator was made to operate by varying the dual 20-k pots and setting the values of capacitance. This left the large value of capacitance available for tuning the amplifier. This oscillator was tested for drift in frequency from a cold start before and after modification. The drift in frequency for both cases is shown in Fig. B19. It can be seen that the converted oscillator is more stable after being on 5 minutes.

The tunable amplifier in Fig. B20 uses two stages of clipping and then goes through a series-tuned circuit which makes use of the large variable air capacitance that is ganged on the converted oscillator. Then the signal is passed through to a one-stage amplifier with an emitter-follower output.

Mixer and Doubler

The mixer and doubler schematic is shown in Fig. B21. It can be seen that the first part of the circuit mixes the signal frequency and the oscillator frequency so that the output goes to a bandpass filter centered at 100 cps. This signal frequency is then doubled and passed to a 200-cps filter.

*For schematic and instruction manual, Varian Associates, 611 Hansen Way, Palo Alto, California, should be contacted.

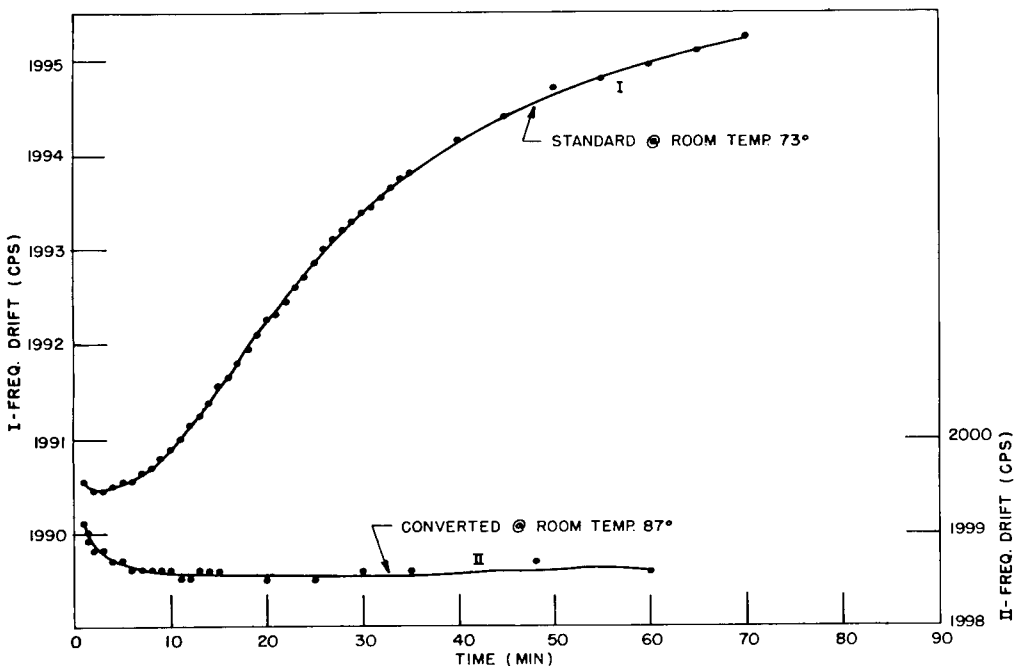

Fig. B19 - Drift in frequency of oscillator versus time

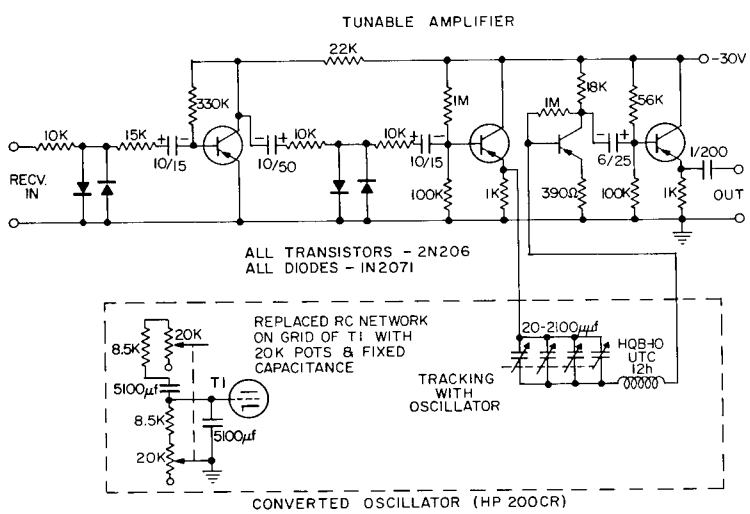

Fig. B20 - Schematic of tunable amplifier tracking with converted oscillator

[redacted]

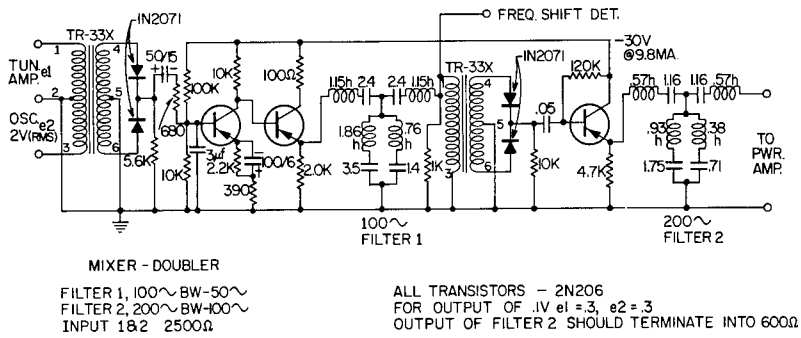

Fig. B21 - Schematic of frequency mixer and doubler

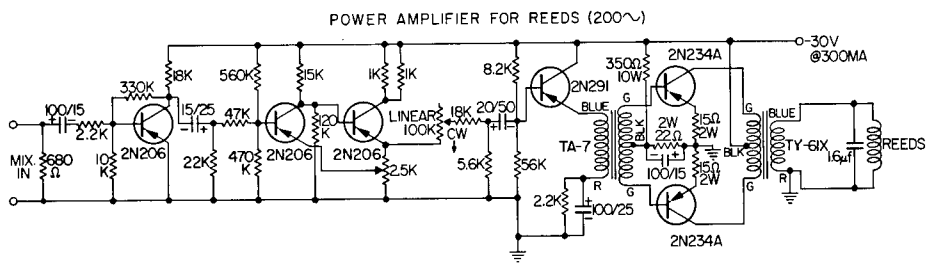

Fig. B22 - Schematic of power amplifier for vibrating reeds

Power Amplifier

The output of the 200-cps filter feeds directly into 600 ohms, the input of the power amplifier. The power amplifier (Fig. B22) has one stage of amplification and then goes to a Schmit Circuit for making the signal of constant amplitude. From this, the constant amplitude signal is amplified powerwise to operate the reeds.

* * *