NRL Report 5103

SCANNING ARRAYS USING THE FLAT SPIRAL ANTENNA

Julius A. Kaiser

Microwave Antennas and Components Branch
Electronics Division

March 14, 1958

NAVAL RESEARCH LABORATORY
Washington, D.C.

APPROVED FOR PUBLIC
RELEASE - DISTRIBUTION
UNLIMITED

UNCLASSIFIED

CONTENTS

Abstract	ii
Problem Status	ii
Authorization	ii
INTRODUCTION	1
THEORETICAL CONSIDERATIONS	2
PHASING PROPERTIES OF THE SINGLE SPIRAL ANTENNA	3
PHASING AND POLARIZATION PROPERTIES OF THE SPIRAL DOUBLET	4
SPIRAL DOUBLETS APPLIED TO SCANNING ARRAYS	6
EXPERIMENTAL RESULTS	8
CONCLUSIONS	17
ACKNOWLEDGEMENTS	17
REFERENCES	20

ABSTRACT

A pair of equally excited but oppositely sensed Archimedean two-wire spirals situated close to one another in the same plane – a doublet – is used to generate a linearly polarized field in which the direction of polarization and phase is controlled or varied by rotation of the spiral radiators. An array of these doublets can be made to scan by rotation of the several spiral elements; a maximum scan angle of $\pm 50^0$ has been obtained with a preliminary model. A virtual doublet is achieved by placing a single spiral in a right-angle trough. A preliminary scanning array comprising four spirals in a trough was made to scan approximately $\pm 39^0$. The possibility of using a parasitic spiral in conjunction with a driven spiral for application to a broadside scanning array is indicated. Also, a brief simplified analysis of the two-wire Archimedean spiral is presented.

PROBLEM STATUS

This is an interim report; work continues on the problem.

AUTHORIZATION

NRL Problem R09-03
Project NR 411-000, Task NR 411-001

Manuscript submitted January 27, 1958

UNCLASSIFIED

SCANNING ARRAYS USING THE FLAT SPIRAL ANTENNA

INTRODUCTION

When properly excited, the two-wire Archimedean spiral configuration of Fig. 1a is an inherently broad-band radiator – broad band with respect not only to input impedance, but also to radiation pattern and polarization of radiated field. Figure 1b exhibits the "square" counterpart of the configuration of Fig. 1a. In practice, these configurations are energized from a coaxial line feed which attaches to the center of the configuration so that one spiral element connects to the inner conductor of the coaxial line whilst the other spiral element connects to the outer conductor.

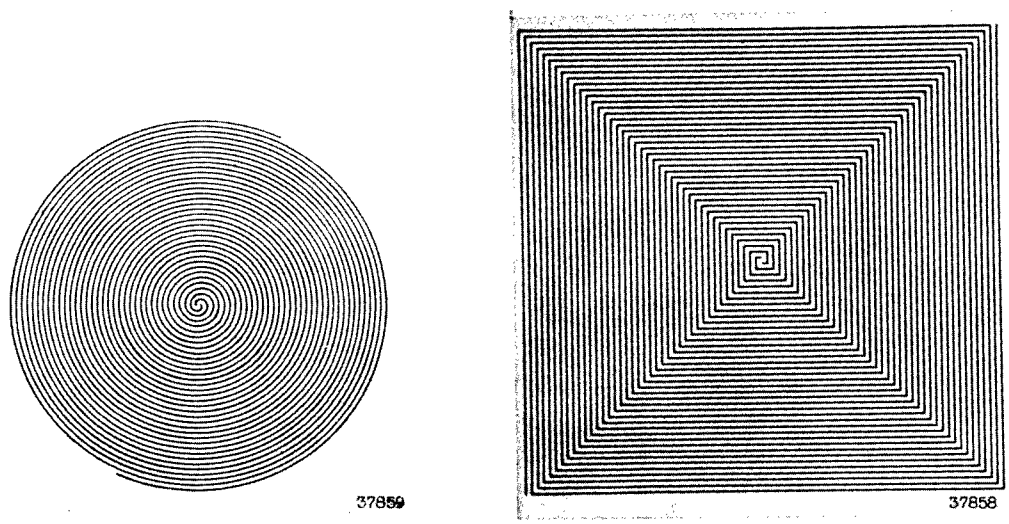

(a) (b)

Fig. 1 - Circular and rectangular Archimedean spirals

So energized, the configuration radiates a broad circularly polarized pencil beam to each side of the spiral. Each radiated beam is normal to the plane of the spiral, and the sense of circularity of polarization of the beam on any one side corresponds to the winding sense of the spiral as viewed from the opposite side. Accordingly, the two radiated beams are identical except that the rotational sense of polarization of the radiated field on one side is the opposite of that on the other. For most applications it is desirable that the spiral radiate to one side only, and this is readily accomplished by appropriately backing the spiral on one side by a ground plane or by a cavity. The spiral antenna described above has received much attention in recent years – principally because its broad-band characteristics render it admirably adaptable to the requirements of radar countermeasures (1-4).

THEORETICAL CONSIDERATIONS

There is no adequate theory for the spiral antenna at the present time. However, the following heuristic explanation of the radiation mechanism of this antenna is offered, since it is in accord with experimental observations and is of genuine help in understanding the design possibilities of this relatively new and interesting antenna.

The point of view taken here is that the two-wire spiral antenna behaves as though it were a two-wire transmission line which gradually – by virtue of its spiral geometry – transforms itself into a radiating structure or antenna. It is well known that a two-wire transmission line of relatively narrow spacing yields a wholly negligible amount of radiation when excited at its terminals. This is due, of course, to the fact that the currents in the two wires of the line at any normal cross section are always 180 degrees out of phase so that the radiation from one line is essentially cancelled by the radiation from the other – assuming close spacing of the two lines in terms of the excitation wavelength.

Suppose now that a two-wire transmission line is formed into the spiral configuration of Fig. 1a. Let P (see Fig. 2a) be a point on one wire of the line at a distance measured along the wire from the initial point A. Then the point Q on the other wire of the line at the same distance from the initial point B is situated diametrically opposite the point P with respect to the center O, and both P and Q lie on the same circle centered at O. This implies that the point P and its neighboring point P′ on the other wire directly alongside P lie at such distances from A and B, respectively, that the difference of these distances is precisely the arc length QP′ along the spiral. If Δr is less than r, the arc length QP′ is approximately equal to πr. Assuming that each wire supports a progressive wave of current and that these current waves are antiphase at A and B, where the coaxial line feeds the spiral, it is clear that the difference in phase of the two current elements at any point P on the two-wire line, measured in radians, is $\pi + 2\pi(\pi r/\lambda)$, where λ is the current wavelength on the spiral and r is the radial distance from the center O to the point P. Thus neighboring current elements start antiphase at the feed points A and B and gradually come into phase as one proceeds outward along the spiral two-wire line. When r is $\lambda/2\pi$, these currents are precisely in phase and radiation is a maximum.

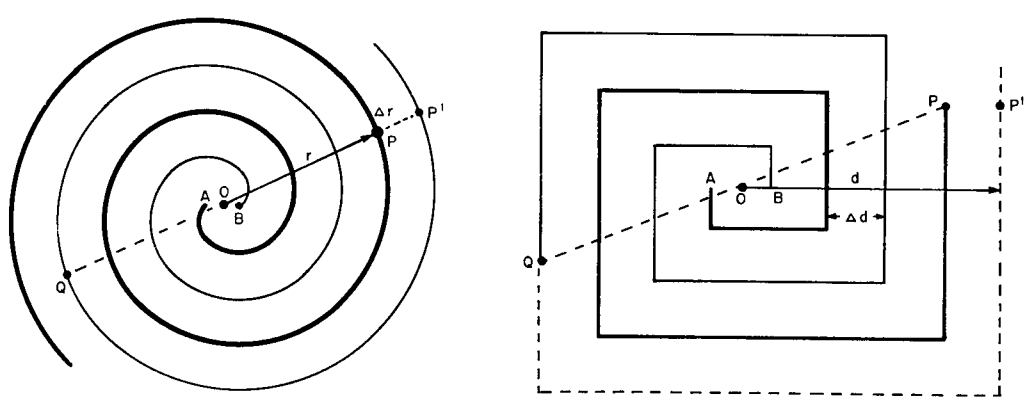

(a) (b)

Fig. 2 - Construction of the Circular and Rectangular Archimedean spirals

UNCLASSIFIED

A similar situation holds for the square spiral configuration of Fig. 1b, as inspection of Fig. 2b shows. Here, for a cross-sectional point P-P′ on the two-wire line, the path difference in the two-wire lengths is given very closely by 4d, where d is the perpendicular distance from the center O to the side of the square spiral turn on which P-P′ lies. Also the circumference of the turn on which P-P′ lies is approximately 8d. This difference of 4d in wire lengths of the transmission line is independent of the number of turns appearing on the spiral, provided only that the spacing between elements on the spiral Δd is the same and small compared with d. A similar statement holds for the circular spiral where Δr, the spacing between elements, is assumed to be constant and small compared with r. These conditions will prevail in all further considerations.

There are two items of interest that attach to a particular point on the two-wire spiral line: the total difference in wire lengths of the two-wire line to the point and the circumference or path length of the particular turn on which the point lies. For the rectangular spiral these items are

$$\text{difference in wire lengths} = 4d$$

$$\text{circumference} = 8d.$$

When d is $\lambda/8$, the phase change or total difference in wire lengths is $\lambda/2$, while the total circumferential path length is λ, a full wavelength, or a quarter wavelength on each side of the square. Phasing of the radiated field from opposite sides of the square is such as to add in a direction normal to the plane containing the spiral. Moreover, radiation from the two opposite sides is equal in intensity but with a relative phase difference of 90 electrical degrees, so that the radiated field normal to the plane of the spiral is circularly polarized. Concerning the mechanism of radiation from the spiral, one can say that the voltage impressed across the input terminals of the spiral from a transmission line is 180 degrees out of phase (transmission line mode) but as the energy progresses outward from the spiral center this phase difference eventually reduces to zero where radiation occurs most strongly (radiation mode). This development disregards mutual coupling between adjacent turns but appears justified from spiral behavior.

For the circular spiral where again the wires are equally spaced, at a point whose radial distance from the spiral center is r, we have

$$\text{difference in line lengths} = \pi r$$

$$\text{circumference} = 2\pi r.$$

When r is $\lambda/2\pi$, the phase change is $\lambda/2$ and the circumference is λ. Thus, the condition that the circumference is a full wavelength for a path length difference of $\lambda/2$ always exists for both the circular and rectangular spirals. This quality makes the spiral antenna an inherently broad-band device, the basic requirement being only that the radius be large enough to allow a half wavelength of phase shift. Also, inasmuch as the radiating ring is a wavelength in circumference for all frequencies over which the spiral operates, a constant beamwidth should be, and indeed is, maintained.

PHASING PROPERTIES OF THE SINGLE SPIRAL ANTENNA

A spiral property which has not been fully exploited is that of circular symmetry about the spiral axis, which allows rotation of the spiral about its axis to produce a change in phase of the radiated field everywhere in space without variations in the far-field amplitude. Moreover, one degree of mechanical rotation produces a corresponding change in phase of one electrical degree.

To see in a simple way why this phasing property is so, let us represent the circular spiral antenna as a circular conductor, one wavelength in circumference, which supports a uniform progressive current wave. Referring to Fig. 3, the arrows on the circular conductor indicate the direction in which the current phase fronts move.

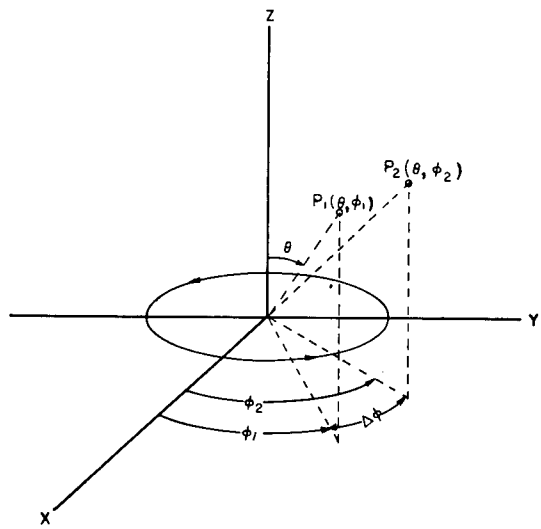

Fig. 3 - Phase properties of a single spiral radiator

Consider now two points in the far field of this circular current distribution, $P_1(\theta, \phi_1)$ and $P_2(\theta, \phi_2)$, whose spherical coordinates differ only in the azimuth coordinate ϕ. It is clear that these two points see the same current distribution except for a shift of phase in the current sources along the circle; that is, the sources for the radiation field at P_2 are identical with the sources for the radiation field at P_1 except for a phase lag in the sources for P_2 over those for P_1 in the amount of $\Delta\phi$ electrical degrees. Accordingly, one concludes that the radiation field of the circular one-wavelength current loop depends only phase-wise on the azimuth coordinate ϕ and that this dependence is given by the factor $e^{j\phi}$ It follows immediately that a rotation of the circular current loop which does not disturb the intrinsic current phasing changes the phase of the radiation field of the loop everywhere by an amount which in electrical degrees is precisely equal to the number of degrees of mechanical rotation.

PHASING AND POLARIZATION PROPERTIES OF THE SPIRAL DOUBLET

Two spirals of opposite sense, placed side by side in the same plane (Fig.4) and excited equally, will radiate a combined field which everywhere will be linearly polarized. Although linearly polarized, the direction of polarization of the far field at a particular point will be a function of the relative electrical phasings between the two spirals and the position of that point in space relative to the plane containing the spirals. Consider, first, an on-axis fixed position which is normal to the plane containing the two oppositely sensed spirals, and let the phase of one spiral be varied with respect to the other by rotation. As illustrated in Fig. 5, the sum of the radiated fields from the two equally excited spirals remains linear when the phase of one element (the element on the right in Fig. 5) is changed relative to that of the other, and the direction of polarization rotates through an angle $\theta/2$ when the relative phase is changed θ degrees.

UNCLASSIFIED

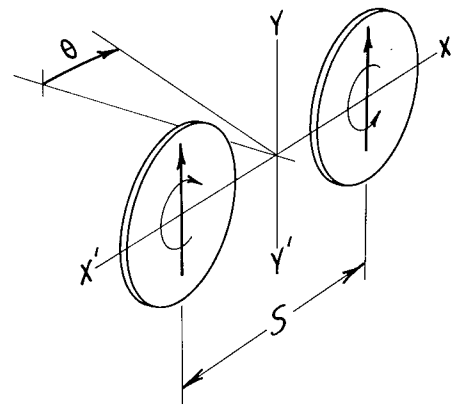

Fig. 4 - Spiral doublet schematic

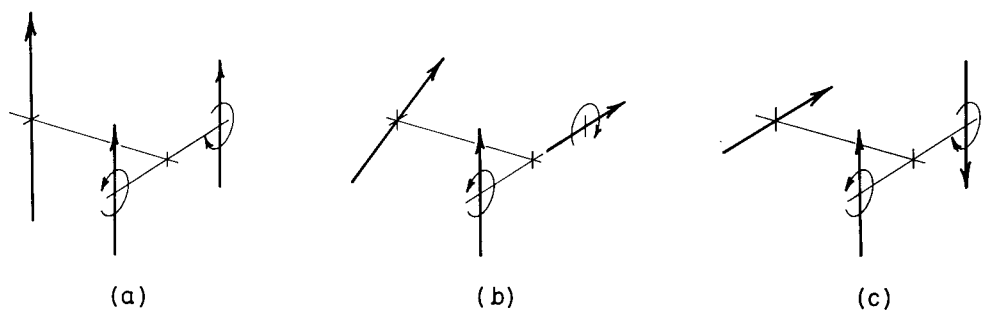

Fig. 5 - On-axis phasing possibilities of the doublet

Consider now the case where the relative phase between two oppositely sensed but equally excited spirals remains fixed, and explore the nature of the far field in the two principal planes. One principal plane is contained in X′X of Fig. 4 while the other is contained in Y′Y. If the relative input phase is such as to give vertical polarization on-axis, then in the X′X plane, because of the space phasing between the spirals, the polarization will tilt from the vertical as the angle from the normal is increased. Shown in Fig. 6 (solid curves) is a typical amplitude variation for close spiral spacing in the X′X principal plane as θ is varied. The exact shape of the curve is a function of S. If the phase in the above example had been such as to give horizontal polarization, the amplitude vs angle graphs would be as shown in the dotted curves, the exact shape again a function of the spacing S.

Amplitude variation in the Y′Y plane of Fig. 4 is a function only of the single spiral form factor for the polarization considered, since no differential space phasing with respect to the two spirals obtains throughout this plane.

The important properties of the equally excited doublet composed of two oppositely sensed spirals in the same plane can now be summarized: If one spiral is rotated through an angle θ while the other remains fixed, the direction of polarization of the combined fields on-axis changes by $\theta/2$; however, if one spiral is rotated in either direction through an angle θ while the other spiral is simultaneously rotated in the opposite direction through the same angle θ, the polarization of the radiation field remains unchanged in direction but the phase of this field at all points changes by precisely θ electrical degrees. In neither case is there any change in amplitude provided each

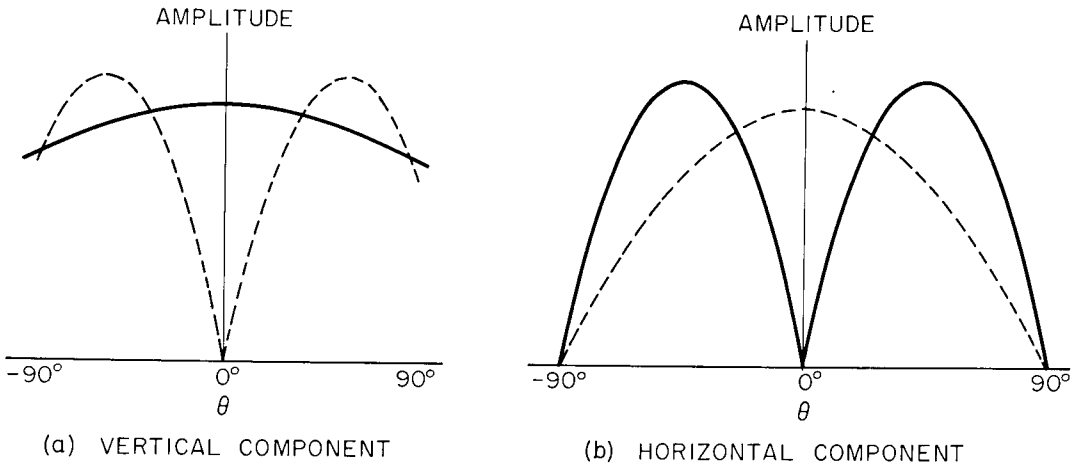

Fig. 6 - Typical variation in amplitude of doublet field in the plane bisecting both spirals where the bisecting plane is horizontal

spiral has perfect circularity. Since the spiral is an inherently broad-band radiator, the above properties hold over a wide band of frequencies.

SPIRAL DOUBLETS APPLIED TO SCANNING ARRAYS

Additional unique properties obtain if two of the doublets are assembled in the fashion shown in Fig. 7. With this arrangement, where the left-hand and right-hand spirals are alternated, there is symmetry about both principal planes. For the input phasings shown and assuming equal excitation of each spiral, vertical polarization obtains over both principal planes. In other words, there is essentially no rotation of polarization in the principal planes for any angle θ, since the off-axis horizontal component from one doublet is of equal amplitude but opposite phase from that of the adjoining doublet and so cancels in the far field.

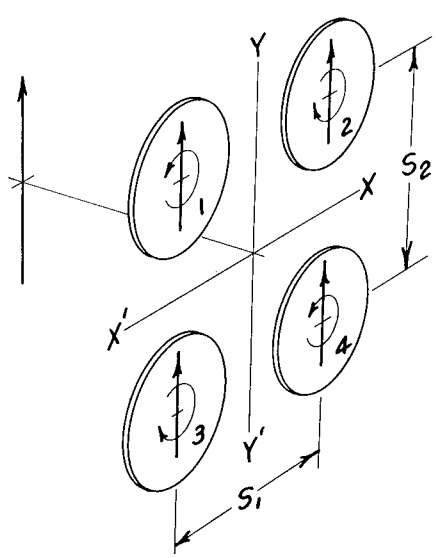

Fig. 7 - Schematic of two doublets or elementary scanning array

UNCLASSIFIED

The combination of four elements illustrated in Fig. 7 can be considered as an elementary scanning system since the phase of one doublet can be changed with rotation while holding the phase of the other doublet fixed. For example, if the phase of the doublet containing spirals 2 and 4 is changed relative to the doublet containing spirals 1 and 3, the beam is caused to scan horizontally in the X'X plane. Similarly, if the phase of the upper two spirals is changed relative to the lower two spirals, the beam scans vertically. Additional groups of four spirals may be added to produce narrower beams while retaining linear polarization of the same direction in both principal planes.

A broad-band linearly polarized radiator of variable phase can be obtained by combining a single spiral with a corner reflector, or right-angled trough, open at the ends (Fig. 8). This results in a virtual doublet because the spiral radiates right-hand circularly polarized energy in one direction and left-hand circularly polarized energy in the opposite direction. The sides of the trough then reflect two spirals of opposite sense which are equally energized. Any rotation of the single spiral will result in simultaneous phase advance or retardation of both images. Constant direction of polarization is therefore maintained and only the phase is changed by spiral rotation. An examination of Fig. 8a will show that those radiated components which appear vertical from the end view will cancel in the far field while the horizontal components will add, with due regard to space phasing, when the spiral lies in the plane bisecting the corner reflector. Direction of polarization for such an arrangement will always be along the axis of the trough. Separation of the two images will be determined by S, the distance of the spiral above the vertex.

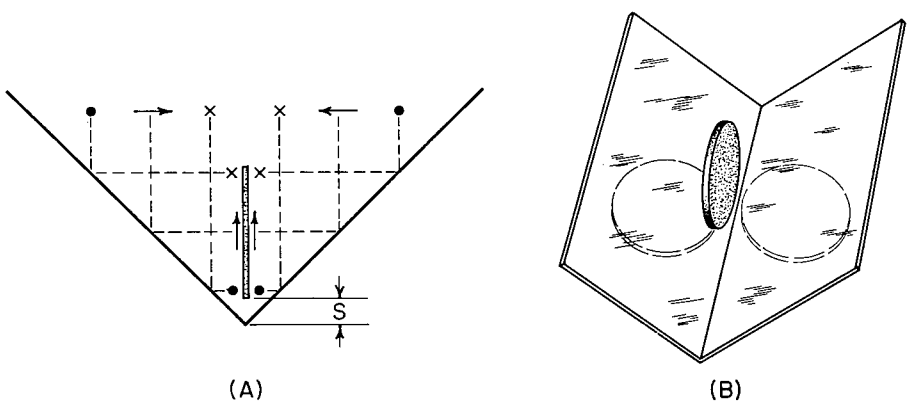

Fig. 8 - Spiral in a trough

Two spirals of opposite sense placed longitudinally along the trough produce a condition similar to the two-doublet or elementary scanning array previously described in that there is symmetry about the two principal planes. Phase change is simpler since rotation of only one spiral accomplishes the same end as rotating both spirals in the two-doublet array. Also there are fewer initial adjustments required with a trough array: the direction of polarization is predetermined so it does not have to be set initially, nor will it change during adjustments; phasing adjustments are made by changing half the number of elements since one spiral in a trough appears in the far field as two spirals of opposite sense.

Further interesting results develop when a parasitic spiral is placed along the same axis as, and relatively close to, a driven spiral (Fig. 9). The field radiated from the parasitic spiral will always be of opposite sense from that radiated from the driven spiral, giving rise to a combined field whose polarization varies from near linear to circular, depending upon the degree of coupling between the parasitic and driven spirals. The

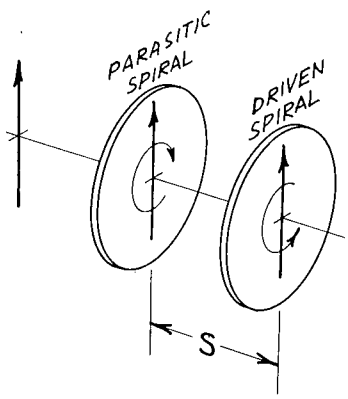

Fig. 9 - A parasitic spiral in front of and close to a driven spiral

behavior of the parasitic spiral differs from the driven spiral in that the phase of the reradiated energy from the parasitic spiral changes by twice the angle of rotation (rotation signifying here rotation of the parasitic element about its axis with respect to the field incident on the parasite). This implies that rotation of the parasite rotates only the major axes of the combined field ellipse; furthermore, the polarization which is assumed along the major axes of the ellipse rotates linearly with rotation of the parasite. By the same token, rotation of the driven element results only in a change of phase of the combined fields.

The parasitic spiral can presumably be of either sense, regardless of the sense of the driven element, and yet reradiate circular polarization of opposite sense from that of the driven element. This is true because a circularly polarized field incident on a given spiral will cause currents to flow either in toward the center or out toward the edge of the spiral, the direction of the current flow being a function of the sense of the incident field as well as the sense of the parasitic spiral. Currents reaching either unterminated end of the spiral would be reflected and travel back out to be reradiated in a sense opposite to that which was received. This means, of course, that linear polarization incident on a parasitic spiral will be reradiated as linear, since a linear field incident on a spiral will cause equal currents to flow in opposite directions.

If sufficient coupling between a driven spiral and a parasitic spiral can be obtained (and this would appear possible) such that the parasite radiates a field equal to that of the driven spiral, the combined fields would be linearly polarized. The direction of polarization would be fixed by the parasite while phase would be determined by the driven element. Such an arrangement could be used in a broadside scanning array where scanning would be accomplished by programming rotation of the driven elements only.

EXPERIMENTAL RESULTS

The following experimental evidence is preliminary and is intended to illustrate principles only. All measurements were made at or near 1000 Mc.

A scanning array comprising eight spiral elements arranged as four doublets was assembled as illustrated in Fig. 10. A photograph of this array appears in Fig. 11. Height of the spirals above the ground plane was made adjustable. It can be shown that the array factor in the ϕ plane for this arrangement, assuming uniform illumination and all spirals to have perfect circularity, can be expressed as

$$E_p = 4Ee^{j3m/2} \quad [\cos 3(\gamma \pm \beta) + \cos(\gamma \pm \beta)] \tag{1}$$

UNCLASSIFIED

where

$$\gamma = \frac{\pi \text{ a } \sin \phi}{\lambda}$$

$$\beta = \frac{m}{2}$$

and

E is the amplitude from one spiral

a is the doublet separation

ϕ is the angle measured from the normal

m is the progressive phase angle change across the array.

For example, if the phase of the first doublet is allowed to remain unchanged while the phase of the second doublet is advanced an angle θ, then the third doublet is advanced 2θ, and the fourth doublet advanced 3θ. This particular phase progression would result in a scan of almost $\theta/2$ degrees for an element spacing of $\lambda/3$. Equation (1) neglects a negatively scanned beam which results from any ellipticity of the spirals. The spirals actually used in the array had ellipticity ratios ranging from 0.5 db to 1.5 db, and no effort was made to improve them beyond this point.

A plot of Eq. (1) for a $\lambda/3$ doublet spacing and uniform illumination appears in Fig. 12. A doublet spacing of approximately 0.4λ was actually used in this first array even though a spacing as small as $\lambda/3$ could have been employed.

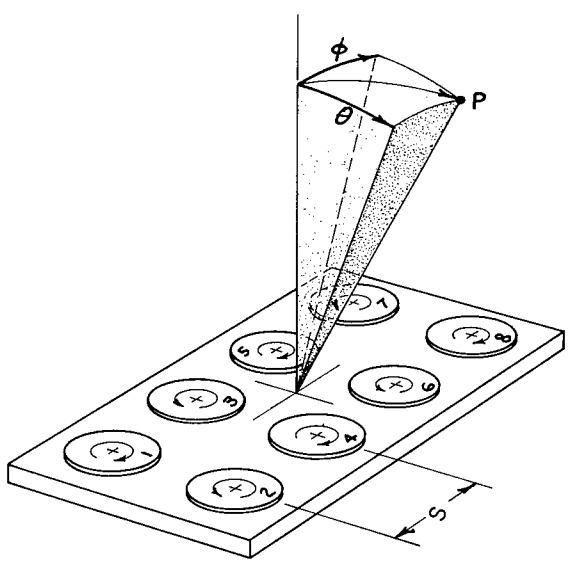

Fig. 10 - Schematic of four-doublet broadside scanning array

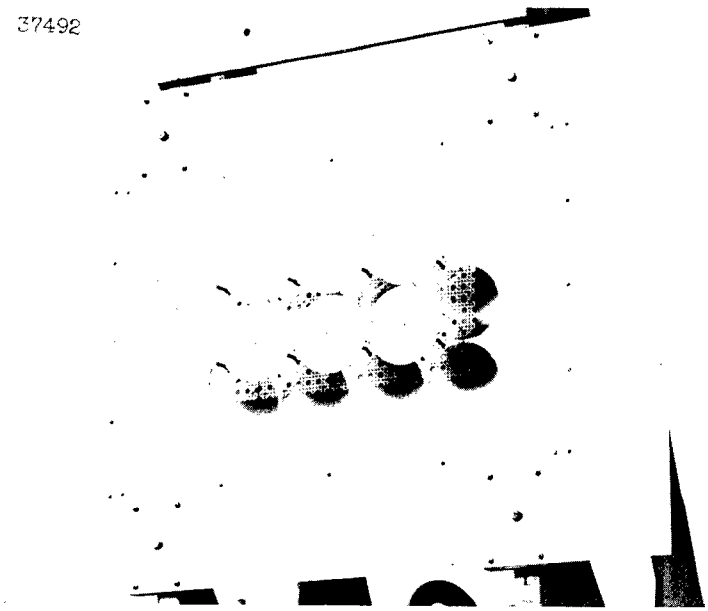

Fig. 11 - Four-doublet array

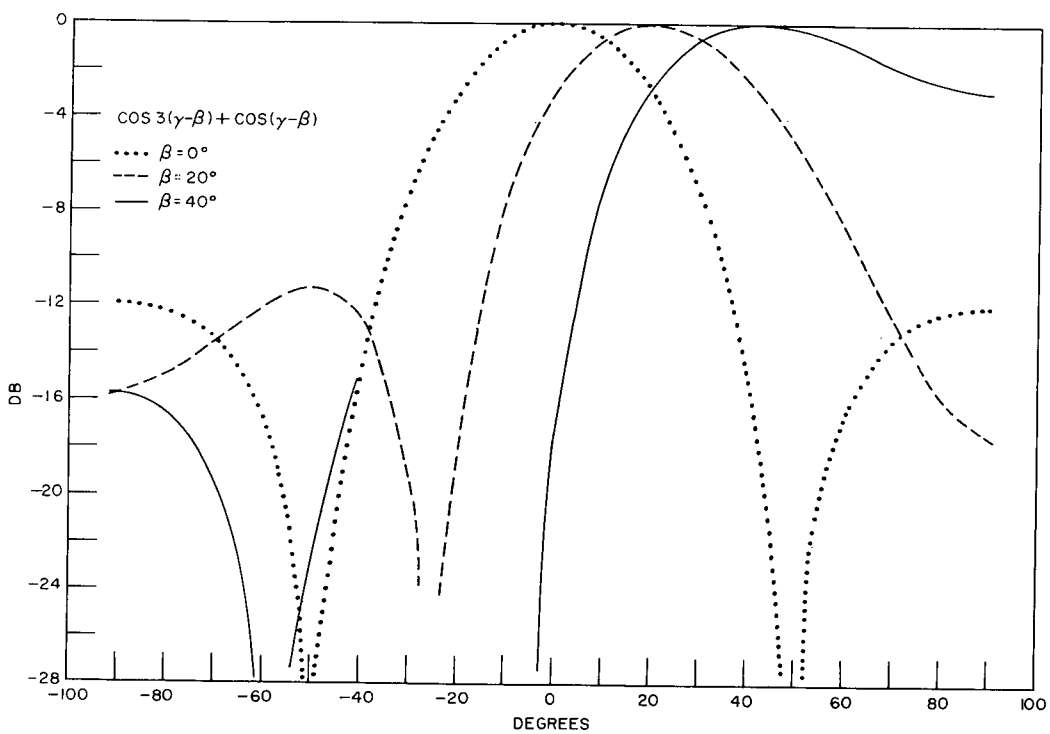

Fig. 12 - Four-doublet array factor for λ/3 doublet spacing

UNCLASSIFIED

The form factor or primary pattern of a single spiral over a ground plane for several distances of the spiral above the ground plane was measured, the one for a 4-inch spacing at 1000 Mc appears in Fig. 13. It was observed that as the spacing was increased the beamwidth increased until the separation became so large that the beam began to separate into two parts. The behavior is identical to a dipole above ground plane behavior.

In Fig. 14, the theoretical four-doublet array factor is combined with the measured form factor for a spiral separation from ground plane of 4 inches for various values of β. A maximum scan angle of ±40° to 45° appears obtainable.

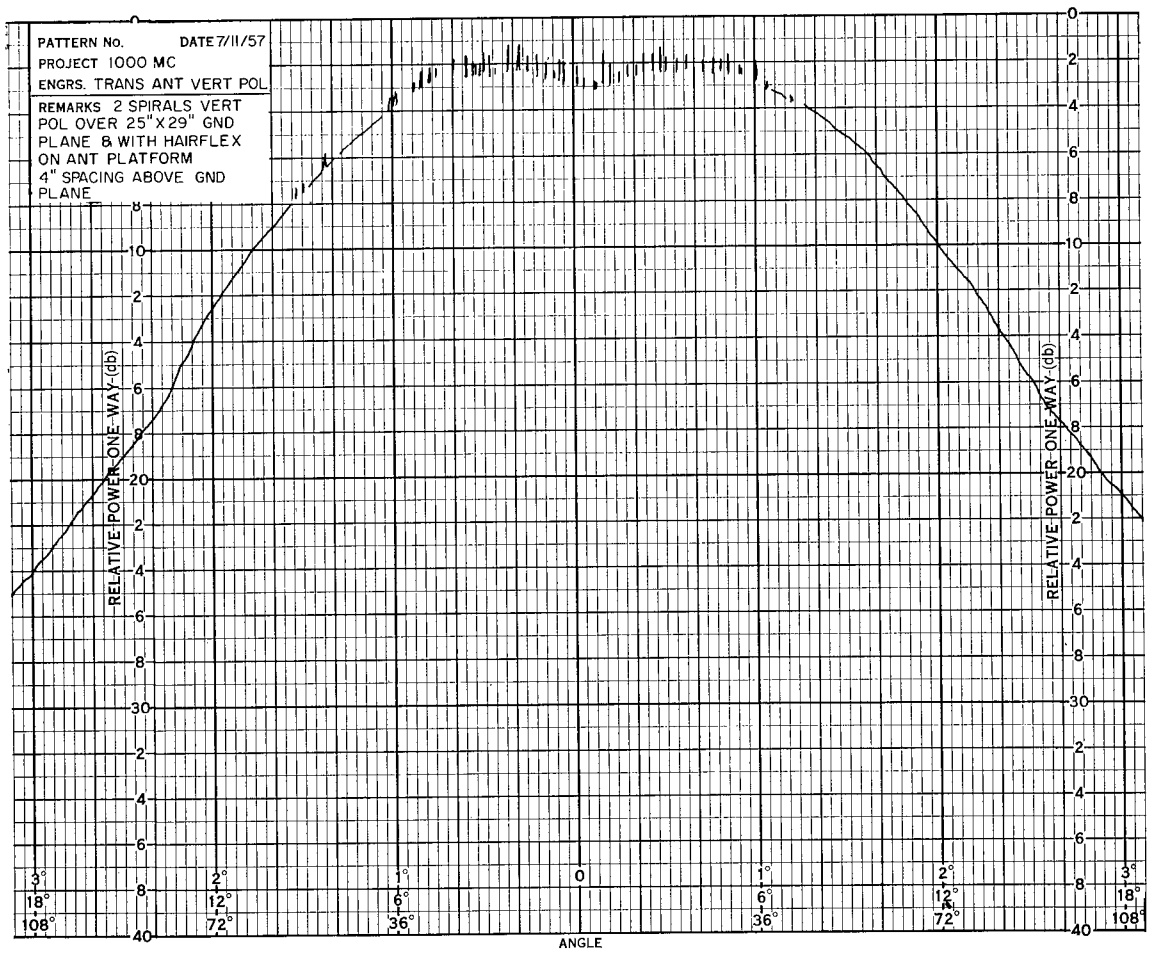

Fig. 13 - Form factor of single spiral over a ground plane

Figure 15 shows the measured results at 1000 Mc for various m of a uniformly illuminated four-doublet spiral array placed 4 inches above a ground plane as pictured in Fig. 11 and adjusted for vertical polarization. The scan angle is here demonstrated to be approximately ±44° with a narrower beamwidth and somewhat higher sidelobes than predicted. The discrepancy can probably be explained by mutual coupling between the spirals and, to a lesser degree, by polarization ellipticity both of which were not assumed in the theoretical considerations. However, with proper control over illumination, a much lower sidelobe level should be obtainable. When the spirals were raised to 4-1/2 inches above the ground plane, a scan angle of ±50° was realized for vertical polarization and approximately ±37° for horizontal polarization. These patterns are shown in Figs. 16 and 17.

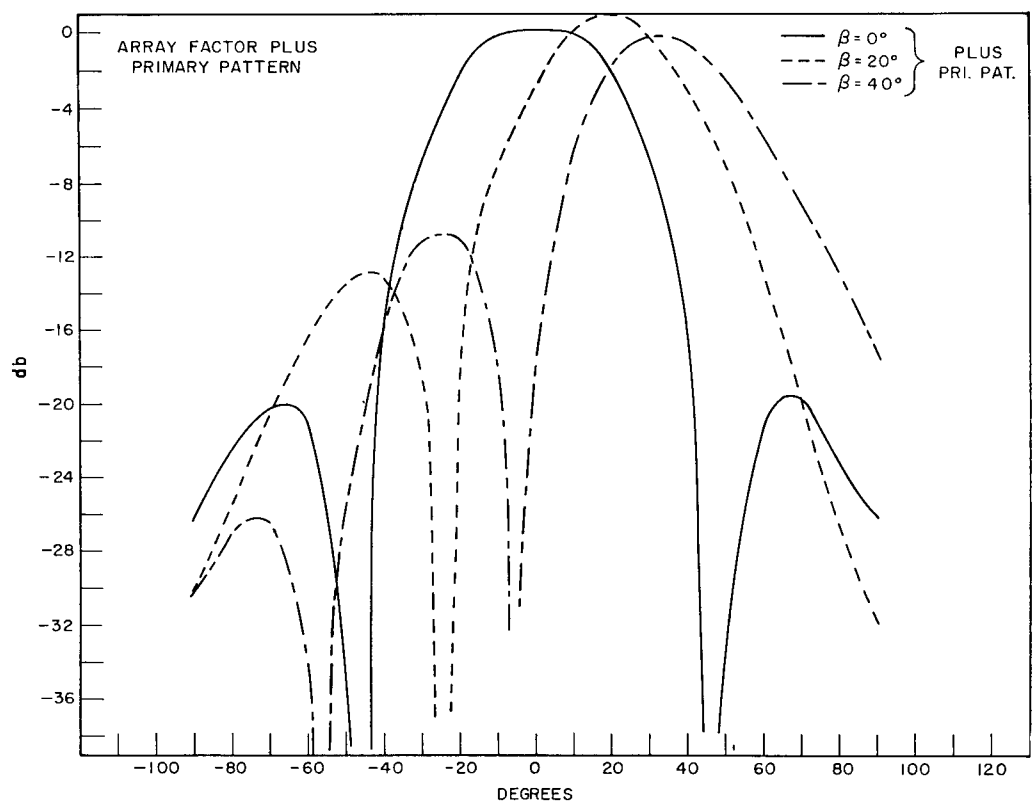

Fig. 14 - Theoretical patterns for four-doublet scanning array 4 inches above a ground plane

UNCLASSIFIED

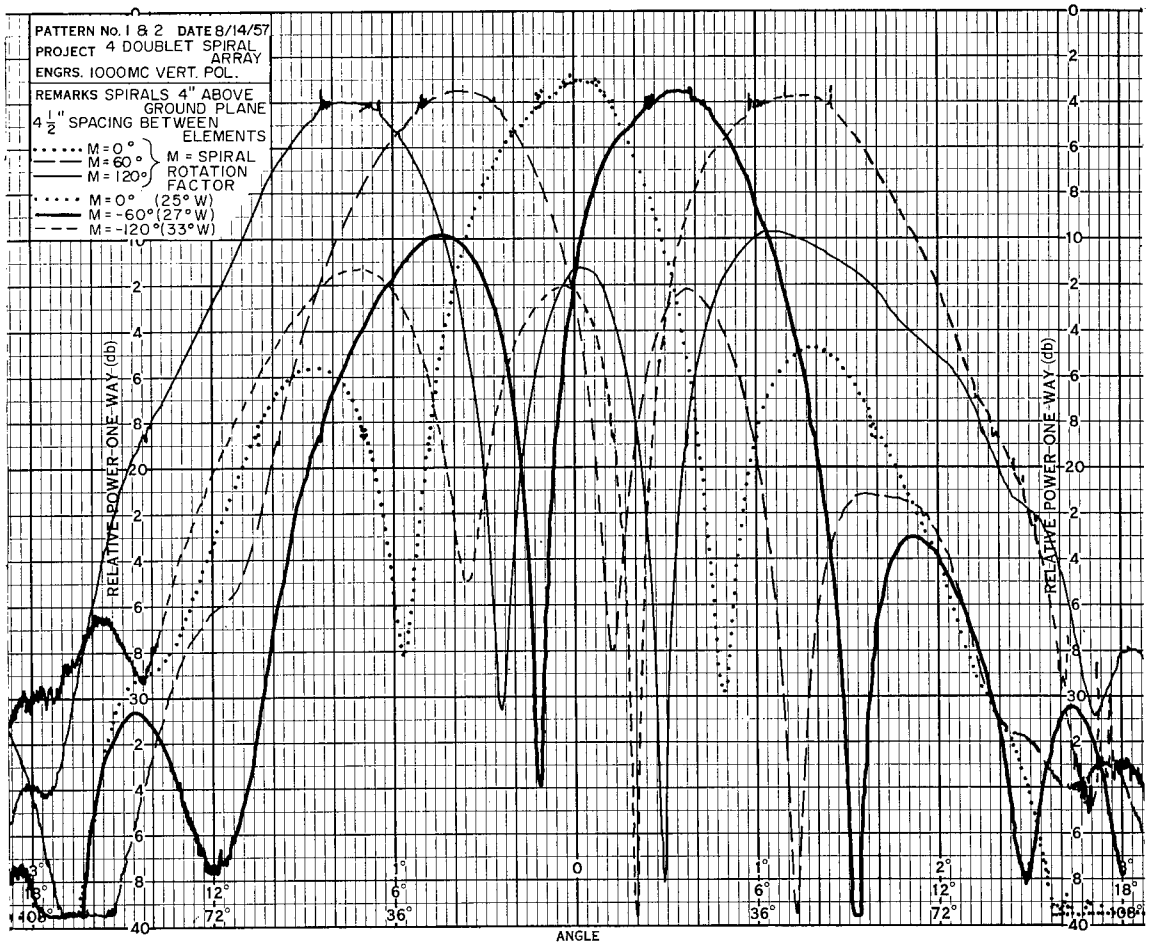

Fig. 15 - Measured patterns of four-doublet scanning array 4 inches above a ground plane at 1000 Mc with vertical polarization

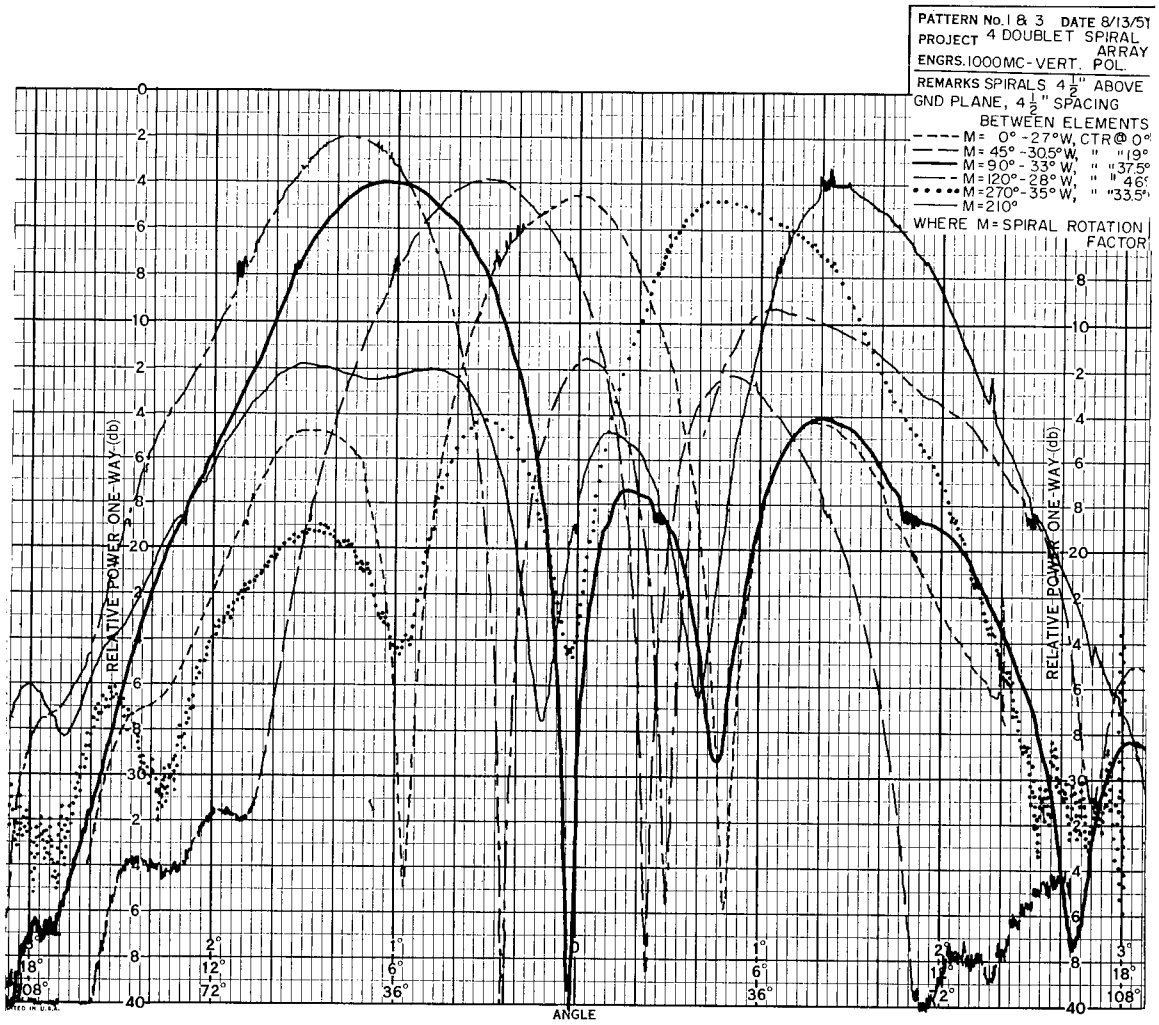

Fig. 16 - Measured patterns of four-doublet scanning array 4-1/2 inches above a ground plane at 1000 Mc with vertical polarization

UNCLASSIFIED

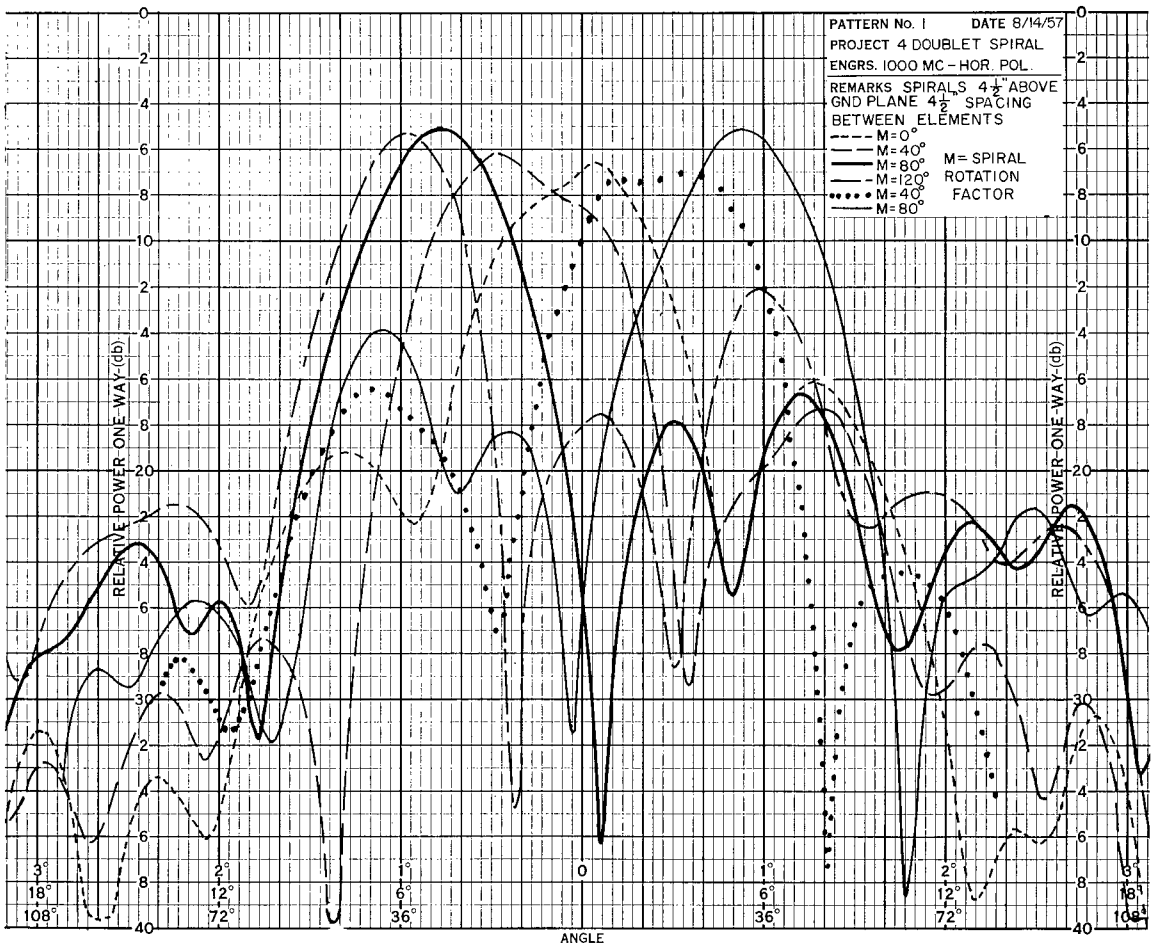

Fig. 17 - Measured patterns of four-doublet scanning array 4-1/2 inches above a ground plane at 1000 Mc with horizontal polarization

Several patterns were taken where the frequency was varied and where the spiral positions were fixed initially for broadside, or zero scan angle. Figure 18 shows these patterns for the four-doublet array with the spirals 4 inches above the ground plane and the polarization adjusted to be vertical. The transmitting dipole was cut for approximately 1000 Mc and was not returned for any other frequency which probably accounts for the drop in gain with increase in frequency. The general increase in sidelobe level within increasing frequency is probably due to the effective increase in doublet spacing which also decreases the array's beamwidth. Apparently one can expect an array pattern to remain unchanged in direction with change in frequency as long as feed line lengths are equal and spirals are essentially identical as was the case for this array.

A right-angle trough open at the ends with four rotating spirals placed inside to simulate the four-doublet array was assembled as pictured in Fig. 19. Figure 20 serves to illustrate that the trough can be made to scan through an angle approximately ±39° which is roughly equivalent to the doublet array with horizontal polarization. Slots cut into one side of the trough to facilitate spiral adjustment were found to radiate appreciably, possibly accounting for the extremely high sidelobe levels. Also the trough was assembled without knowing individual spiral ellipticity ratios which could have been as high as 3 db. Future models will have the adjustment slots eliminated and provision will be made for testing the ellipticity of the spirals before they are installed in the trough.

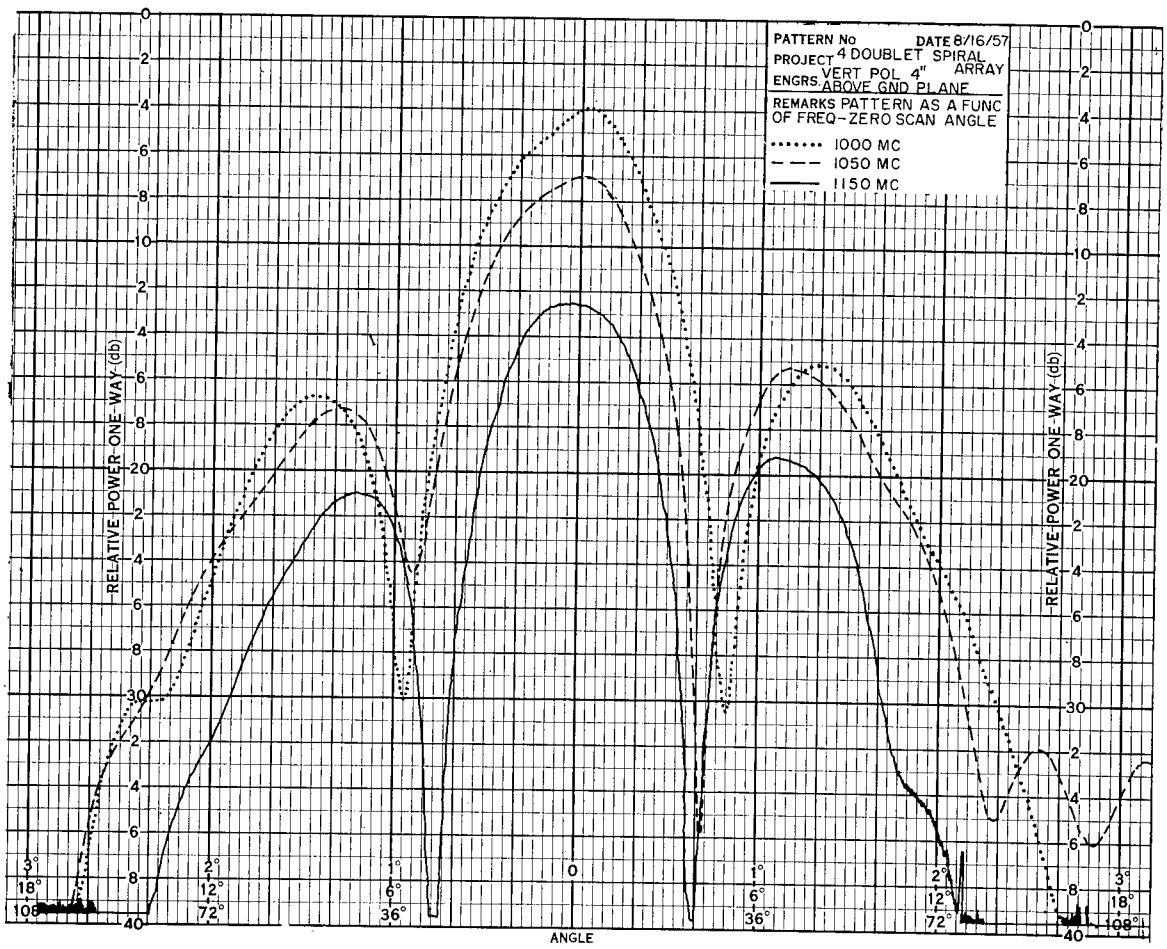

Fig. 18 - Four-doublet array pattern as a function of frequency

UNCLASSIFIED

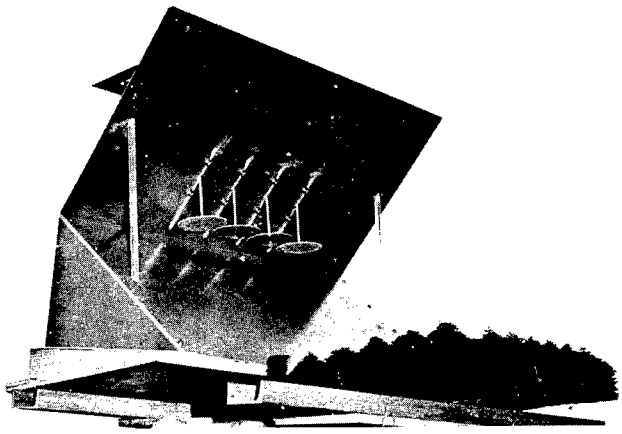

Fig. 19 - Four spirals in a trough array

When a parasitic spiral was placed in front of and reasonably close (approx. 1/2 inch) to a driven spiral, and on-axis ellipticity ratio of greater than 10 db was obtained, indicating reasonably tight coupling between driven and parasitic elements. No appreciable difference was found between a right-hand or left-hand parasitic spiral. When the parasitic element was rotated, the polarization or major ellipse axis was found to rotate through the same angle. When the driven spiral was rotated, the polarization remained fixed but the phase of the combined fields was found to change.

CONCLUSIONS

A doublet composed of two equally excited spirals of opposite sense situated close to each other in the same plane has the unique property of having a far field which is linearly polarized everywhere in space and which can be changed in phase or in direction of polarization by rotation of the spirals.

A broadside scanning array composed of these doublets can be arranged to have essentially the same direction of linear polarization in the two principal planes and can be caused to scan some ±50° for one polarization and some ±37° for the other polarization.

A right-angled trough with spirals reduces the number of spirals used in the scanning doublet array by a factor of one-half but predetermines the direction of polarization. Preliminary results indicate a maximum scan angle of approximately ±39°.

A parasitic spiral of any sense placed along the axis of, and relatively close to, a driven spiral of any sense gives rise to an elliptically polarized far field, where the orientation of the ellipse of polarization is controlled by rotation of the parasitic element alone and the phase of the far field is controlled by rotation of the driven element alone.

ACKNOWLEDGMENTS

The author wishes to express his thanks to Dr. Arthur E. Marston for the original ideas expressed in this report and for his continued interest. Thanks also to Mr. Donald J. Berryhill of Technical Information Division for the fine printed circuitry required for the experiments.

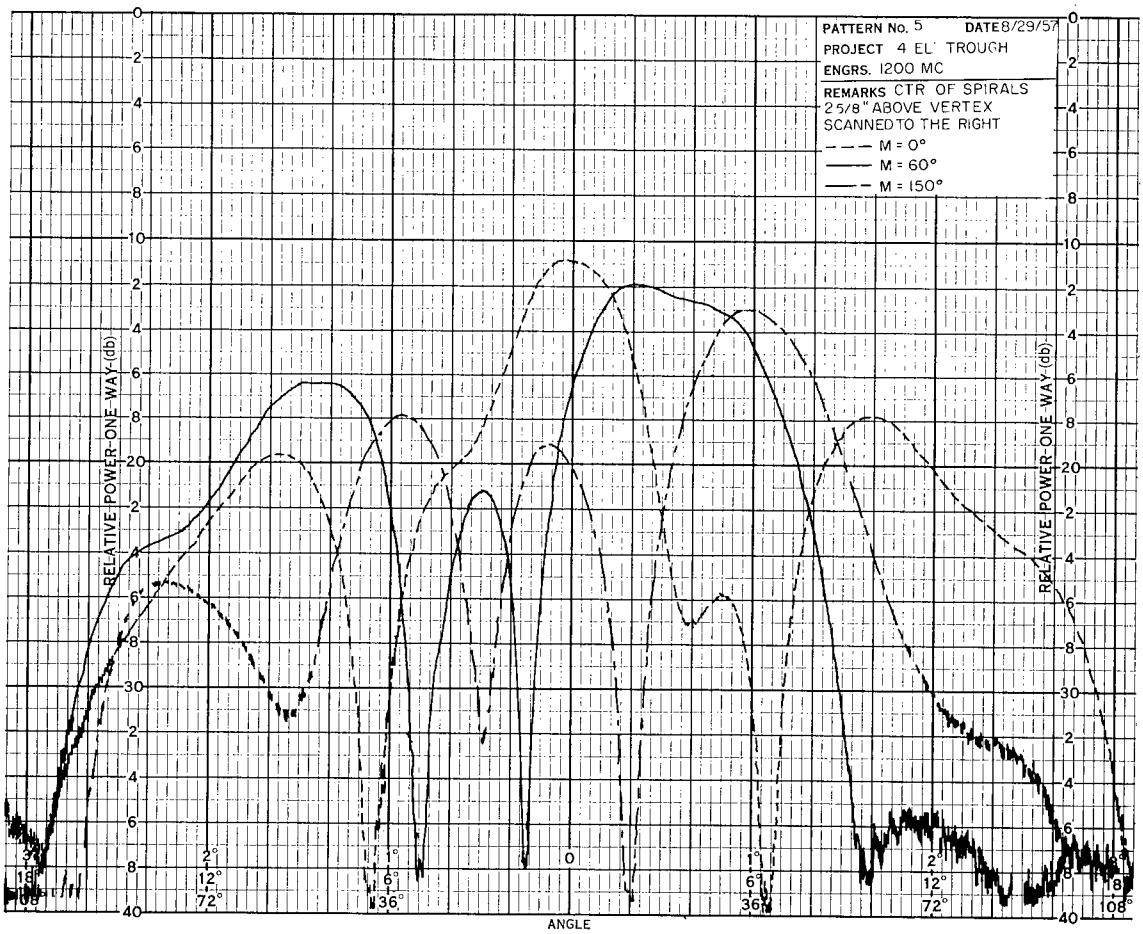

(a) 1200 Mc

Fig. 20 - Patterns of four spirals in a trough scanning array

UNCLASSIFIED

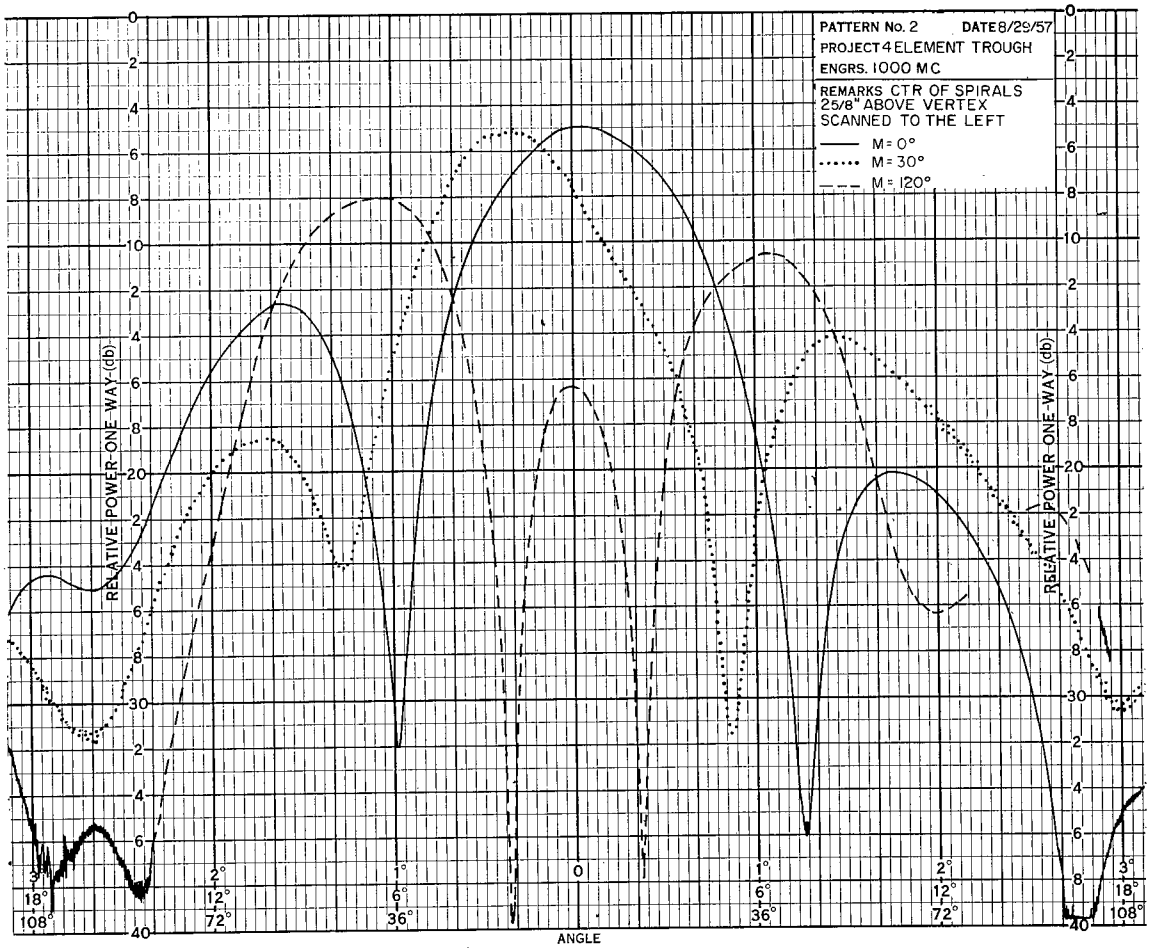

(b) 1000 Mc

Fig. 20 - Patterns of four spirals in a trough scanning array

REFERENCES

1. Minutes of the Spiral Slot Antenna Conference at WADC, March 1-2, 1955, Antenna Design Section 55WCLR-5165 (Confidential)

2. Burdine, B.H., and McElvery, R.M., "The Spiral Antenna," Massachusetts Institute of Technology, Research Laboratory of Electronics Report 1 (Confidential), March 15, 1955; Report 2 (Confidential), April 15, 1955

3. Abstracts of the Fifth Annual Symposium on USAF Antenna Research and Development, Monticello, Illinois, October 16-20, 1955, Wright Air Development Center (Secret)

4. Tipton, C.D., Riley, J.H., and Mayberry, K.L., "An Experimental Investigation and Application of the Spiral Antenna," Temco Aircraft Corporation Report B-50.3.1 (Confidential), October 15, 1956

* * *

NAVY-DPPO PRNC. WASH., D.C.