NRL Report 6440

Using a Parallel-T Network for Developing Quadrature Voltages at Variable Frequencies

S. O. Bailey

Ballistics Branch
Mechanics Division

August 30, 1966

NAVAL RESEARCH LABORATORY
Washington, D.C.

DISTRIBUTION OF THIS DOCUMENT IS UNLIMITED

CONTENTS

Abstract 1

BACKGROUND 1

INTRODUCTION 2

ANALYSIS OF A PARALLEL-T NETWORK PERTAINING TO THE DELIVERY OF TWO VOLTAGES PHASED IN QUADRATURE 3

A SIMPLE FREQUENCY DISCRIMINATOR FOR OPERATION AT AUDIO FREQUENCIES 7

TAKEOFF CATHODE FOLLOWERS 8

FREQUENCY-SELECTIVE AMPLIFIERS 9

A FREQUENCY DISCRIMINATOR WITH A FREQUENCY-SELECTIVE AMPLIFIER 11

QUADRASINE OSCILLATORS 12

PRODUCING A VOLTAGE WITH AN ARBITRARY PHASE SHIFT 14

AMPLITUDE COMPRESSION BY A THERMISTOR 15

LABORATORY MODEL OF A QUADRASINE OSCILLATOR 20

CONCLUDING REMARKS 23

REFERENCES 24

Using a Parallel-T Network for Developing Quadrature Voltages at Variable Frequencies

S. O. Bailey

Ballistics Branch
Mechanics Division

Abstract: Two voltages phased in quadrature are developed at special junctions in a twin-T or parallel-T resistance-capacitance network. Heretofore, this network has been utilized for only its null transmission characteristics. Utilization of these properties remain essential when considering some complete circuits. The two voltages are produced with phase relation that is not sensitive to changes of the driving frequency; however, the amplitude ratio of the two voltages is related to the null frequency.

A variable frequency oscillator which generates two voltages phased in quadrature can be constructed using a symmetric parallel-T network. The operating frequency may be manually selected in somewhat the same manner as presently done with conventional Wien-bridge oscillators. This oscillator may be converted into a generator of voltages with arbitrary phase relations which may be simply controlled.

By making connections to all junctions of the parallel-T network it is possible to construct frequency-selective amplifiers which operate through narrow bandwidths and produce well-filtered quadrature voltages. These voltages should be useful for producing undistorted circular time traces on oscilloscopes.

With connections to all junctions in a parallel-T network it is possible to construct frequency discriminators with output voltages that vary in a predictable manner as the input frequency varies through a maximum-to-minimum ratio of four to one. The bandwidth together with the upper and lower limit of the output voltage can be altered by incorporating a frequency-selective amplifier as a part of the frequency discriminator.

BACKGROUND

Circuits which depend on parallel-T networks for developing two ac voltages phased in quadrature are herein designated the "quadrasine circuits." The quadrasine oscillator was the principal circuit which seemed in demand and involved the principal developmental effort. This oscillator will produce two ac voltages of equal amplitudes phased in quadrature at any frequency which can be easily selected from a wide range (25 cycles to 80 kilocycles per second). The original quadrasine oscillator was designed for fixed frequency operation at 450 cycles per second.

Presently, modern aircraft are equipped with instruments that incorporate servo motors which require two ac voltages phased in quadrature at approximately 400 cycles per second. The fixed frequency quadrasine oscillator was designed for supplying ac power to such a servo motor which was to be used in a self-balancing bridge. This bridge was designed for measuring the short-circuit current generated by an electrochemical cell.

In the Naval Research Laboratory a special type of electrochemical cell has been developed for investigating stress corrosion cracking of high-strength steels. Electrochemically this cell generates an electric current by differential aeration of the electrodes exposed to sea water and air. In a single cell the electrodes are selected specimens of the same steel. The anodic reaction occurs on the smooth, flat surface within the gauge length of a tensile specimen, the anode. After the electrolyte has been placed in the cell, it will generate current which may be increased in response to a mechanical load applied to the tensile specimen wherein the increase of tensile stress is within the elastic limit.

A method of measuring current produced by the cell is to connect an electrical loading resistor to its terminals and measure the potential drop across the resistor. By using loading resistors

NRL Problem R05-24A; Project SF 013-01-14-11630.201. This is an interim report on the problem and pertains to development of a required electronic instrument, a self-balancing bridge. A final report on one phase of the problem—a report concerning the development of a stress-corrosion cell—will follow. Manuscript submitted May 18, 1966.

with decreased resistances, characteristic responses of the cell seem to be altered so that the cell responds sooner after applying a mechanical load and larger increases of current are induced per unit increase of load.

The importance of measuring changes of current delivered by a short-circuited cell is coupled with the fact that when water flows into cracks in steel, the cells that are formed naturally are short-circuited. In the inner extremeties of the cracks the exposures of metal to water and air are such that the metal enters the electrolyte. Because of stress concentrations in the inner extremeties of the cracks, metal enters into the electrolyte at larger rates in response to increased tensile stress. These two effects promote extensions of the cracks when the metal is subjected to tensile stresses. These crack extensions may cause mechanical failures within short periods of time after loading. This kind of failure may occur after subjecting the metal to a load which could be supported indefinitely in dry air. Hence, the measurements of short-circuited currents delivered by the stress-corrosion cells in response to changes of mechanical loads may produce highly informative data concerning the mechanisms of stress-corrosion cracking.

If a cell produces an electric current while no voltage exists between its terminals, this current can be regarded as the short-circuit current. Usually it is possible to construct an effective bridge that incorporates the cell and produce voltage with a magnitude proportional to the short-circuit current. Such a bridge may be automatically operated by a servo system which maintains zero voltage between the terminals of the cell.

Before manufactured instruments which could perform as self-balancing bridges were available for use, steps were taken to design and construct an electromechanical servo system for recording variations of the short-circuit current. Previous experience with other servo systems indicated that balancing operations could be made dynamically very stable if two independent power sources were used for supplying energy to the motor windings; and in order to develop equal armature torques without regard to the direction of rotation, voltages supplied to the windings should always be phased in quadrature. A fixed frequency quadrasine oscillator was developed for providing the two quadrature voltages. One voltage was to be used for operating a chopper that would convert a dc error signal to a square wave signal, and the other voltage was to be made available for power amplification. Output from the power amplifier was to be connected to one winding in the motor, while the amplified square wave signal was to be connected to the other winding. Since these voltages would have been in quadrature, the motor would have been effectively driven when an error signal was available. Except for the quadrasine oscillator this servo system was modeled after that described by Marsh and Schaschl (1).

INTRODUCTION

It is possible to make connections to a parallel-T network to obtain quadrature voltages. These connections are made to the two "quadrature terminals," which are the two extra junctions left when connections are made to the network for using its null transmission properties. Ordinary use of the network does not require any connections to the quadrature terminals.

The null transmission characteristics of the parallel-T network have been used in many types of circuits. Some of these applications have been for RC oscillators (2), frequency-selective amplifiers (3), and notch filters for antihunt control in servo systems (4).

Some interesting circuits can be constructed by using the quadrature terminals of the parallel-T network. It is not necessary to employ the null transmission properties in all such circuits. A few circuits which have been constructed and tested are: a variable frequency oscillator that will generate two voltages phased in quadrature even though the operating frequency is changed by a ratio of ten to one through manipulation of a single control, frequency-selective amplifiers which filter harmonics contained in distorted sinusoidal waves and provide two voltages phased in quadrature, a phase shifting system for delivering a voltage at any phase that will remain essentially unaltered even though the operating frequency is changed through a wide range, and frequency discriminators which will operate reliably at audio and ultrasonic frequencies.

A question could arise concerning whether voltages on the quadrature terminals are still

phased in quadrature when the network is driven by voltages at frequencies other than the null transmission frequency. When a symmetric parallel-T network is used and the driving frequency is the same as the null frequency, amplitudes of the quadrature voltages are equal. When the driving frequency is different from the null frequency, the quadrature voltages follow the relation

$$E_2 = j\gamma E_1,$$

where E_1 and E_2 are the quadrature voltages, γ is ratio of the driving frequency to the null frequency, and $j = \sqrt{-1}$. This voltage relation, which indicates that the voltages remain in quadrature but that the ratio of their amplitudes equals the ratio of the driving frequency to the null frequency, is analytically derived in the next section. Experimental tests have confirmed the theoretical analysis.

Connecting electrical attachments to quadrature terminals of a parallel-T network adds attractive versatility in the use of the network in a variety of circuits. Some of the apparent possibilities have attracted some exploratory investigations, and the accrued results are reported herein.

ANALYSIS OF A PARALLEL-T NETWORK PERTAINING TO THE DELIVERY OF TWO VOLTAGES PHASED IN QUADRATURE

The parallel-T network is recognized as a resistance-reactance filter (5). The best-known property of the network is that a sinusoidal voltage, varying at null frequency, is attenuated to zero when measured between a common lead and the null terminal. This property has been investigated, analyzed, and reported previously (6,7). Inasmuch as frequency-selective amplifiers and oscillators depend on this attenuation property, its importance must not be underemphasized.

Analytical expressions for the quadrature voltages E_1 and E_2 at terminals A and B in Fig. 1 can be derived by applying Kirchoff's voltage law around each of the four current loops, designating the currents in the four mesh circuits as i_1, i_2, i_3, and i_4. The complex reactances of capacitors C_1, C_2, and C_3 are designated as X_1, X_2, and X_3; the resistors and their resistance values as R_1, R_2, and R_3; the input sinusoidal voltage from a constant-voltage generator as e, and the output

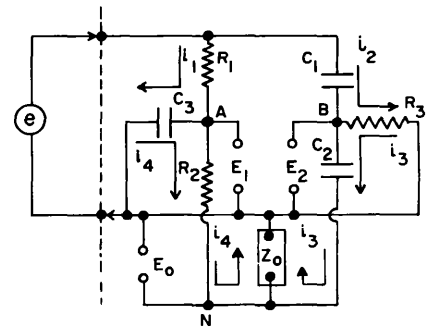

Fig. 1 – A parallel-T network driven by a constant-voltage generator with sinusoidal output voltage e. Quadrature voltages E_1 and E_2 are taken from the "quadrature terminals" A and B respectively. Output voltage E_o is taken from the null terminal N.

voltage as E_o. This voltage E_o is found across the output impedance Z_o connected to the null terminal N. The four independent equations derived by Kirchoff's law are then

$$e = i_1(R_1 + X_3) + i_2(0) + i_3(0) - i_4X_3,$$

$$e = i_1(0) + i_2(R_3 + X_1) - i_3R_3 + i_4(0),$$

$$0 = i_1(0) - i_2R_3 + i_3(R_3 + X_2 + Z_o) + i_4Z_o,$$

$$0 = -i_1X_3 + i_2(0) + i_3Z_o + i_4(R_2 + X_3 + Z_o).$$

Before solving for the four currents, the task can be simplified with other expressions relating currents with the quadrature voltages. As is evident from inspection of Fig. 1, the output voltage is

$$E_o = (i_3 + i_4)Z_o \tag{1}$$

and the quadrature voltages are

$$E_1 = i_4R_2 + E_o \tag{2}$$

and

$$E_2 = i_3X_2 + E_o. \tag{3}$$

From these relations it is seen that solutions for only currents i_3 and i_4 are required. Solutions for these currents can be obtained from the four independent equations by application of Cramer's (8) rule, resulting in

$$i_3 = e\,\frac{[Z_o(R_1R_3 - X_1X_3) + R_3X_3(R_1 + R_2) + R_1R_2R_3]}{\Delta} \tag{4}$$

and

$$i_4 = e\frac{[-Z_o(R_1R_3 - X_1X_3) + R_3X_3(X_1 + X_2) + X_1X_2X_3]}{\Delta}, \tag{5}$$

where Δ is the determinant evaluation of the transformation matrix.

Special interest is attached to the case when the output voltage E_o is zero, which occurs when the radian velocity of the source voltage is ω_0, whose relationship to the null frequency f_0 is $\omega_0 = 2\pi f_0$. As indicated by Eq. (1), E_o is zero when the sum of currents i_3 and i_4 is zero. Thus, Eqs. (4) and (5) can be added and equated to zero, resulting in

$$R_3X_3(R_1 + R_2 + X_1 + X_2) + R_1R_2R_3 + X_1X_2X_3 = 0.$$

Dividing all the terms by R_3X_3 yields

$$R_1 + R_2 + X_1 + X_2 + \frac{R_1R_2}{X_3} + \frac{X_1X_2}{R_3} = 0.$$

This combination of parameters comprises a real sum and an imaginary sum which can each be equated with zero. The resulting expressions are

$$R_1 + R_2 + \frac{X_1X_2}{R_3} = 0 \tag{6}$$

and

$$X_1 + X_2 + \frac{R_1R_2}{X_3} = 0. \tag{7}$$

For this case in which $E_o = 0$, since it holds that $i_3 = -i_4$ and $X_2 = 1/j\omega_0C_2$, Eqs. (2) and (3) become

$$E_1 = i_3R_2 \tag{8}$$

and

$$E_2 = -i_3/j\omega_0C_2. \tag{9}$$

For reasons to be discussed later it is desirable for the magnitudes of the quadrature voltages to be equal. With $|E_1| = |E_2|$, it follows from Eqs. (8) and (9) that

$$\omega_0 = 1/R_2C_2. \tag{10}$$

Inserting this expression for ω_0 into $X_i = 1/j\omega_0C_i$, where $i = 1$, 2, or 3, gives $X_i = R_2C_2/jC_i$, which, when substituted into Eqs. (6) and (7), gives

$$R_1 + R_2 - \frac{R_2^2C_2^2}{C_1C_2R_3} = 0 \tag{11}$$

and

$$R_2C_2\left(\frac{1}{C_1} + \frac{1}{C_2}\right) - \frac{R_1R_2C_3}{R_2C_2} = 0. \tag{12}$$

In frequency-selective amplifiers or oscillators where null frequency of the network is manually chosen by manipulating a single control, ganged circuit elements must be adjusted. In order to maintain consistent relationships between the elements at all positions of the control, sizes of the adjusted elements should involve only simple ratios. If R_1, R_2, C_1, and C_2 are chosen such that $R_1 = R_2 = R$ and $C_1 = C_2 = C$, then Eqs. (11) and (12) become

$$2 - \frac{R}{R_3} = 0$$

and

$$2 - \frac{C_3}{C} = 0,$$

from which it can be seen that $2R_3 = R = R_1 = R_2$ and $2C = 2C_1 = 2C_2 = C_3$. A network constructed following these element relations is a symmetric parallel-T network (9)

After choosing a symmetric parallel-T network, simplified expressions can be written for currents i_3 and i_4. This simplification is enhanced by the following algebraic developments. Let the radian velocity of the driving voltage be expressed as $\omega = \gamma\,\omega_0$, where γ is the ratio of the driving frequency to the null frequency. All the resistive elements are related as stated above; that is $R_1 = R_2 = R = 2R_3$. Likewise, the reactances $X_i = 1/j\omega C_i$ are related in a similar manner, namely $X_1 = X_2 = X = 2X_3$. The ratio of reactance X_2 to resistance R_2 is

$$\frac{X_2}{R_2} = \frac{1}{j\omega C_2R_2} = \frac{1}{j\gamma\omega_0R_2C_2}.$$

But, from Eq. (10), $\omega_0R_2C_2 = 1$. Thus, at any frequency this ratio of reactance to resistance is

$$\frac{X_2}{R_2} = \frac{X_1}{R_1} = \frac{1}{j\gamma} = \frac{1}{u} \tag{13}$$

where the imaginary frequency parameter u equals $j\gamma$.

By using the circuit element relationships, converting all reactances to ratios of reactances to resistances (*e.g.*, letting $X_1 = RX_1/R_1 = R/u$), and properly placing the frequency parameter in expressions for currents i_3 and i_4, Eqs. (4) and (5) reduce to

$$i_3 = \frac{e\,R^2\left(1+\frac{1}{u}\right)\left[Z_o\left(1-\frac{1}{u}\right)+R\right]}{2\Delta}$$

and

$$i_4 = \frac{e\,R^2\left(1+\frac{1}{u}\right)\left[-Z_o\left(1-\frac{1}{u}\right)+\frac{R}{u^2}\right]}{2\Delta}.$$

Placing these expressions for currents in the voltage Eqs. (1), (2), and (3), the reduced expressions are

$$E_o = \frac{e\,R^3\left(1+\frac{1}{u}\right)Z_o\left(1+\frac{1}{u^2}\right)}{2\Delta}, \tag{14}$$

$$E_1 = \frac{e\,R^3\left(1+\frac{1}{u}\right)\left[Z_o\left(1+\frac{1}{u}\right)\cdot\frac{1}{u}+\frac{R}{u^2}\right]}{2\Delta}, \tag{15}$$

and

$$E_2 = \frac{e\,R^3\left(1+\frac{1}{u}\right)\left[Z_o\left(1+\frac{1}{u}\right)+\frac{R}{u}\right]}{2\Delta}. \tag{16}$$

Inspection of Eqs. (15) and (16) reveals the very important relation

$$E_2 = uE_1 = j\gamma E_1. \tag{17}$$

Here is an indication that voltages E_1 and E_2 are phased in quadrature and that the relative amplitudes of these voltages change with frequency. Because of the relations shown in Eq. (17) these voltages are designated as the "quadrature voltages," which are present on the "quadrature terminals" A and B in Fig. 1.

By using the experimental assembly shown in Fig. 2, elliptical cyclograms were produced on the screen of an oscilloscope and photographed for obtaining cyclogrammic records. A Wien-bridge oscillator produced a variable-frequency signal which was reproduced by a cathode follower with a low-impedance output (90 ohms). After a single cyclogram was photographed the frequency of the ac voltage fed into the network was changed, and the new cyclogram was photographed without changing the film exposed previously. Five superimposed cyclograms were recorded together with the graticule grid lines (Fig. 3). The amplitudes of the ac voltages were visually monitored with a General Radio Model 1800-A vacuum-tube voltmeter. Input impedance to the parallel-T network was about 0.5 megohm.

In the oscilloscope (Tektronix Model 536), voltage gains of the amplifiers for the horizontal and vertical axes had been initially adjusted so that equal beam deflections were obtained with the same input voltages. Quadrature voltage E_2 was connected to the vertical axis of the oscilloscope,

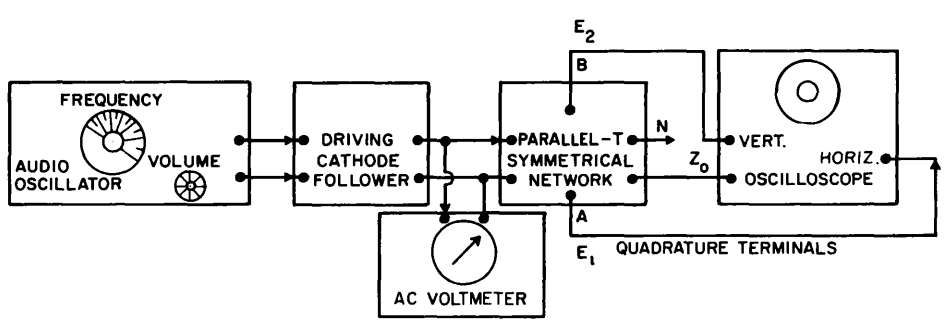

Fig. 2 — An experimental assembly for testing variation of quadrature voltages E_1 and E_2 developed at the quadrature terminals of a parallel-T network as the audio oscillator is changed

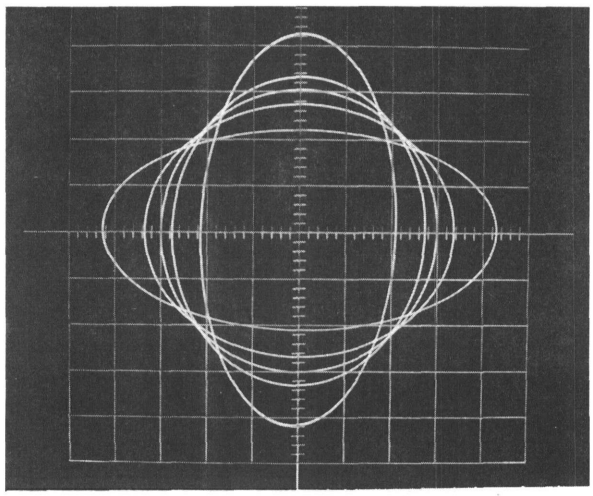

Fig. 3 — Elliptical cyclograms produced by driving the parallel-T network at five frequencies

and quadrature voltage E_1 was connected to the horizontal axis. Care was exercised to align the grid lines of the graticule parallel with the horizontal and vertical axes of the oscilloscope. One of the cyclograms is a circle formed when the operating frequency of the oscillator was 500 cycles per second or the same as the null frequency of the network. When the driving frequency was approximately 250 cycles per second, which by definition is a γ value equal to approximately 1/2, an ellipse was formed having a minor axis (the vertical or E_2 axis) 1/2 as long as the major axis (the horizontal or E_1 axis) as expected according to Eq. (17). The frequency measurements were not precise and reading errors of ± 0.1 division between grids or approximately the width of a grid line were included. In Table 1 are shown computed scope deflections together with measured scope deflections.

The scope deflections are shown as K_1 and K_2, which are equal to a scope deflection factor K (grid units/volt) times the voltages E_1 and E_2. After evaluation of the transformation matrix Δ involving the four mesh currents, Eqs. (14), (15), and (16) reduce to

$$E_o = \frac{e\, Z_o(1+u^2)}{Z_o(1+4u+u^2)+2R(1+u)}, \quad (18)$$

$$E_1 = \frac{e[R+Z_o(1+u)]}{Z_o(1+4u+u^2)+2R(1+u)}, \quad (19)$$

TABLE 1
Comparison of Calculated Scope Deflections with Measured Deflections Shown in Fig. 3

γ	Computed Deflections		Measured Deflections		$\frac{K_1'}{K_1}$	$\frac{K_2'}{K_2}$	γ'
	K_1	K_2	K_1'	K_2'			
1	15	15	15	15	1	1	1
0.8	16.85	13.48	16.75	13.6	0.99	1.00	0.81
0.5	22.20	11.10	21.1	11	0.95	0.99	0.52
1.2	13.74	16.48	13.5	16.8	0.98	1.02	1.24
2.0	11.10	22.20	11.0	21.1	0.99	0.95	1.92

$$E_2 = \frac{ue[R+Z_o(1+u)]}{Z_o(1+4u+u^2)+2R(1+u)}. \quad (20)$$

Before using these equations for computing the scope deflections, the fact that Z_o approached infinity should be taken into account. Considering that fact, the above equations reduce to

$$E_o = \frac{e(1+u^2)}{1+4u+u^2}, \quad (21)$$

$$E_1 = \frac{e(1+u)}{1+4u+u^2}, \quad (22)$$

$$E_2 = \frac{ue\,(1+u)}{1+4u+u^2}. \quad (23)$$

The scope deflections were computed by noting that when u equals j (that is, γ equals 1), the radius of the circle was 15 grid divisions. It follows that this radius represents a driving voltage e which could deflect the beam 42.4 divisions (if applied directly to the scope). Thus 42.4 is Ke.

It appears that unknown frequencies can be measured using this technique once the null frequency of the network is known. Since the major and minor axes of the ellipses are parallel with the horizontal and vertical axes of the scope, the unknown frequency can be calculated by using the relation

$$f = \frac{K_2}{K_1} f_0. \quad (24)$$

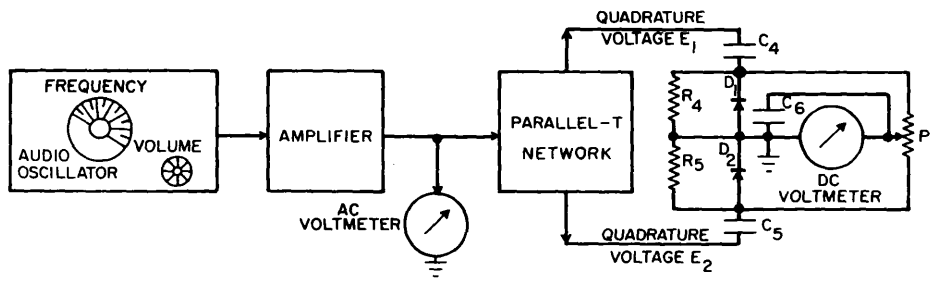

Fig. 4 — Use of the quadrature voltages from a parallel-T network in a simple frequency discriminator

A SIMPLE FREQUENCY DISCRIMINATOR FOR OPERATION AT AUDIO FREQUENCIES

A simple frequency discriminator can be constructed using the quadrature voltages from a parallel-T network. In Fig. 4 is shown a block diagram of an experimental assembly together with a frequency discriminator circuit. Such a circuit is operable if in the parallel-T network the resistors are smaller than 500 kilohms and the capacitors larger than 500 picofarads.

In the discriminator circuit the diodes can be type 1N100A solid state diodes. Potentiometer P should contain at least four times the resistance of R in the network. Capacitors C_4 and C_5 outside the network can be equal and contain 0.01 μf capacitance for operation in the midaudio frequencies. Resistors R_4 and R_5 in the discriminator circuit can contain about 1.5 megohms each. When the type 1N100A diodes are used, the peak input amplitude should not exceed 70 volts.

A conventional Wien-bridge oscillator and an audio amplifier with a low output impedance (about 500 ohms) can be used for driving the parallel-T network. A Ballantine model 310-A electronic voltmeter or a General Radio type 1800-A vacuum-tube voltmeter performed satisfactorily for measuring the ac voltage fed to the network.

Before a frequency run was made the leads to capacitors C_4 and C_5 were detached from the network and placed on the output terminal of the amplifier. Since these capacitors were connected to the same voltage source, they acquire equal but opposite potential differences between their terminals. The arm on the potentiometer (P) was adjusted until zero voltage was indicated on the dc voltmeter. A General Radio type 1800-A vacuum-tube voltmeter was satisfactory for measuring the dc voltage developed by the discriminator.

After this zero adjustment was completed the capacitor leads were attached to the quadrature terminals on the network and a frequency run was made. With a symmetrical parallel-T network no dc voltage would be indicated by the vacuum-tube voltmeter at null frequency. When the driving frequency was varied, the dc voltage changed even though the voltage shown on the ac voltmeter was maintained constant. The storage capacitor C_6 was helpful for retaining peak charge so that maximum voltage was indicated on the dc voltmeter. This capacitor contained approximately 10 times the capacitance of C_4.

In Table 2 are shown observed data acquired by changing the operating frequency of the

TABLE 2
Computed Response and Observed Data of a Simple Frequency Discriminator

γ	Computed K_{dc} (volts)	Observed K'_{dc} (volts)	$\frac{K'_{dc}}{K_{dc}}$
1.0	0	0	1.00
0.8	3.37	−3.6	1.07
0.5	11.10	−11.1	1.00
1.2	2.75	2.78	1.01
1.5	6.23	6.50	1.04
1.8	9.26	9.45	1.02

oscillator. Amplitude of the input voltage to the network was adjusted so that when $\gamma = 1/2$, output voltage in volts from the discriminator K_{dc} was equal to the number of beam deflection divisions on the scope found by subtracting the values of $|K_2|$ from $|K_1|$ shown in Table 1. This procedure simplifies the comparisons of output voltages from the discriminator with corresponding computed scope deflections.

It is possible to derive expressions for the output dc voltages. Reverting to Eqs. (22) and (23) scope deflections K_1 and K_2 can be computed for the quadrature terminals. These expressions are

$$K_1 = KE_1 = \frac{(1+u)Ke}{1+u^2+4u} = \frac{(1+j\gamma)Ke}{1-\gamma^2+4j\gamma}$$

and

$$K_2 = KE_2 = \frac{u(1+u)Ke}{1+u^2+4u} = \frac{j\gamma(1+j\gamma)Ke}{1-\gamma^2+4j\gamma}.$$

The output dc voltage depends on the difference between the magnitudes of K_2 and K_1. A dc output voltage proportional to the scope deflections can be computed as

$$K_{dc} = |K_2| - |K_1| = \frac{(\gamma-1)\sqrt{1+\gamma^2}\,Ke}{\sqrt{(1-\gamma^2)^2+16\gamma^2}}.$$

In Table 2 results of these computations are shown for each value given to γ. Amplitude of the input was maintained constant at 42.4 volts.

These observed and computed output voltages are plotted in Fig. 5. The largest error between computed and experimental data points is 7%. No effort was made to determine the effect of wave distortion on the output voltage.

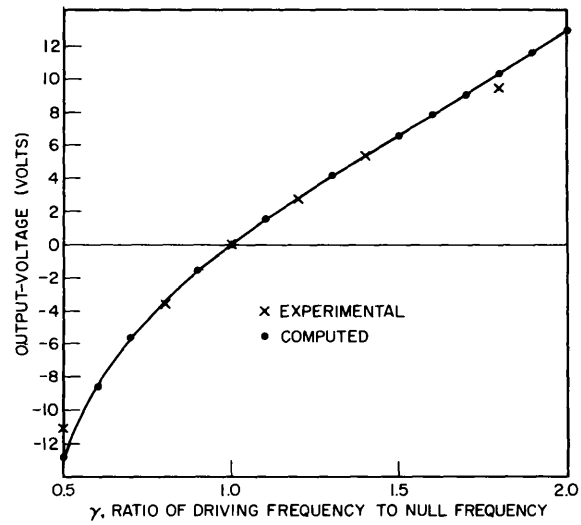

Fig. 5 — The output-voltage characteristics of a simple frequency discriminator

TAKEOFF CATHODE FOLLOWERS

Derivations of quadrature voltages were developed assuming that electrometer attachments are connected to the quadrature terminals. In order to properly use the quadrature voltages, an impedance transformation device must isolate any external loading elements from the network. Clearly, any circuit elements connected between the common lead and either quadrature terminal become elements added to the network. Cathode followers are widely employed for circuit isolation.

Some parallel-T networks are used for null transmissions at low frequencies. Often in practice it is desirable to select the null frequencies by adjusting ganged capacitors. Since the ganged capacitors usually are of low capacitance (20 to 500 picofarads), operations at low frequencies require resistors of large values (*e.g.*, 15 megohms) in the network. For such cases only takeoff cathode followers with very large input impedances (larger than 30 megohms) are used (10).

The effective input resistance of a cathode follower can be made larger than the grid resistor by returning the grid resistor to a tap on the cathode resistor R_k. Effective input resistance R_i of a cathode follower with a grid resistor R is

$$R_i = \frac{R[r_p + (1+\mu)R_k]}{r_p + (1+\alpha\mu)R_k},$$

where r_p is the dynamic plate resistance of a tube, μ is the amplification factor, and α is a fractional part of R_k between the cathode and the grid resistor tap connection.

In some of the experimental circuits herein described, the effective input resistances of the takeoff cathode followers are approximately 36 megohms. The output impedance of these cathode followers are approximately 500 ohms.

The type of tube used was a 6188/6SU7GW manufactured by Tung-Sol Electric Inc.

FREQUENCY-SELECTIVE AMPLIFIERS

Frequency-selective amplifiers incorporating parallel-T networks have been investigated previously (2,11,12). In Fig. 6 is shown a rudimentary block diagram of a feedback amplifier with two input channels. Output voltage from the amplifier depends on linearly combining and amplifying the two input voltages. Amplifications of the two inputs may be of different magnitudes and involve different phasing characteristics.

Heretofore cyclograms produced by connecting an oscilloscope directly to the quadrature terminals of a parallel-T network were analyzed. When the cyclograms were produced by a frequency-selective amplifier (Fig. 7), maximum amplitudes of the quadrature voltages were automatically suppressed. This effect is indicated in the cyclograms shown in Fig. 8. The frequency-dependent relation involving the amplitude ratio of the two voltages remains the same (see Eq. (24)).

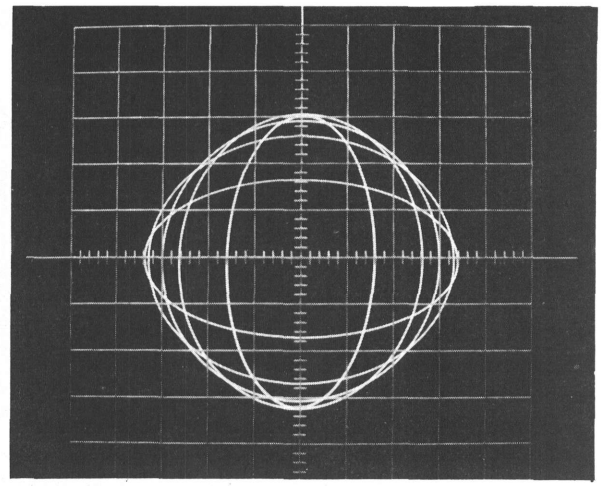

Fig. 8 — Cyclograms produced at five frequencies illustrating the amplitude-suppression effect when the parallel-T network is incorporated in a frequency-selective amplifier

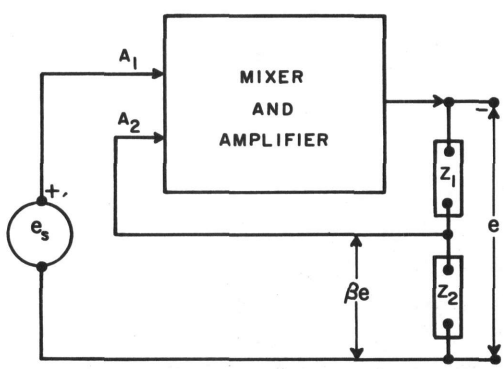

Fig. 6 — A rudimentary block diagram of a feedback amplifier where Z_1 and Z_2 may be complex impedances. It is possible that feedback voltage βe is equal to zero at some frequency. In that case, this representation depicts a frequency-selective amplifier.

Amplitude suppressions of the quadrature voltages can be explained by referring to the generalized block diagram in Fig. 6. If the voltage amplifications are of different magnitudes A_1 and A_2, the voltage equation

$$e = -A_1 e_s - A_2 \beta e \tag{25}$$

can be written, where the minus signs indicate 180° phase shifts; and from the potential divider with Z_1 and Z_2 in series, a voltage equal to βe is fed back to the second channel. The transmission

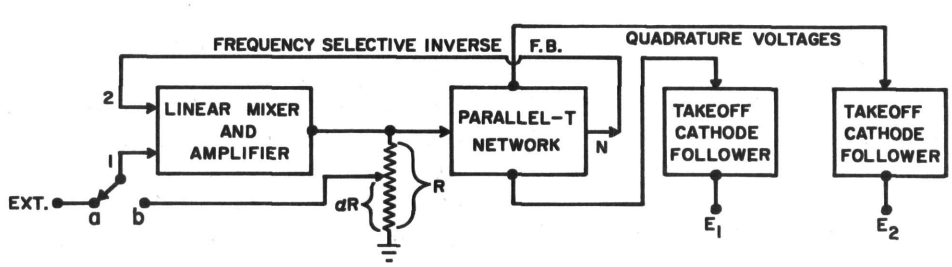

Fig. 7 — A functional diagram of a simple frequency-selective amplifier which can be converted to an oscillator. Quadrature voltages E_1 and E_2 are developed regardless of the mode of operation.

factor β may be a complex quantity with a magnitude which may vary between zero and unity. From the above voltage equation, the output voltage e is

$$e = \frac{-A_1 e_s}{1 + A_2\beta}, \tag{26}$$

where e_s is the input voltage to the amplifier.

For the case where impedances Z_1 and Z_2 are contained in a parallel-T network, Stanton (6) has shown that the transmission factor β can be written as

$$\beta = \frac{Z_2}{Z_1 + Z_2}, \tag{27}$$

which is equivalent to

$$\beta = \frac{E_o}{e} = \frac{1 + u^2}{1 + u^2 + 4u} \tag{28}$$

from Eq. (21). When the expression for β given by Eq. (28) is placed in Eq. (26), the result is

$$e = \frac{-A_1 e_s}{1 + \dfrac{A_2(1 + u^2)}{1 + u^2 + 4u}}. \tag{29}$$

This voltage is same as that fed to the parallel-T network.

Expressions for the quadrature voltages can be derived by considering the output voltage e from the amplifier to be that fed into the network. This development can proceed when Eq. (29) is placed in Eq. (22), yielding

$$E_1 = \frac{-A_1 e_s(1 + u)}{\left[1 + \dfrac{A_2(1 + u^2)}{1 + u^2 + 4u}\right](1 + u^2 + 4u)}$$

$$= \frac{-A_1 e_s(1 + u)}{(A_2 + 1)(1 + u^2) + 4u}. \tag{30}$$

Since E_2 equals uE_1 as previously derived, a similar expression can be written for E_2 which is

$$E_2 = \frac{-A_1 e_s u(1 + u)}{(A_2 + 1)(1 + u^2) + 4u}. \tag{31}$$

Oscilloscope deflections K_1 and K_2 can be computed by allowing

$$K_1 = \frac{E_1}{-A_1} = \frac{(1 + u)\,Ke_s}{(A_2 + 1)(1 + u^2) + 4u} \tag{32}$$

and

$$K_2 = \frac{E_2}{-A_1} = \frac{u(1 + u)\,Ke_s}{(A_2 + 1)(1 + u^2) + 4u}. \tag{33}$$

Deflections on the scope screen follow the magnitudes of K_1 and K_2, where K is a scope deflection factor adjusted so that the product of K times e_s equals 42.4 divisions. In place of the complex frequency parameter u substitute $j\gamma$ in Eqs. (32) and (33). The magnitudes of the scope deflections are

$$|K_1| = \frac{\sqrt{1 + \gamma^2}\,42.4}{\sqrt{(A_2 + 1)(1 - \gamma^2)^2 + 16\gamma^2}} \tag{34}$$

and

$$|K_2| = \gamma|K_1|. \tag{35}$$

In Table 3 are shown scope deflections $|K_1|$ for the horizontal axis and $|K_2|$ for the vertical axis. Magnitudes of the deflections were calculated assuming that the voltage gain of the second channel, A_2, was 2.3.

The horizontal and vertical deflections were measured by placing a divider on the cyclograms shown in Fig. 8. The largest error between the computed values and the observed data is 12%.

Amplitude suppressions of the quadrature voltages (as evidenced by comparing the major axes of the elliptical cyclograms shown in Fig. 8 with those shown in Fig. 3) are caused by the frequency response of the amplifier. In the case where the scope was attached directly to the network, the input voltage to the network was constant; but when using the frequency selective amplifier, the voltage fed to the network is maximum at only one frequency, namely, the null frequency of the network. At other frequencies the amplitudes are attenuated.

TABLE 3
Computed Scope Deflections Compared With Observed Deflections

γ	Computed Values		Observed Values		$\frac{K_1'}{\lvert K_1\rvert}$	$\frac{K_2'}{\lvert K_2\rvert}$	γ'
	$\lvert K_1\rvert$	$\lvert K_2\rvert$	K_1'	K_2'			
1	15	15	15	15	1.00	1.00	1
0.8	15.90	12.72	16.1	13.1	1.01	1.03	0.81
0.5	14.89	7.45	16.7	8.3	1.12	1.11	0.52
1.2	13.19	15.82	12.9	15.63	0.98	0.99	1.21
2.0	7.45	14.89	7.8	15.7	1.05	1.05	2.01

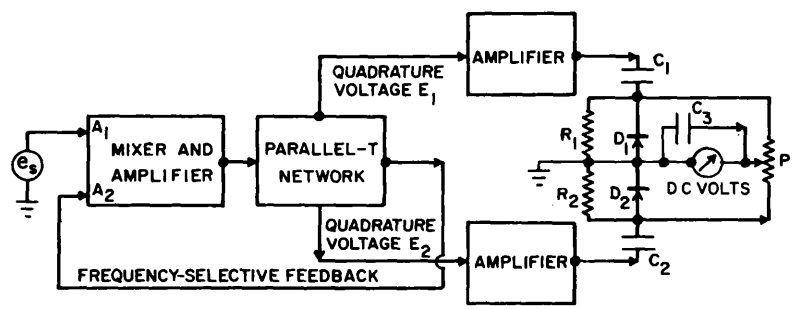

Fig. 9 — A block schematic of a frequency discriminator which incorporates a frequency-selective amplifier

A FREQUENCY DISCRIMINATOR WITH A FREQUENCY-SELECTIVE AMPLIFIER

Even though the major axes of the ellipses were suppressed, the ratios of the major to minor axes were frequency dependent. It is possible to employ these amplitude ratios as a means of deriving different voltages which are dependent only on frequency. In Fig. 9 is shown how a frequency-selective amplifier may be modified by insertion of two other amplifiers and the addition of diodes.

Amplifiers attached to the quadrature terminals of the network should have large input impedances and low output impedances. Also, the amplifiers should have equal voltage gains and have frequency response characteristics such that the bandwidths are larger than the operating band of frequencies. In this circuit, capacitors, resistors, and diodes may be the same as those used in the simple frequency discriminator.

An experimental circuit designed and assembled as indicated above was examined. The accrued data were compared with the computed results as shown in Table 4. The input voltage e_s fed to the A_1 channel was delivered by a Wien-bridge oscillator, and amplitudes of this voltage were manually monitored by observing a Ballantine model 310-A electronic voltmeter. The dc output voltage was registered on a General Radio type 1800-A vacuum-tube voltmeter. The voltage gain of the A_2 channel was 2.3. The null frequency of the parallel-T network was 500 cycles per second.

An expression for the output voltage K_{dc} can be developed using the equations derived for scope deflections. However, the dc voltage depends on the difference between the peak magnitudes of these deflections. Thus, from previously derived expressions the net result is

$$K_{dc} = \frac{42.4\ (\gamma - 1)\ \sqrt{(1+\gamma^2)}}{\sqrt{(A_2+1)^2(1-\gamma^2)^2 + 16\gamma^2}}. \quad (36)$$

TABLE 4
Comparison of Observed Output DC Voltages With Corresponding Computed Voltages

γ	Computed K_{dc} (volts)	Observed K'_{dc} (volts)	$\frac{K'_{dc}}{K_{dc}}$
1.0	0	0	1.00
0.88	1.87	1.84	0.98
0.80	3.18	3.04	0.96
0.60	6.20	6.01	0.97
0.50	7.45	–	–
1.20	2.64	2.50	0.95
1.40	4.53	4.34	0.96
1.60	5.84	5.76	0.99
2.00	7.45	–	–

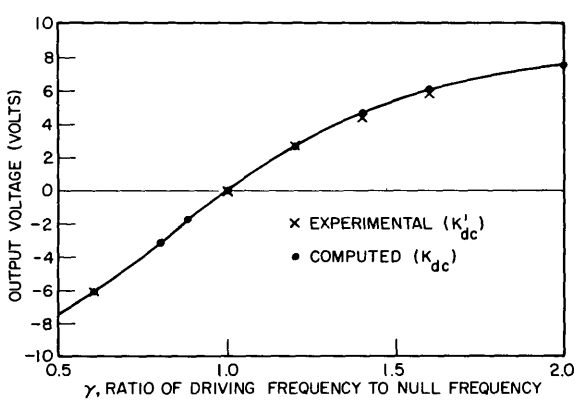

Fig. 10 – Output voltage characteristic of a frequency discriminator incorporating a frequency-selective amplifier

In Fig. 10 the experimental points are seen to be either on or in close proximity to a smooth curve passing through the computed points. The largest error between the computed and the experimental points is 5% and the average error is 3%.

When the feedback channel has larger voltage gain, the maximum amplitudes of voltages forming the ellipses are further suppressed; variations of the dc output voltage from a frequency discriminator are reduced; and the amplifier will act as a better filter for reducing harmonic content of a distorted wave fed into the input channel. As indicated by Fleisher (2), this filtering effect is present because of a large circuit Q.

Frequency-selective amplifiers can be characterized in terms of frequency response bandwidths. The bandwidths are controlled by the circuit Q, which is defined as

$$Q = \frac{1}{\gamma_h - \gamma_l}, \tag{37}$$

where γ_h and γ_l correspond with the high and low half-power frequencies respectively. An expression for Q in terms of voltage gain in the feedback channel can be derived and is

$$Q = \frac{A_2 + 1}{4} \tag{38}$$

when the parallel-T network is symmetric.

In Fig. 11 is shown the circuit diagram of a frequency-selective amplifier. With switch S placed on contact a the circuit is operable as one where A_2 is 10. A signal produced at the null frequency by a Wien-bridge oscillator was connected to the Ext. terminal of the amplifier. Voltages E_1 and E_2 were connected respectively to the vertical and horizontal amplifiers in an oscilloscope. The resulting cyclogram was a circle with a diameter nearly equal to the screen diameter on the cathode-ray tube. This circle seemed perfectly round as noted by use of a divider with the tip of one branch placed on the center. Distortion percentages were not measured.

QUADRASINE OSCILLATORS

In Fig. 12 is shown a block diagram of an oscillator which uses a notched filter (parallel-T network) for determining the frequency of operation. Because the internal impedance Z_i of the amplifier should be considered, all equivalent impedances Z_1, Z_2, and Z_3 in the network should be included in the circuit. Equivalent expressions for impedances Z_1, Z_2, and Z_3 were developed by Stanton (6). When the parallel-T network is symmetric, these expressions are

$$Z_1 = \frac{2R(1 + u)}{1 + u^2}, \tag{39}$$

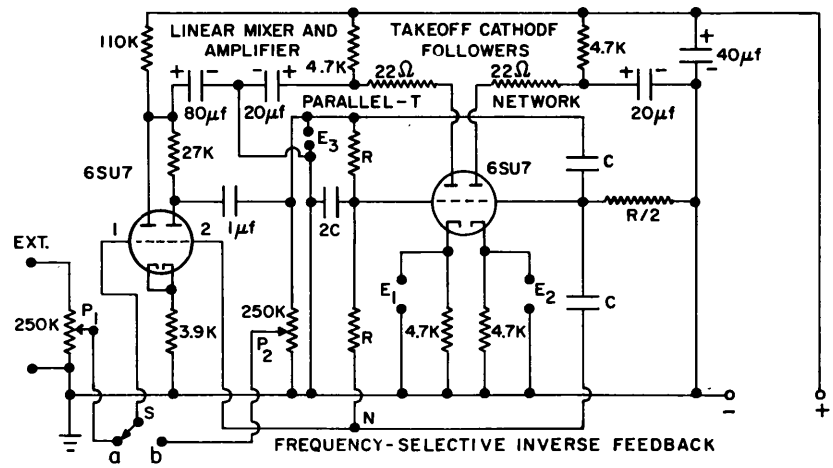

Fig. 11 — A frequency-selective amplifier which can be changed to an oscillator by selecting the alternate position of switch S. This is an economical circuit for either fixed frequency operation or for variable frequency operation through a limited range of frequencies

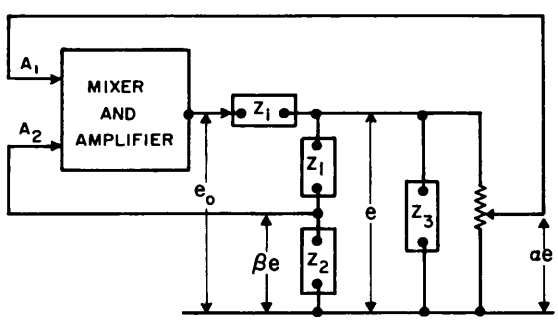

Fig. 12 — A rudimentary block diagram of an oscillator with a notched filter in the inverse feedback path

$$Z_2 = \frac{R}{2}\left(1 + \frac{1}{u}\right), \tag{40}$$

and $Z_3 = Z_2$, where, as before, R is equal to R_1 and R_2 in the network. By allowing $u = j$, it can be seen that impedance Z_1 is infinite when the driving frequency is same as the null frequency. This corresponds with the case where βe equals zero.

For development of the loop gain equation, it is assumed that e_o is a sinusoidal voltage delivered by the amplifier. By inspection of Fig. 12 an expression for output voltage e_o can be written as

$$e_o = A_1\alpha e - A_2\beta e \tag{41}$$

where α is a number of proportion greater than zero and less than one. The plus sign preceding the amplifier channel gain A_1 indicates that there is either a 360° or no phase shift between this input and output of the amplifier. The minus sign preceding A_2 indicates a 180° phase shift. The loop gain of the amplifier is

$$G = \frac{e_o}{e} = A_1\alpha - A_2\beta. \tag{42}$$

If β is equal to zero, the loop gain is maximum and equal to $A_1\alpha$. In an ideal system the internal impedance Z_i is equal to zero and the loop gain is equal to unity. Conditions in such a system satisfy the Barkhausen conditions for an ideal oscillator (13). With Z_i equal to zero, $A_1\alpha$ cannot be much larger than unity without introducing relaxation oscillations, which are usually not sinusoidal.

In common practice the internal impedance Z_i is not zero. For that reason the loop gain will be slightly larger than unity (*e.g.,* 1.05). Reactive components in the internal impedance of the amplifier will cause a change in the overall gain as the operating frequency is shifted (14).

Reverting to the circuit shown in Fig. 11, when switch S is placed on contact b, the circuit becomes an oscillator, provided the arm on potentiometer

P_2 is properly adjusted, which is when the oscillator delivers two sinusoidal voltages E_1 and E_2. A good test of proper adjustment is to check the circular form of cyclograms developed on the screen of an oscilloscope. A point of interest is that the voltage gain of the feedback channel should be about 10. As indicated previously the filtering action of this part of the circuit is useful for reducing harmonic distortion of the generated voltages.

If the operating frequency is increased, the potentiometer arm should be moved away from zero potential. This increases in α is necessary for overcoming the loss in loop gain caused by the series combination of internal impedance of the amplifier Z_i and the input impedance of the network Z_3. Should the frequency be reduced, α must be reduced or the amplifier will be overdriven, thereby introducing distortion of the generated voltage waveform. Low-frequency operation is limited by the input resistance of the takeoff cathode followers. When this grid resistance becomes equal to or less than 1.5 times R of the network, the grid resistance becomes a perceptible part of the network. If the desired operating frequency should cause R of the network to become too large with respect to the input resistance of the takeoff cathode followers, low-frequency operation may be accomplished by increasing the capacitance C in the network.

PRODUCING A VOLTAGE WITH AN ARBITRARY PHASE SHIFT

When the parallel-T network in an oscillator is properly adjusted, an arbitrary selection of the operating frequency will not change the equal-amplitude relation of the quadrature voltages. The fact that these voltages are in quadrature phase relation presents an opportunity for producing a voltage with an arbitrarily chosen phase shift which remains constant even though the operating frequency is changed. Such a mechanism should be useful for measurements of unknown phase shifts, for vector computers, and for time interval measurements.

A simplified phase shift control circuit is shown in Fig. 13. The voltage sources are idealized producers of voltages phased in quadrature and of equal amplitudes. Let a potentiometer with resistance P be connected between voltages E and

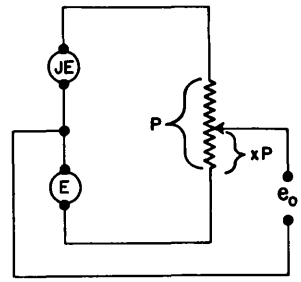

Fig. 13 — A simple phase shifter where the voltage sources produce quadrature voltages with equal amplitudes

jE. By shifting the arm in the potentiometer, the phase relation of output voltage e_o can be varied from zero to 90° with respect to E. With reference to the circuit in Fig. 13, an expression for the output voltage can be written as

$$e_o = [(1 - X) - jX]E, \tag{43}$$

where X is a factor of proportion which can take values $0 \leq X \leq 1$ depending on the arm position with respect to the end terminal of the potentiometer connected to the reference voltage E. In this idealized circuit, resistance of the potentiometer has no bearing on this relation.

Practically, the quadrature voltage sources can be the takeoff cathode followers, provided resistance in the potentiometer is at least 100 times larger than the output impedance of one cathode follower. Resistance of the potentiometer should be chosen so that wave distortion is not introduced. Another important condition is that the arm in the potentiometer should be connected to a loading impedance that is at least 100 times larger that resistance in the potentiometer. A ten-turn Helipot operates satisfactorily as the potentiometer. Usually, a dial with 1000 divisions can be used for indicating X. If the potentiometer has a linear taper, the size of X can be deduced from the dial indications. By knowing X, the angular phase shift can be determined using the relation:

$$\text{Tan } \Phi = \frac{-X}{1 - X}. \tag{44}$$

Ideally, X is not changed by frequency. Practically, as the frequency is increased, there may be some extra phase shift caused by a small capacitive load across the terminals where e_o is produced.

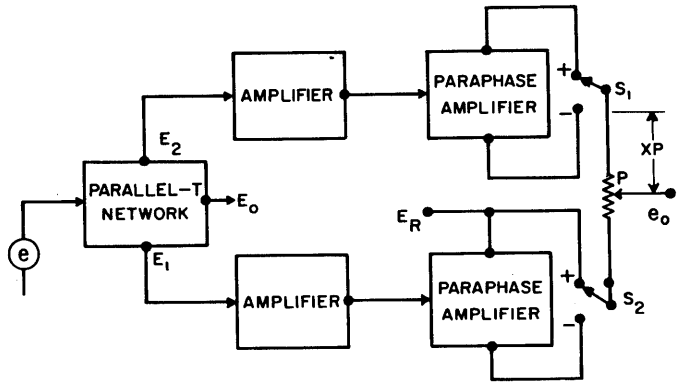

Fig. 14 — A block diagram indicating how a voltage is produced at an arbitrary phase with respect to E_1. Advantage is taken of the two quadrature voltages delivered at the terminals of a parallel-T network.

This effect can be minimized by use of a takeoff cathode follower.

In Fig. 14 is shown a block diagram of a system by which any arbitrary phase with respect to E_1 can be chosen for the output voltage e_o. The frequency characteristics of the takeoff amplifiers should be flat over the complete band of operating frequencies. Obviously, these amplifiers should produce equal voltage gains at all frequencies. In order to produce two voltages with equal amplitudes, but one 180° out of phase with the other, paraphase amplifiers are used together with cathode followers. This type of circuit will be shown later included in a laboratory model of the quadrasine oscillator.

AMPLITUDE COMPRESSION BY THERMISTOR

A quadrasine circuit has been designed which may operate as a broadband frequency-selective amplifier or as a variable-frequency quadrasine oscillator. The operational mode of the circuit shown in Fig. 15 can be chosen by the position of switch S. This circuit was primarily designed for operations at frequencies which may be arbitrarily chosen between 20 cycles per second and 100,000 cycles per second. The unit contains an amplifier-mixer that produces a single output voltage which is linearly proportional to the algebraic sum of two input voltages. The output from the amplifier is fed into a symmetric parallel-T network by using a cathode follower. This circuit contains a thermistor-controlled amplitude compression mechanism. Also, the parallel-T network can be adjusted for operations at different frequencies by use of ganged elements.

In order to understand the operating characteristics of this circuit, gain measurements should be obtained. While operating this unit as a frequency-selective amplifier the amplitude compression mechanism has the effect of broadening the frequency response curve. By use of empirically acquired data and circuit theory it can be shown that this result is natural.

Operation of the amplitude compression mechanism may be analyzed by measuring the output voltage E_3 as a function of the input voltage e_i to grid 1. The voltage gain A_1 is the ratio of the output voltage E_3 to the input voltage e_i. This voltage gain is measured with switch S on contact a while the input-voltage frequency is the same as the null frequency of the network. In Fig. 16 is shown a smooth curve which represents the voltage gain A_1 as a function of the input voltage e_i. For values of the input voltage e_i from 1 to 4 volts, the voltage gain diminishes logarithmically. For this part of the graph an empirical gain formula can be written, which is

$$A_1 = 3.10 - \log_{10}(e_i). \tag{45}$$

This gain formula shows the amplitude-compression effect of the thermistor element. As the

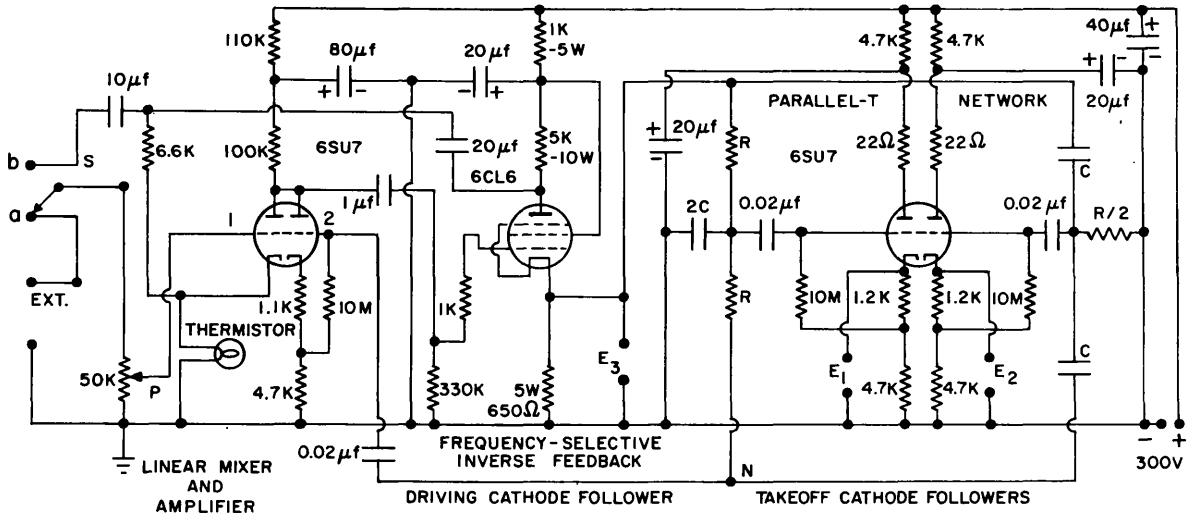

Fig. 15 — A tuned amplifier which can be used for developing quadrature voltages through a wide range of frequencies because of a cathode follower for driving the parallel-T network. Also, loading effects on the network are minimized by using takeoff cathode followers that are designed to have high input impedances.

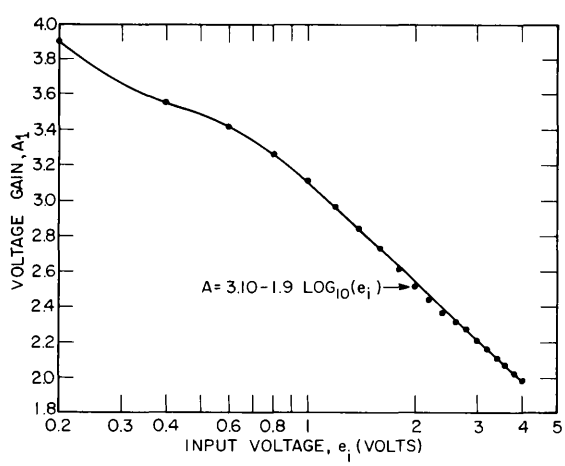

Fig. 16 — Variable voltage gain of the amplifier in Fig. 15 as it changes with respect to input voltage e_i

input voltage is increased, the resistance of the element is increased because of feedback voltage from the plate of the 6CL6. Since this feedback voltage is directly across the thermistor, the resistance of the metallic filament increases because of heating. As this resistance increases, more inverse-feedback coupling exists, thereby reducing the voltage gain A_1. This reduction of gain is clearly indicated by the last term in the above formula. The voltage gain A_2 is not measurably affected by changes of the input voltage to grid 2.

With switch S on contact a, the circuit operates as a frequency-selective amplifier. The frequency response characteristics are somewhat affected by the above empirical gain formula. This effect can be investigated by reference to Eqs. (29) and (45). If the amplitude compression mechanism had no effect on the frequency response of the amplifier with voltage gain A, the complex form of A could be written as

$$A(u) = \frac{E_3}{e_i} = \frac{-A_1\,[(1+u^2)+4u]}{(A_2+1)(1+u^2)+4u}. \qquad (29')$$

The magnitude of $A(\gamma)$ can be computed by inserting the frequency parameter γ in the expression

$$A = \frac{A_1\sqrt{(1-\gamma^2)^2+16\gamma^2}}{\sqrt{(A_2+1)^2\,(1-\gamma^2)^2+16\gamma^2}}. \qquad (46)$$

Once A_2 is known, the normalized values of A can be computed by allowing A_1 to equal 1. The normalized gain A_n can be computed for each frequency parameter by use of the expression

$$A_n = \frac{\sqrt{(1-\gamma^2)^2+16\gamma^2}}{\sqrt{(1+A_2)^2\,(1-\gamma^2)^2+16\gamma^2}}. \qquad (47)$$

TABLE 5
Comparison of Experimental and Computed Frequency Response of a Frequency-Selective Amplifier With Amplitude Compression

γ	A_n	Experimental G_n	Computed G_n	$\frac{G_n \text{ (Exp.)}}{G_n \text{ (Comp.)}}$	$\frac{G_n \text{ (Exp.)}}{A_n}$
0.12	0.705	0.809	0.785	1.031	1.148
0.16	0.731	0.820	0.805	1.019	1.122
0.20	0.759	0.836	0.826	1.012	1.101
0.30	0.829	0.873	0.879	0.993	1.053
0.40	0.887	0.900	0.922	0.976	1.015
0.50	0.931	0.927	0.952	0.974	0.996
0.60	0.961	0.955	0.973	0.982	0.994
0.80	0.992	0.991	0.994	0.997	0.999
0.90	0.998	0.998	0.997	1.001	1.000
1.00	1.000	1.000	1.000	1.000	1.000
1.2	0.995	0.996	0.996	1.000	1.001
1.6	0.967	0.960	0.977	0.983	0.993
2.0	0.931	0.927	0.952	0.974	0.996
2.4	0.896	0.900	0.928	0.970	1.004
2.8	0.864	0.884	0.904	0.978	1.023
3.0	0.850	0.875	0.894	0.979	1.029
3.2	0.837	0.873	0.886	0.985	1.043
3.6	0.814	0.858	0.868	0.988	1.054
4.0	0.794	0.855	0.853	1.002	1.077
5.0	0.759	0.836	0.826	1.012	1.101
6.0	0.735	0.818	0.808	1.012	1.113
7.0	0.719	0.815	0.795	1.025	1.134
8.0	0.708	0.809	0.787	1.028	1.143

In the second column of Table 5 are shown the computed values for A_n corresponding with frequency parameters ranging between 0.12 and 8.0. Overall gain $G(\gamma)$ of the amplifier is defined as the ratio of the measured voltage E_3 to the input voltage e_i.

The normalized values of $G_n(\gamma)$ can be found as

$$G_n(\gamma) = G(\gamma)/G(1). \tag{48}$$

In the third column of Table 5 are shown the experimentally obtained values of $G_n(\gamma)$ acquired by maintaining the amplitude of input voltage e_i constant and changing the driving frequency. In the last column are shown ratios of the $G_n(\gamma)$ values to the computed A_n values. These ratios are within 1% of unity for frequency parameters between 0.5 and 2.4. For parameter values larger than 2.4 and smaller than 0.5 these ratios increase, becoming nearly 15% larger than unity at parameter values of 8.0 and 0.12. These deviations suggest that the effect of the termistor on amplifier gain has not entered into the computations of A_n.

Since the thermistor responds to changes of voltage from the plate of the 6CL6, it does not matter whether this change is caused by a change of input voltage e_i to grid 1 or by action of the frequency-selective inverse-feedback voltage fed to grid 2. The input voltage to the parallel-T network is controlled by the voltage gain A_1 and the inverse-feedback voltage gain A_2. As shown previously, voltage gain A_1 depends on the amount of voltage on the plate of the 6CL6. Any change of this voltage can be considered the same as that caused by an equivalent change of input voltage e_i to grid 1.

When experimentally obtaining data consisting of the measured values of the output voltage E_3

as the frequency of the input voltage is changed, the amplitude of the input voltage is maintained constant at 2 volts. Even though the input e_i is maintained constant, the thermistor is heated as if this voltage varies as a function of frequency. For computing the voltage gain G, this effect is accounted for by assuming that the input voltage varies as if multiplied by the normalized gain A_n, which was derived considering action of the inverse feedback voltage to grid 2. In view of this assumption, Eq. (45) should be written to express voltage gain A_1 as a function of the frequency parameter. This revised expression is

$$A_1 = 3.10 - \log_{10} A_n e_i. \qquad (45')$$

With reference to Eq. (46), it can be shown that voltage gains A_1 and G are identical because both represent the same voltage ratio E_3/e_i. Thus, voltage gain G can be written analytically as

$$G = A_1 A_n = A_n\ (3.10 - \log_{10} A_n e_i). \qquad (49)$$

The normalized voltage gain G_n is found by dividing through by the maximum value of G, which is obtained when A_n is 1. For an experimental model of this amplifier $G_{max} = (3.10 - \log_{10} 2) = 2.53$. Finally, the overall normalized gain was

$$G_n = \frac{A_n\ (3.10 - \log_{10} A_n e_i)}{2.53}. \qquad (50)$$

In the fourth column of Table 5 are shown computed G_n values, which were obtained using Eq. (50). Inspection of the fifth column reveals that the computed values of G_n are within 3% of the experimental values. Evidently the thermistor has the effect of increasing the spectral response of the amplifier. In Fig. 17 are shown two curves which represent variations of G_n with respect to values of the frequency parameter. The experimental and computed values of G_n very nearly agree, which is expected inasmuch as the computations were made using an empirical equation derived from measurements.

The use of this type of frequency response characteristic could be affected by thermal lag in the resistance change of the thermistor. These curves were obtained by allowing the thermistor to reach thermal equilibrium. As Keithly (15) has reported, the thermistor thermal lag should be such that no appreciable change of resistance occurs within an operating cycle. For this particular circuit the thermistor is a 3-watt light bulb rated for 125-volt operation. The null frequency of the parallel-T network was 500 cycles per second. No appreciable distortion of the waveform could be traced to action of the thermistor.

If switch S (Fig. 15) is placed on contact b, the circuit will perform as an oscillator, provided the loop gain G is greater than unity at some frequency and the input voltage to grid 1 is properly phased. Inasmuch as the voltage fed back to the thermistor from the plate of the 6CL6 is properly phased for inverse feedback, this voltage is properly phased for regenerative feedback when impressed on grid 1. When the loop gain is greater than unity at some frequency and the signal fed to grid 1 is phased for regenerative

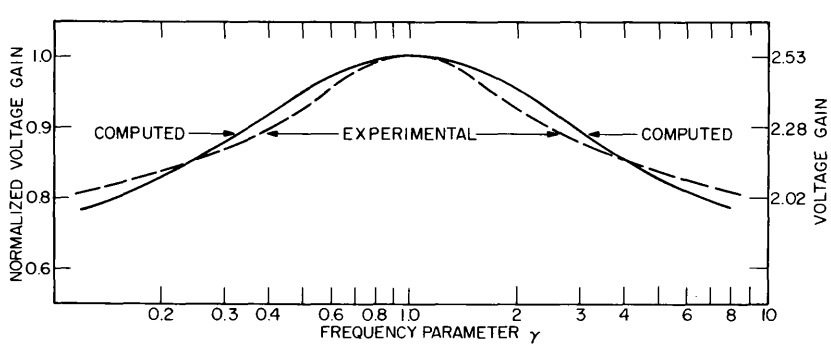

Fig. 17 – Voltage gain *versus* frequency of input to a frequency-selective amplifier with a mechanism for amplitude compression

feedback, the Barkausen conditions for producing oscillations have been satisfied.

The loop gain G can be evaluated using the previously derived expression

$$G = \alpha A_1 - \beta A_n. \tag{42}$$

The regenerative feedback factor α is the product of two other factors; a voltage amplification factor N and a voltage reduction factor y. The voltage amplification factor N can be determined by measuring the amplitude of the voltage E_p on the plate of the 6CL6 and finding the ratio of this voltage to the output voltage E_3 when the input voltage to grid 1 is 2 volts. The voltage reduction factor y is the ratio of 2 volts to the plate voltage E_p. With 2 volts impressed on grid 1 it was found that α is a negative quantity equal to -0.4075. With A_1 equal to -2.53 the loop gain G was 1.031 when the frequency parameter was unity. These voltages can be measured with a Ballantine electronic voltmeter. Since the operating frequency is same as the null frequency of the network, β is zero. Hence, the voltage gain A_1 and the factors N and y as determined by measurements are the only quantities needed for computing the loop gain.

As a simple oscillator, the quadrasine circuit shown in Fig. 15 produces a sine wave which appears to be well formed when presented on the screen of an oscilloscope. In Fig. 18 is shown an oscillogram using the linear sweep produced on the horizontal axis of an oscilloscope.

The operating frequency was changed by changing the value of C in the parallel-T network. In Fig. 19 are shown two circles produced at two different frequencies. The outer circle was formed by use of two sine waves during operation at a frequency of 100 cycles per second. After the large circle was photographed, all controls remained untouched except for a single knob by which the ganged capacitors in the network were changed. The inner circle was formed during operation at 1000 cycles per second. Even though the operating frequency was changed tenfold, the amplitude (circle radius) changed only 11%. When the resistors instead of the capacitors in the network were changed, the tenfold frequency change from 100 to 1000 cycles per second resulted in very little change in amplitude. This result is of interest because an effective frequency control system for this oscillator could be the same as that suggested by Edwards (16) for digitizing the operating frequency indications.

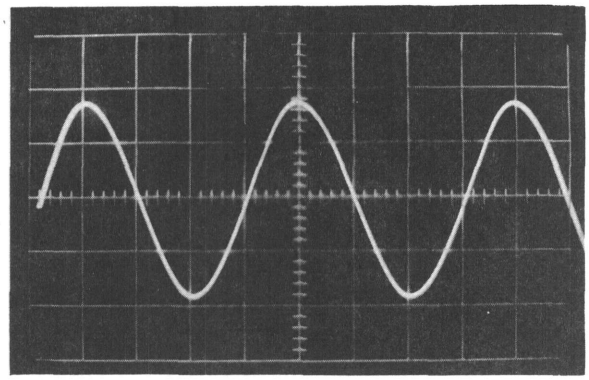

Fig. 18 — A sine wave appearing across terminals to the source of voltage E_1 shown in Fig. 15

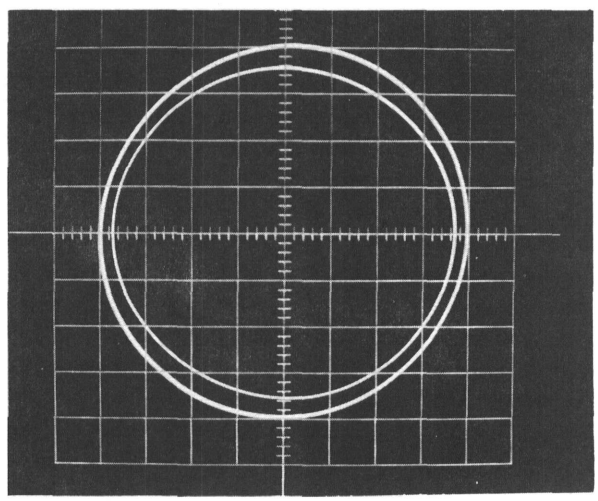

Fig. 19 — Cyclograms produced with voltages E_1 and E_2 delivered by a circuit similar to the one depicted in Fig. 15. The outer circle was produced during operation at 100 cycles per second. Without touching any control except the frequency dial the operating frequency was changed to 1000 cycles per second, which produced the inner cyclogram.

When forming cyclograms on oscilloscope screens it is important that the vertical and horizontal deflection amplifiers respond equally at all operating frequencies. If trim adjustments are used for making the network symmetric at all controlled positions of the ganged condensers, an oscilloscope may be of little value as a guide if the deflection amplifiers respond unequally at

some frequencies. A Tektronix type 536 x-y oscilloscope appears to be satisfactory for operating frequencies between 20 and 100 kilocycles per second.

Laboratory experience has shown that the amplitude regulating action of the thermistor is well damped when the voltage gain A_2 is small (*e.g.*, less than unity). If the voltage gain A_2 is increased to large values (larger than 5), oscillations may build up slowly; and transients introduced when adjusting the frequency dial or range switch may cause oscillations to cease. With a low voltage gain A_2, amplitudes of oscillations are quite stable except near the power-line frequency. A large RC filter inserted between the high-voltage power supply (approximately 300 volts) and the plates of the two triodes in the 6SU7 tube with grids 1 and 2 is helpful for removing undesirable coupling to the power line. With a well-regulated and filtered high-voltage power supply the output waveforms are free from amplitude jitter. For this experimental circuit the high-voltage power supply is a model M-265.0-0100A manufactured by Technipower, Norwalk, Connecticut. The accuracy of regulation is listed as ±0.05% and the ripple less than 0.002% or 1 millivolt rms.

LABORATORY MODEL OF A QUADRASINE OSCILLATOR

A quadrasine oscillator has been designed and constructed for general electronic laboratory applications. In Fig. 20 is shown a schematic diagram of the circuit. From the parallel-T network, quadrature voltage E_1 is passed through a takeoff cathode follower. The output of the cathode follower is placed across a 10-kilohm potentiometer which is one of the two units with arms rotated by turning the same shaft. From the potentiometer arm the voltage is impressed on the grid of a paraphase amplifier. Both output from the paraphase amplifier are available for external use by making connections through a GR type 274-QBJ shielded adaptor or by simply making connections to the binding-post terminals. Quadrature voltage E_2 is connected to external loading in a similar manner and is labeled "Quad."

A variable phase selection mechanism has been included. The phase is selected by manipulation (on the front panel) of switches and of the dial for the arm of a ten-turn Helipot with a total resistance of 50,000 ohms. From the arm of the potentiometer the voltage is impressed on the grid of a paraphase amplifier which furnishes two voltages to General Radio terminals arranged for external connections similar to the quadrature voltages and labeled "variable phase."

If the parallel-T network is properly trimmed so that all settings of the ganged condensers the network is symmetric, the network will be fed by a voltage that is phased 45° with respect to voltage E_1. This voltage is placed across a 10,000-ohm potentiometer by which one can regulate the amplitude. The output voltage from the arm of the potentiometer is impressed on the grid of a paraphase amplifier which feeds its voltages to external load connections.

In order to cause the oscillator to produce a wide variation of frequencies, the parallel-T network has to be altered in terms of changing the values of the resistors and of the capacitors. Frequencies are changed in ratios of ten to one by ganged siwtching of the resistors. Fine selections of the operating frequencies are made by rotating shafts of two two-ganged capacitors. On the front panel are a dial mechanically connected to the ganged capacitors and a knob for switching the resistors.

The two two-ganged capacitors are mounted rigidly on good electrical insulation material. Because the frame of one two-ganged unit must be insulated from the chassis, a nylon gear is used for mechanically driving its shaft. In order to obtain a ten-to-one frequency variation, the ratio of maximum to minimum capacitance of all capacitors should be the same. In order to keep the network symmetric at all settings of the ganged capacitors, all sections should change exactly the same amount as the shafts are rotated. Compliance with this specification is difficult; hence it seems worthwhile to vary the operating frequency through a maximum to minimum ratio of five to one rather than ten to one. A worthy goal is to produce the quadrature voltages with equal amplitudes at all operating frequencies which requires the maintenance of a symmetric network at all settings of the ganged capacitors. If this goal can be achieved, reliable phase shift indications can be engraved on the variable-phase-shift dial.

In the parallel-T network are shown (Fig. 20) resistors and trim adjustments switched into operation for each frequency range. Each section

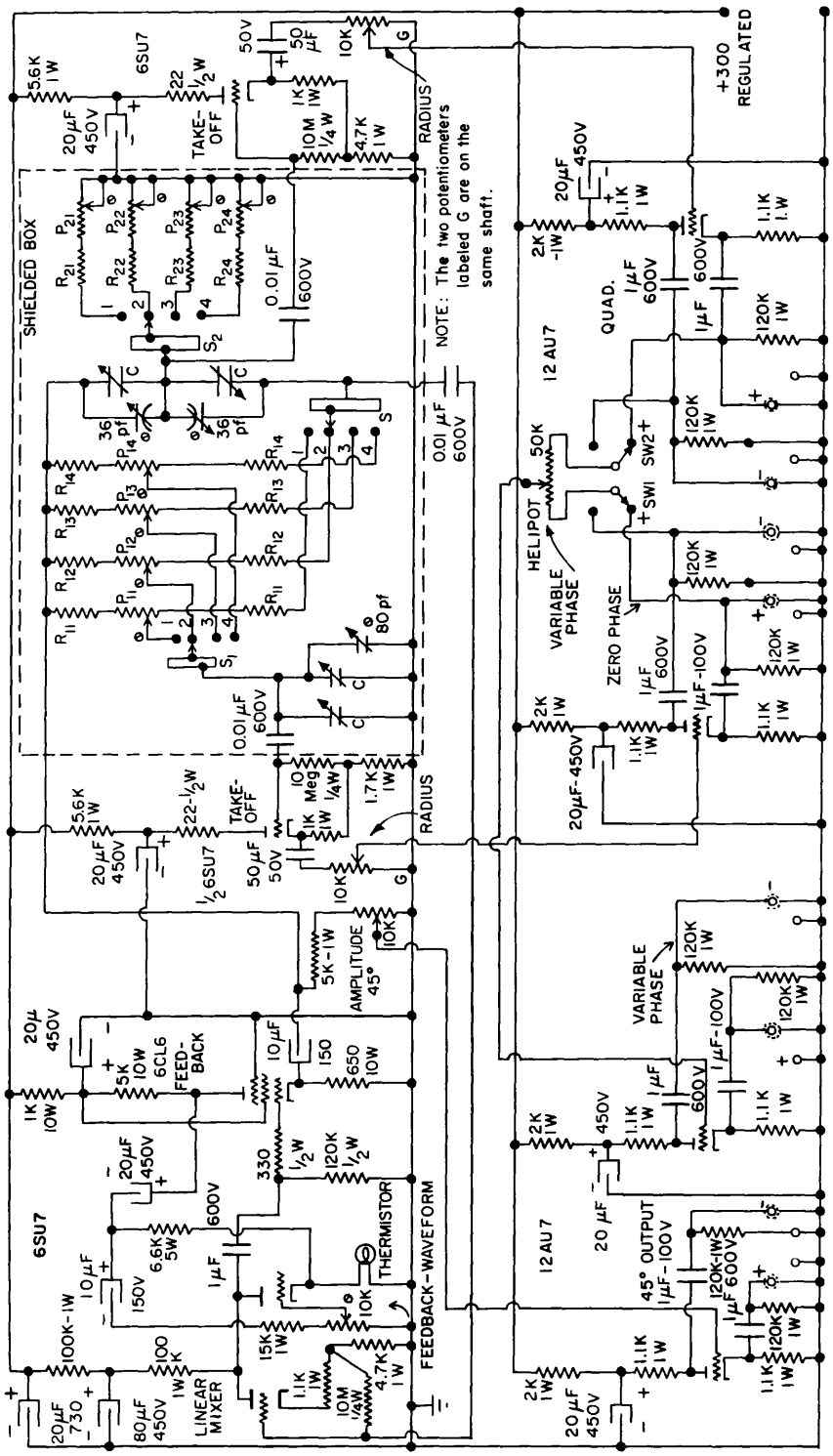

Fig. 20 — Complete schematic of a quadrasine oscillator for laboratory instrumentation

of the ganged capacitors has a minimum capacitance of 16 picofarads and a maximum capacitance of 467 picofarads. It was necessary to place variable trimmers across these sections so that by adjustments the ratio of the maximum to minimum capacitance could be made ten to one. For the different frequency ranges the resistors and trimmers are as given in Table 6.

The maximum output voltage from all channels except the variable-phase channel was about 1 volt rms. The maximum output for the variable-phase channel was 0.5 rms and will vary in accordance with settings of the variable-phase dial to a minimum of approximately 0.35 volt rms. This minimum value will be reached when the arm in the variable phase potentiometer is near the midresistance value.

In Fig. 21 is shown the front panel of an instrument constructed as indicated in Fig. 20. Some care was exercised to reduce couplings between magnetic fields near the ac power transformer and the parallel-T network. The side view of the chassis shown in Fig. 22 shows that the chassis is deep in order to separate the power supply from the network. Much space can be preserved by good electromagnetic shielding of the network assembly and a well-designed power supply with small external magnetic field strength.

TABLE 6
Resistances of Resistors and Trimmers Rheostats in the Parallel-T Network

Range n	Resistors R_{n1}	Trimming Potentiometers P_{n1}	Resistors R_{n2}	Trimming Potentiometers P_{n2}
1	$R_{11} = 15$ megohms	$P_{11} = 2$ megohms	$R_{12} = 7.5$ megohms	$P_{12} = 1$ megohm
2	$R_{21} = 1.5$ megohms	$P_{21} = 200$ kilohms	$R_{22} = 750$ kilohms	$P_{22} = 100$ kilohms
3	$R_{31} = 150$ kilohms	$P_{31} = 25$ kilohms	$R_{32} = 75$ kilohms	$P_{32} = 25$ kilohms
4	$R_{41} = 15$ kilohms	$P_{41} = 5$ kilohms	$R_{42} = 7.5$ kilohms	$P_{42} = 5$ kilohms

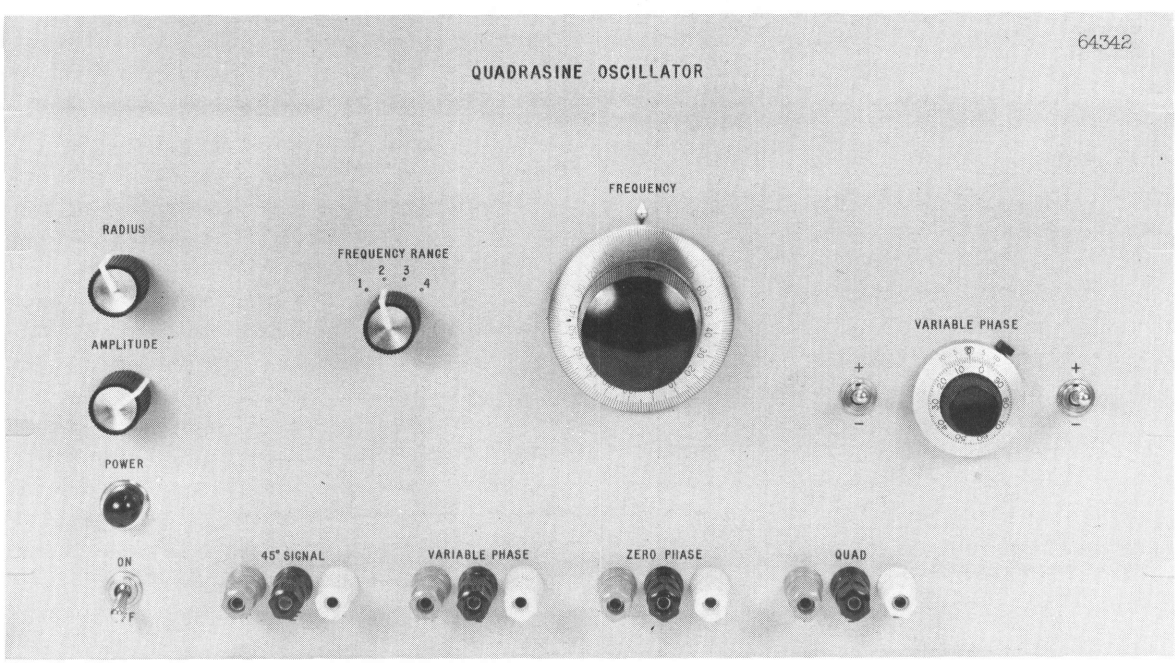

Fig. 21 — Front panel of a quadrasine oscillator which can be used for variable frequency operation

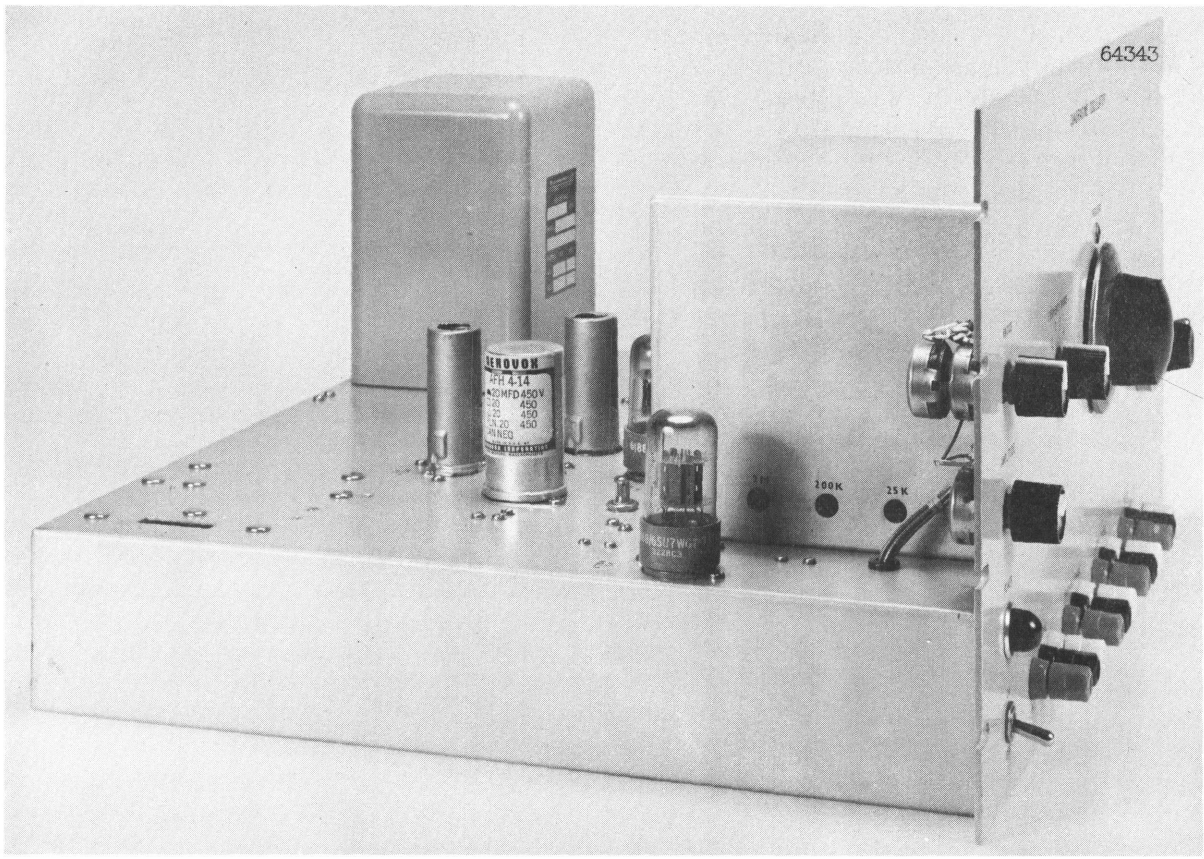

Fig. 22 — Side view of the quadrasine oscillator shown in Fig. 21. The parallel-T network together with the ganged switches are contained in a metal enclosure for reducing stray couplings to external circuits.

CONCLUDING REMARKS

Connections can be made to a symmetric parallel-T network for developing two voltages phased in quadrature. It is possible that in some circuits the parallel-T network may perform the normal function of providing null transmission at some frequency and simultaneously provide two voltages phased in quadrature. Such circuits of interest are frequency-selective amplifiers, variable-frequency dual-phase oscillators, and frequency discriminators.

Normally the parallel-T network is considered as one having three terminals when used only for its null transmission characteristics. If, in addition, the network is used for providing quadrature voltages, it may be considered as one having five terminals. Ideally the quadrature voltages should be delivered to external loading elements by use of high-input-impedance-to-low-output-impedance conversion devices.

Even through a symmetric parallel-T network may be driven by a voltage source at some frequency other than the null frequency, on the extra two terminals or junctions the voltages remain phased in quadrature. While this phase relationship is not critically sensitive to frequency variations, relative amplitudes of the two voltages are changed by variations of frequency. A valid complex algebraic relation between these two voltages can be written as $E_2 = j\gamma E_1$, where γ is the ratio of the driving frequency to the null frequency. This expression indicates the fixed quadrature phase relation together with the relative amplitudes of these two voltages as the source frequency varies by some factor with respect to the null transmission frequency.

REFERENCES

1. Schaschl, E., and Marsh, G.A., "Concentration Cells and Aqueous Corrosion," *Corrosion* **16:**461t (Sept. 1960)
2. Gamertsfelder, G.R., and Holdam, J.V., "Sinusoidal Waveform Generators," MIT Radiation Laboratory Series, vol. 19, New York:McGraw-Hill, pp. 120-122, 1949
3. Fleisher, H., "Low-Frequency Feedback Amplifiers," MIT Radiation Laboratory Series, vol. 18, New York:McGraw-Hill, pp. 384-397, 1948
4. Attura, G.M., "Effects of Carrier Shifts on Derivative Networks for A-C Servomechanisms," *Trans. Am. Inst. Elec. Engrs.* **70:**612 (May 1951)
5. Augustadt, H.W., Electric Filter, U.S. Patent 2,106,785, Feb. 1, 1938, application dated May 23, 1936
6. Stanton, L., "Theory and Applications of Parallel-T Resistance-Capacitance Frequency-Selective Networks," *Proc. I.R.E.* **34:**447-456 (July 1946)
7. White, C.F., "Transfer Characteristics of a Bridged Parallel-T Network," NRL Report R-3167, Aug. 27, 1947
8. Burington, R.S., and Torrance, C.C., "Higher Mathematics," New York:McGraw-Hill, pp. 661-662, 1930.
9. Scott, H.H., "A New Type of Selective Circuit and Some Applications," *Proc. I.R.E.* **26:**226-235 (Feb. 1938)
10. Gillette, F.N., and Washburn, C.A., "Circuit Techniques," MIT Radiation Laboratory Series, vol. 22, New York: McGraw-Hill, ch. 4, pp. 114-116, 1948
11. Hastings, A.E., "Analysis of a Resistance-Capacitance Parallel-T Network and Applications," *Proc. I.R.E.* **34:** 126P-129P (1946)
12. Seely, S., "Electron-Tube Circuits," 2nd ed., New York: McGraw-Hill, pp. 356-362, 1958
13. Seely, S., "Electron-Tube Circuits," 2nd ed., New York: McGraw-Hill, pp. 398-401, 1958
14. Terman, F.E., Buss, R.R., Hewlett, W.R., and Cahill, F.C., "Some Applications of Negative Feedback with Particular Reference to Laboratory Equipment," *Proc. I.R.E.* **27:**649 (Oct. 1939)
15. Keithley, J.F., "Low-Frequency Oscillator," *Electronics* **21 (No. 9):**108-109 (Sept. 1948)
16. Edwards, C.M., "A Precision Decade Oscillator for 20 Cycles to 200 Kilocycles," *Proc. I.R.E.* **39:**277-278 (Mar. 1951)

Security Classification

DOCUMENT CONTROL DATA - R&D

(Security classification of title, body of abstract and indexing annotation must be entered when the overall report is classified)

1. ORIGINATING ACTIVITY *(Corporate author)* Naval Research Laboratory Washington, D.C. 20390	2a. REPORT SECURITY CLASSIFICATION Unclassified 2b. GROUP

3. REPORT TITLE

USING A PARALLEL-T NETWORK FOR DEVELOPING QUADRATURE VOLTAGES AT VARIABLE FREQUENCIES

4. DESCRIPTIVE NOTES *(Type of report and inclusive dates)*

Interim report on the problem

5. AUTHOR(S) *(Last name, first name, initial)*

Bailey, S. O.

6. REPORT DATE August 30, 1966	7a. TOTAL NO. OF PAGES 28	7b. NO. OF REFS 16

8a. CONTRACT OR GRANT NO. NRL Problem R05-24A b. PROJECT NO. SF 013-01-14-11630.201 c. d.	9a. ORIGINATOR'S REPORT NUMBER(S) NRL Report 6440 9b. OTHER REPORT NO(S) *(Any other numbers that may be assigned this report)*

10. AVAILABILITY/LIMITATION NOTICES

Distribution of this document is unlimited.

11. SUPPLEMENTARY NOTES	12. SPONSORING MILITARY ACTIVITY Department of the Navy (Naval Ship Systems Command), Washington, D.C. 20360

13. ABSTRACT

Two voltages phased in quadrature are developed at special junctions in a twin-T or parallel-T resistance-capacitance network. Heretofore, this network has been utilized for only its null transmission characteristics. Utilization of these properties remain essential when considering some complete circuits. The two voltages are produced with phase relation that is not sensitive to changes of the driving frequency; however, the amplitude ratio of the two voltages is related to the null frequency.

A variable frequency oscillator which generates two voltages phased in quadrature can be constructed using a symmetric parallel-T network. The operating frequency may be manually selected in somewhat the same manner as presently done with conventional Wien-bridge oscillators. This oscillator may be converted into a generator of voltages with arbitrary phase relations which may be simply controlled.

By making connections to all junctions of the parallel-T network it is possible to construct frequency-selective amplifiers which operate through narrow bandwidths and produce well-filtered quadrature voltages. These voltages should be useful for producing undistorted circular time traces on oscilloscopes.

With connections to all junctions in a parallel-T network it is possible to construct frequency discriminators with output voltages that vary in a predictable manner as the input frequency varies through a maximum-to-minimum ratio of four to one. The bandwidth together with the upper and lower limit of the output voltage can be altered by incorporating a frequency-selective amplifier as a part of the frequency discriminator.

DD FORM 1 JAN 64 1473

Security Classification

14. KEY WORDS	LINK A ROLE	LINK A WT	LINK B ROLE	LINK B WT	LINK C ROLE	LINK C WT
Phase control devices						
Phase shift						
Frequency						
Discriminators						
Networks						
Amplifiers						
Oscillators						
Quadrature voltages						
Parallel-T network						
Constant phase shift						
Frequency-selective amplifiers						

INSTRUCTIONS

1. ORIGINATING ACTIVITY: Enter the name and address of the contractor, subcontractor, grantee, Department of Defense activity or other organization *(corporate author)* issuing the report.

2*a*. REPORT SECURITY CLASSIFICATION: Enter the overall security classification of the report. Indicate whether "Restricted Data" is included. Marking is to be in accordance with appropriate security regulations.

2*b*. GROUP: Automatic downgrading is specified in DoD Directive 5200.10 and Armed Forces Industrial Manual. Enter the group number. Also, when applicable, show that optional markings have been used for Group 3 and Group 4 as authorized.

3. REPORT TITLE: Enter the complete report title in all capital letters. Titles in all cases should be unclassified. If a meaningful title cannot be selected without classification, show title classification in all capitals in parenthesis immediately following the title.

4. DESCRIPTIVE NOTES: If appropriate, enter the type of report, e.g., interim, progress, summary, annual, or final. Give the inclusive dates when a specific reporting period is covered.

5. AUTHOR(S): Enter the name(s) of author(s) as shown on or in the report. Enter last name, first name, middle initial. If military, show rank and branch of service. The name of the principal author is an absolute minimum requirement.

6. REPORT DATE: Enter the date of the report as day, month, year; or month, year. If more than one date appears on the report, use date of publication.

7*a*. TOTAL NUMBER OF PAGES: The total page count should follow normal pagination procedures, i.e., enter the number of pages containing information.

7*b*. NUMBER OF REFERENCES: Enter the total number of references cited in the report.

8*a*. CONTRACT OR GRANT NUMBER: If appropriate, enter the applicable number of the contract or grant under which the report was written.

8*b*, 8*c*, & 8*d*. PROJECT NUMBER: Enter the appropriate military department identification, such as project number, subproject number, system numbers, task number, etc.

9*a*. ORIGINATOR'S REPORT NUMBER(S): Enter the official report number by which the document will be identified and controlled by the originating activity. This number must be unique to this report.

9*b*. OTHER REPORT NUMBER(S): If the report has been assigned any other report numbers *(either by the originator or by the sponsor)*, also enter this number(s).

10. AVAILABILITY/LIMITATION NOTICES: Enter any limitations on further dissemination of the report, other than those imposed by security classification, using standard statements such as:

(1) "Qualified requesters may obtain copies of this report from DDC."

(2) "Foreign announcement and dissemination of this report by DDC is not authorized."

(3) "U. S. Government agencies may obtain copies of this report directly from DDC. Other qualified DDC users shall request through _____."

(4) "U. S. military agencies may obtain copies of this report directly from DDC. Other qualified users shall request through _____."

(5) "All distribution of this report is controlled. Qualified DDC users shall request through _____."

If the report has been furnished to the Office of Technical Services, Department of Commerce, for sale to the public, indicate this fact and enter the price, if known.

11. SUPPLEMENTARY NOTES: Use for additional explanatory notes.

12. SPONSORING MILITARY ACTIVITY: Enter the name of the departmental project office or laboratory sponsoring *(paying for)* the research and development. Include address.

13. ABSTRACT: Enter an abstract giving a brief and factual summary of the document indicative of the report, even though it may also appear elsewhere in the body of the technical report. If additional space is required, a continuation sheet shall be attached.

It is highly desirable that the abstract of classified reports be unclassified. Each paragraph of the abstract shall end with an indication of the military security classification of the information in the paragraph, represented as *(TS)*, *(S)*, *(C)*, or *(U)*.

There is no limitation on the length of the abstract. However, the suggested length is from 150 to 225 words.

14. KEY WORDS: Key words are technically meaningful terms or short phrases that characterize a report and may be used as index entries for cataloging the report. Key words must be selected so that no security classification is required. Identifiers, such as equipment model designation, trade name, military project code name, geographic location, may be used as key words but will be followed by an indication of technical context. The assignment of links, roles, and weights is optional.