NRL Report 6285

Calculation of the Monostatically Reflected Velocity Potential in the Far Field of Certain Finite Rigid Bodies

A. J. RUDGERS

Propagation Branch
Sound Division

December 3, 1965

APPROVED FOR PUBLIC
RELEASE - DISTRIBUTION
UNLIMITED

U.S. NAVAL RESEARCH LABORATORY
Washington, D.C.

CONTENTS

Abstract 1
Problem Status 1
Authorization 1

INTRODUCTION 1

REFLECTION FROM A RIGID SPHERE 5

REFLECTION FROM A RIGID ELLIPSOID 8

REFLECTION FROM A RIGID GENERAL QUADRIC SURFACE 11

REFLECTION FROM RIGID QUADRIC SEGMENTS AND FRUSTUMS 19

REFLECTION FROM A SHORT, RIGID, RIGHT-CIRCULAR CYLINDER AT BEAM ASPECT 23

SUMMARY 26

REFERENCES 26

APPENDIX A—Summation of the Series $\sum_{p=1}^{\mu} p \exp\left(-2ik \frac{p\ell}{\mu}\right)$ 27

APPENDIX B—Integration of the Form $\int_{-\pi/2}^{\pi/2} [\exp(2ik\ell \cos \Omega)] \cos \Omega \, d\Omega$ 28

APPENDIX C—Definitions of Symbols Used in This Report 30

Calculation of the Monostatically Reflected Velocity Potential in the Far Field of Certain Finite Rigid Bodies

A. J. RUDGERS

Propagation Branch
Sound Division

An existing theory of acoustic reflection, applicable in the far field and embodying the Kirchhoff approximation, is used to calculate the velocity potential of the acoustic wave monostatically reflected from certain rigid bodies. Where possible, a reflection summation formula is applied in these calculations that is written in terms of a few simple geometrical parameters of the reflecting body. The limiting forms of the summation-formula results are found. These forms are identical to results which can be derived according to a well-known reflection integral. A comparison of the approximation of the reflection summation formula to the reflection integral is discussed for certain bodies. General formulae are derived which may be applied to any reflecting object whose surface can be generated by a conic section, or to segments and frustums of such objects. A limitation of calculation schemes based on the summation formula is discussed and illustrated by calculating the velocity potential of the wave reflected from a short, rigid, right-circular cylinder according to the reflection integral. Results of the calculations are discussed in terms of the geometrical parameters employed in the reflection summation formula.

INTRODUCTION

The calculations reported here are restricted to the case of acoustic reflection from a smooth rigid body insonified by a spherical harmonic wave. The spherical wave originates at a point source located at a very great distance from the reflecting object. Only objects having no concavities are considered in order to exclude the problem of multiple scattering. At some point on the line passing through the source and the reflector, a pointlike or "probe" receiver is located. This is also at a great distance from the reflector but need not be coincident with the source. The line connecting the source, receiver, and reflector will be called the *monostatic axis* since a collinear arrangement of source, receiver, and reflector is termed "monostatic." Only certain orientations of reflectors with respect to this monostatic axis are considered. The velocity potential at the receiver point, due to the presence of a reflector in the acoustic field of the source, is calculated subject to one further simplification—the introduction of the Kirchhoff approximation in describing the conditions which exist at the surface of the reflector due to the wave incident upon it.

The analysis of monostatic reflection from rigid objects of arbitrary shape, subject to the above conditions of distant source and receiver points and to the restriction of the Kirchhoff approximation, has been fully described by Neubauer (1). Some of Neubauer's analysis will be outlined here, however, since the calculations to be described are based directly on certain equations developed in his treatment of the reflection problem. In Neubauer's treatment, the reflector, source, and receiver are referred to a *normal plane,* which is the plane that is perpendicular to the monostatic axis and tangent to the reflector surface (Fig. 1). The source produces a spherically diverging acoustic wave of velocity potential φ_i, having speed c. At a distance r from the source this wave is described by the expression

$$\varphi_i = \frac{A}{r} \exp[ik(ct-r)],$$

NRL Problem S01-04; Project RF 101-03-45-5252. This is an interim report on the problem; work is continuing. Manuscript submitted March 30, 1965.

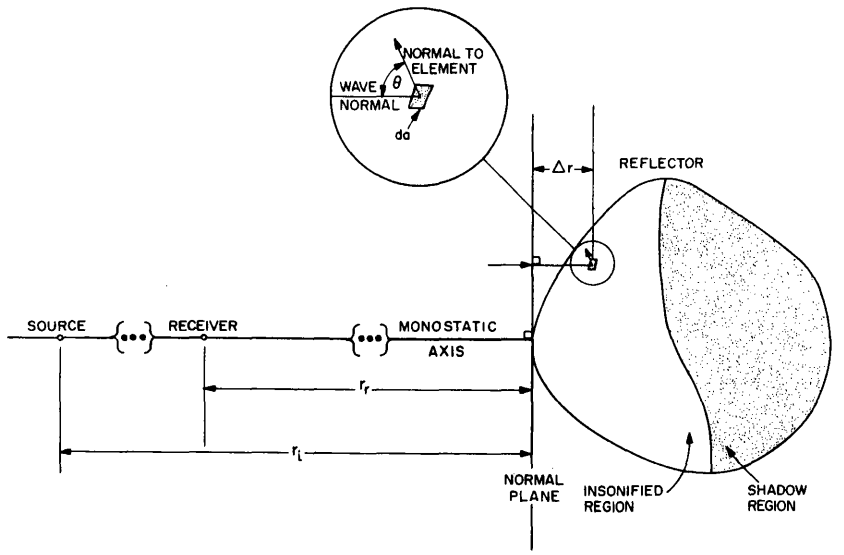

Fig. 1 – The geometry of monostatic reflection from an object of arbitrary shape

where $A \exp(ikct)$ is the strength of the point source at a unit distance from the source at a time t, and k, the wave number, is 2π divided by the wavelength λ. The distance r_i from the source to the normal plane is considered to be great enough so that this spherical wave may be treated as a plane wave in the vicinity of the reflector. In particular, this plane-wave assumption consists of three conditions:

a. There is negligible divergence of the incident spherical wave in the region between the normal plane and the reflector so that there is no variation in the amplitude of the insonification from point to point on the object.

b. The wave normals in the incident wave are essentially perpendicular to the normal plane so that the phase at the normal plane is related to the phase at an elemental area da of the reflector by the distance Δr, which is measured from the normal plane to the elemental area and is perpendicular to the normal plane.

c. The incident particle velocity $\dot{\xi}_i$ at da is related to the incident velocity potential φ_i by

$$\dot{\xi}_i = ik\varphi_i.$$

Subject to the first two of the above conditions, the velocity potential of the wave incident on the area da is given by the expression

$$\varphi_i = \alpha B \exp(-ik\Delta r),$$

where $B \equiv (A/r_i) \exp(ikct)$ and $\alpha \equiv \exp(-ikr_i)$. Using the third assumption and treating each elemental area da as a simple source in an infinite baffle radiating through 2π steradians whose strength is determined by the particle velocity of the incident wave (*i.e.*, making the Kirchhoff approximation), an expression for the velocity potential $d\varphi_r$ of the wave reflected by the element da to the receiver point is obtained:

$$d\varphi_r = -\frac{i\alpha\alpha' kB}{2\pi r_r} [\exp(-2ik\Delta r)] \cos\theta \, da. \tag{1}$$

Here θ is the angle between the outward-pointing normal of the element da and the wave normal of the incident wave, r_r is the distance from the receiver to the normal plane, and $\alpha' \equiv \exp(-ikr_r)$. Equation (1) has the form of a spherical wave originating at the element da. However, several additional approximations are made in its derivation which are valid if the receiver distance r_r is sufficiently great:

a. When two arbitrary elemental areas having different distances from the normal plane are viewed from the receiver point, the amplitudes of the elemental spherical waves arriving from each are essentially equal.

b. When the reflector is viewed from the receiving point, the elemental spherical waves arriving there from any two elemental areas differ in phase only due to the difference in the perpendicular distances of the two areas from the normal plane. That is, the distance $r_r + \Delta r$ determines the phase of the contribution from any elemental area.

Integration of Eq. (1) gives the total velocity potential of the reflected wave at the receiver due to all the infinitesimal elements da:

$$\varphi_r = -\frac{i\alpha\alpha' kB}{2\pi r_r} \int_{Surface} [\exp(-2ik\Delta r)] \cos\theta \, da. \tag{2}$$

The integration is performed only over that portion of the reflector surface directly insonified by the incident wave. The portion of the reflecting object in the geometrical shadow is assumed to make no contribution to the reflected velocity potential. Since, geometrically, the quantity $\cos\theta \, da$ is the projection of da upon the normal plane, the reflection integral given in Eq. (2) may be written

$$\varphi_r = -\frac{i\alpha\alpha' kB}{2\pi r_r} \int_{\substack{Surface \\ Projection}} \exp(-2ik\Delta r) \, da', \qquad \left\{\begin{matrix}\text{Reflection} \\ \text{Integral}\end{matrix}\right\} \tag{3}$$

where da' is this normal projection of da.

As a model of the reflection process, Neubauer then develops a finite sum which approximates the integral in Eq. (3). This is done in the following way. A rectangular coordinate system is chosen (Fig. 2) having its X axis, which points from the source to the reflector, along the monostatic axis and its Y and Z axes in the normal plane. The length ℓ of the X axis which is occupied by the insonified region of the reflecting object is subdivided into μ zones by passing *sectioning planes* at equal intervals of μ/ℓ through the object, all parallel to the normal plane. These planes and the corresponding subdivisions of the object are numbered 1 through μ, with the normal plane being designated with a zero. The letter p refers to an arbitrary member of this family of subdivisions. For each p, the contour defined by the intersection of the pth sectioning plane with the insonified portion of the object is projected onto the normal plane, resulting in a family of μ contours on the normal plane. The area between the $(p\text{-}1)th$ and the pth contours on the normal plane is designated as $\Delta a'_p$. Then $\Delta a'_p$ represents the projection of that portion of the reflecting object's surface that lies between the $(p\text{-}1)th$ and the pth sectioning planes. Since the distance from the normal plane to the μth sectioning plane is ℓ, and this length ℓ is divided into equal intervals by the family of sectioning planes, the distance along the X axis from the normal plane to the pth sectioning plane is $p\ell/\mu$. Replacing da' with $\Delta a'_p$ and $-2ik\Delta r$ with $-2ik\, p\ell/\mu$, and summing the contributions of finite-sized elements of the reflector rather than integrating the effects of infinitesimal elements, Eq. (3) becomes a reflection summation formula given by the expression

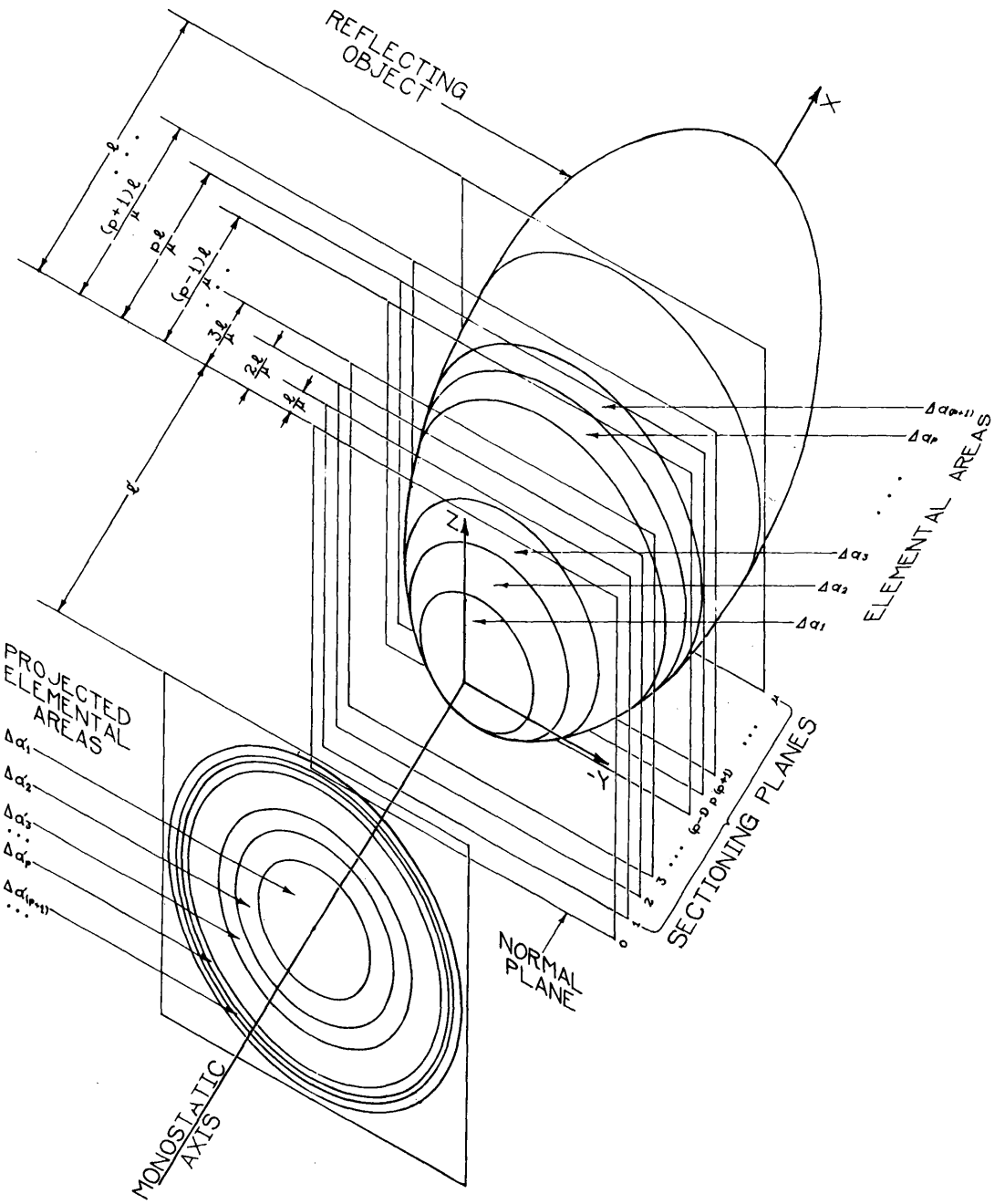

Fig. 2 – The geometrical quantities involved in the derivation of the reflection summation formula (see Eq. (4) in text). For clarity, the contours defined on the reflecting object are not projected onto the normal plane, but onto a plane parallel to the normal plane at a distance ℓ' from it. The family of projected contours on this parallel plane is identical to the family of contours which would be obtained if the projection were made onto the normal plane.

$$\varphi_r(\mu) = -\frac{i\alpha\alpha' kB}{2\pi r_r} \sum_{p=1}^{\mu} \Delta a'_p \exp\left(-2ik\frac{p\ell}{\mu}\right), \qquad \left\{\begin{matrix}\text{Reflection} \\ \text{Summation Formula}\end{matrix}\right\} \tag{4}$$

where the velocity potential of the reflected wave given by this summation formula is written $\varphi_r(\mu)$ rather than φ_r to distinguish it from the velocity potential calculated according to the integral formula [Eq. (3)].

Other methods (2-4), often making similar initial assumptions, have been employed to calculate the reflection from certain of the objects treated in this report. In general, though, such methods differ markedly from those employed here, and while some correspondences can be found between the formulae for reflection characteristics developed by others and those reported here, this report will not attempt to make comparisons with the results of the various other treatments. Properly made comparisons would be quite complicated because the important parameters involved in the other treatments are usually very different from the parameters involved in the reflection summation formula, upon which the present work is based. In general, it is felt that the present treatment considerably simplifies the derivation of reflection formulae, since in the case of the quadric-surface reflectors, their segments, and their frustums, all formulae for particular bodies follow in a simple direct way as special cases of the general formulae derived herein. Also, in the case of the finite-cylinder reflector, the approximations made are not as restrictive as those required by descriptions published elsewhere.

REFLECTION FROM A RIGID SPHERE

The sphere of radius ℓ is represented in Fig. 3. This figure shows the sphere as if it were viewed in the XZ plane of Fig. 2. The sectioning planes define circular contours on the hemispherical insonified portion of the sphere which are projected as circles onto the normal plane. The quantity $\Delta a'_p$ is the area of the annulus defined by the pth and the $(p\text{-}1)th$ such circles and is equal to the difference between the areas of these two circles. The area of the pth circle

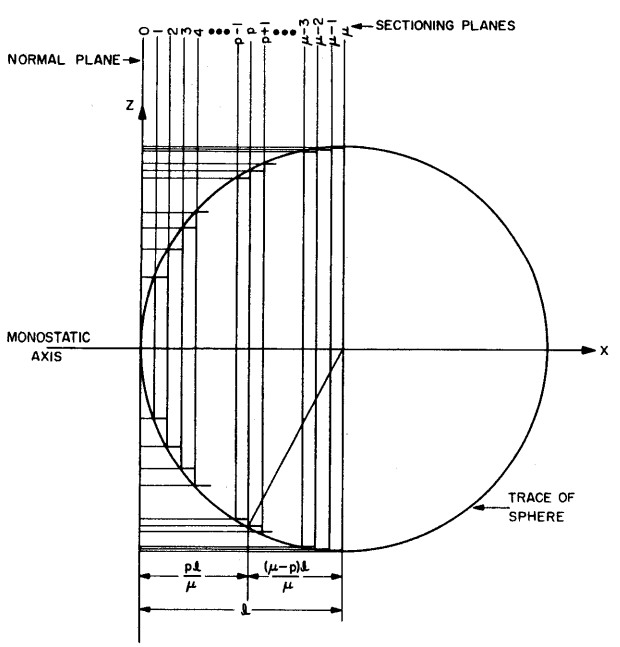

Fig. 3 — The geometry of monostatic reflection from a sphere

on the normal plane is identical to A_p, which is the sphere's cross-sectional area as defined by the *pth* sectioning plane. The area A_p is readily determined with the aid of the figure and is found to be

$$A_p = \pi \ell^2 \left[1 - \left(\frac{\mu - p}{\mu}\right)^2\right].$$

Similarly

$$A_{p-1} = \pi \ell^2 \left[1 - \left(\frac{\mu - (p-1)}{\mu}\right)^2\right],$$

so that

$$\Delta a_p' = A_p - A_{p-1} = \frac{\pi \ell^2}{\mu^2} (2\mu - 2p + 1). \tag{5}$$

Using this value of $\Delta a_p'$ in Eq. (4), the velocity potential of the reflected wave is given as

$$\varphi_r(\mu) = -\frac{i\alpha\alpha' kB}{2r_r} \left(\frac{\ell}{\mu}\right)^2 \sum_{p=1}^{\mu} (2\mu - 2p + 1) \exp\left(-2ik \frac{p\ell}{\mu}\right),$$

which may be written

$$\varphi_r(\mu) = -\frac{i\alpha\alpha' Bk}{2r_r} \left(\frac{\ell}{\mu}\right)^2 \left[(2\mu + 1) \sum_{p=1}^{\mu} \exp\left(-2ik \frac{p\ell}{\mu}\right) - 2 \sum_{p=1}^{\mu} p \exp\left(-2ik \frac{p\ell}{\mu}\right)\right]. \tag{6}$$

The first summation expression in the brackets of Eq. (6) is the sum of a finite geometrical series and is readily found. The second summation expression in the brackets, which involves products of the type $p \exp[-2ik\ (p\ell/\mu)]$, may be expressed in terms of a series of other (geometrical) series and reduced to a simple expression as shown in Appendix A. For the sphere of radius ℓ, the velocity potential $\varphi_r(\mu)$ that is calculated using a summation approximation with μ subdivisions on the reflector is then given as

$$\varphi_r(\mu) = \left(\frac{i\alpha\alpha' B}{r_r}\right)\left(\frac{k\ell}{\mu^2}\right)\left(\frac{\ell}{2}\right)\left[\frac{\exp\left(-2ik \frac{\ell}{\mu}\right)}{\left[\exp\left(-2ik \frac{\ell}{\mu}\right) - 1\right]^2}\right]\left\{2\mu \left[\exp\left(-2ik \frac{\ell}{\mu}\right) - 1\right]\right.$$
$$\left. - [\exp(-2ik\ell) - 1]\left[\exp\left(-2ik \frac{\ell}{\mu}\right) + 1\right]\right\}. \tag{7}$$

As the number of subdivisions μ is increased, the velocity potential given by Eq. (7) approximates more closely the velocity potential given by the integral expression of Eq. (3). In fact, by taking the limit of $\varphi_r(\mu)$ as μ increases without bound, the reflection integral of Eq. (3) can be determined in the same manner as a finite sum is used in analysis to define the Riemann integral of a real function. When the limiting process is carried out on Eq. (7), the expression

$$\varphi_r = \lim_{\mu \to \infty} \varphi_r(\mu) = \frac{i\alpha\alpha' B}{4kr_r} [\exp(-2ik\ell) + 2ik\ell - 1] \tag{8}$$

is obtained. This expression is the same as that obtained by directly performing the integration in Eq. (3). The modulus of this complex expression gives the amplitude of the reflected velocity potential as

$$|\varphi_r| = \frac{|B|}{r_r}\left(\frac{\ell}{2}\right)\left(\frac{\sin^2(k\ell)}{(k\ell)^2} - \frac{\sin(2k\ell)}{k\ell} + 1\right)^{1/2}. \tag{9}$$

This is a well-known expression for the monostatic reflection from a rigid sphere, and forms similar to it are encountered frequently in the literature.

By calculating the difference between the modulus of $\varphi_r(\mu)$, given by Eq. (7), and $|\varphi_r|$, given by Eq. (9), the degree to which the summation process approximates the direct integration can be found. Comparison is most easily made at values of the *size parameter* $k\ell$ equal to integral multiples of π because, for $k\ell = n\pi$, Eq. (7) yields

$$|\varphi_r(\mu)| = \frac{|B|}{r_r}\left(\frac{\ell}{2}\right)\left(\frac{n\mu}{\mu}\right)\left|\csc\left(\frac{n\pi}{\mu}\right)\right|, \qquad (n=1,2,3,\ldots). \tag{10}$$

Equation (9) then becomes

$$|\varphi_r| = \frac{|B|}{r_r}\left(\frac{\ell}{2}\right). \tag{11}$$

Equations (10) and (11) may be normalized with respect to their common coefficient $|B|/r_r\ (\ell/2)$ to obtain the equations

$$|\varphi_0(\mu)| = \left(\frac{n\pi}{\mu}\right)\left|\csc\left(\frac{n\pi}{\mu}\right)\right| \tag{12}$$

and

$$|\varphi_0| = 1 \tag{13}$$

which have a more useful form when making the necessary comparison. The number of subdivisions required to obtain a given degree of comparison changes as the size of the sphere changes with respect to the wavelength of the insonifying wave. However, for $k\ell = n\pi$, the value of $|\varphi_0(\mu)|$ remains constant when the *subdivision density D*, that is, the number of subdivisions of the object per insonifying wavelength, is constant. Thus, for $k\ell = 2\pi$, twice as many subdivisions must be chosen as for $k\ell = \pi$ if the difference between $|\varphi_0(\mu)|$ and $|\varphi_0|$ is to be the same. This can be proven in the following way. For $k\ell = n\pi$, ℓ is equal to $n\lambda/2$. But μ, the number of subdivisions on the sphere, is equal to the subdivision density times the radius of the sphere expressed in wavelengths, or

$$\mu = D\left(\frac{\ell}{\lambda}\right) = \frac{nD}{2}.$$

So Eq. (12) becomes

$$|\varphi_0(\mu)| = \left(\frac{2\pi}{D}\right)\left|\csc\left(\frac{2\pi}{D}\right)\right|. \tag{14}$$

Since the value of $|\varphi_0(\mu)|$ depends only on the subdivision density D, the accuracy of approximation of the reflection summation formula is constant when the number of sectionings of the reflecting sphere per insonifying wavelength is constant. While only a partial comparison of the

summation and integral formulations of the reflection from a rigid sphere is effected when the size parameter $k\ell$ of the sphere is restricted to a few discrete values, such a limited comparison is nevertheless useful for determining the approximate number of subdivisions required to make the difference between the results obtained from the two methods as small as desired for a sphere of a given size. A comparison of Eqs. (12) and (13) has been published elsewhere (1) for the case where $n = 2$.

REFLECTION FROM A RIGID ELLIPSOID

A calculation of the velocity potential of the wave reflected from a rigid ellipsoid, with one of its principal axes lying on the monostatic axis, can be made in a manner similar to the one which was made for the rigid sphere. Let the lengths of the principal axes of the ellipsoid be $2\ell_1$, $2\ell_2$, and $2\ell_3$, respectively, with ℓ_1 lying along the monostatic axis as shown in Fig. 4. However, instead of placing the origin of a coordinate system at the intersection of the monostatic axis with the normal plane as is shown in Fig. 2, let it be located at the center of the ellipsoid. In this coordinate system the equation for the (quadric) surface of the ellipsoid is

$$\frac{x^2}{\ell_1{}^2} + \frac{y^2}{\ell_2{}^2} + \frac{z^2}{\ell_3{}^2} = 1. \tag{15}$$

A cross section defined by the *pth* sectioning plane has the x coordinate $x_p = \ell_1[1 - (p/\mu)]$. Substituting this value for x in Eq. (15) gives the equation of the *pth* contour on the surface of the ellipsoid as

$$\frac{y_p^2}{\ell_2{}^2\left[\frac{2p}{\mu} - \left(\frac{p}{\mu}\right)^2\right]} + \frac{z_p^2}{\ell_3{}^2\left[\frac{2p}{\mu} - \left(\frac{p}{\mu}\right)^2\right]} = 1.$$

But this expression is the equation for an ellipse whose two principal semiaxes have lengths

$$\ell_2\left[\frac{2p}{\mu} - \left(\frac{p}{\mu}\right)^2\right]^{1/2}$$

and

$$\ell_3\left[\frac{2p}{\mu} - \left(\frac{p}{\mu}\right)^2\right]^{1/2},$$

respectively, so that the area of the *pth* cross section is

$$A_p = \pi\ell_2\ell_3\left[\frac{2p}{\mu} - \left(\frac{p}{\mu}\right)^2\right].$$

Therefore, the *pth* elemental projected area on the normal plane is

$$\Delta a_p' = \frac{\pi\ell_2\ell_3}{\mu^2}(2\mu - 2p + 1), \tag{16}$$

so that the velocity potential of the reflected wave, as given by Eq. (4), is

$$\varphi_r(\mu) = -\frac{i\alpha\alpha' kB}{2r_r}\left(\frac{\ell_2\ell_3}{\mu^2}\right)\sum_{p=1}^{\mu}(2\mu - 2p + 1)\exp\left(-2ik\frac{p\ell_1}{\mu}\right).$$

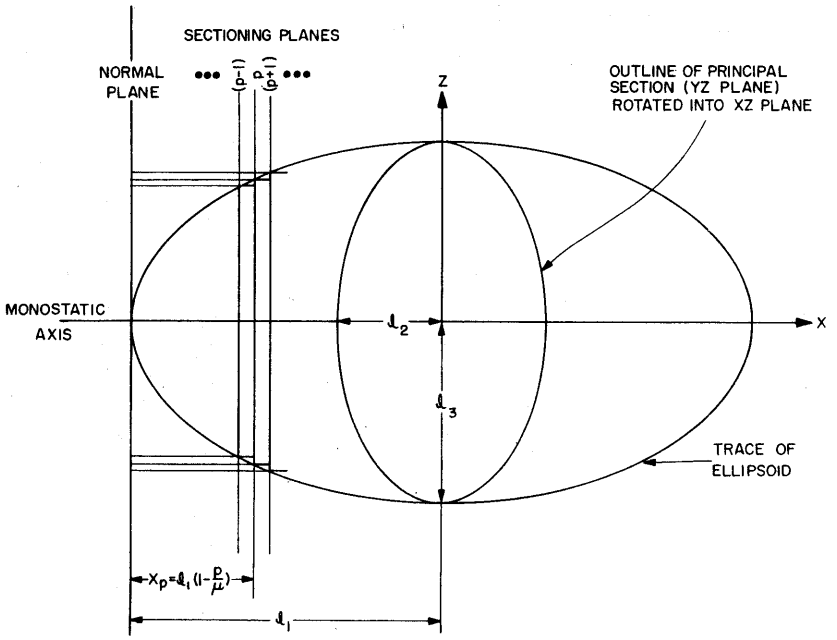

Fig. 4 – The geometry of monostatic reflection from an ellipsoid

This equation, however, may be written

$$\varphi_r(\mu) = \frac{\ell_2 \ell_3}{\ell_1^2}\left[-\frac{i\alpha\alpha' kB}{2r_r}\left(\frac{\ell_1}{\mu}\right)^2 \sum_{p=1}^{\mu} (2\mu - 2p + 1)\exp\left(-2ik\frac{p\ell_1}{\mu}\right)\right]. \tag{17}$$

Now the expression within the brackets of Eq. (17) is just the reflected velocity potential from a sphere of radius ℓ_1, so that

$$[\varphi_r(\mu)]_{Ellipsoid} = \left(\frac{\ell_2 \ell_3}{\ell_1^2}\right)[\varphi_r(\mu)]_{Sphere}, \tag{18}$$

if the correspondence between the two reflecting bodies is drawn only when the distance between the normal plane and the μth sectioning plane is the same for both. Therefore, the expressions for the ellipsoid, corresponding to Eqs. (7)-(9) for the sphere, may be written down directly. In particular, Eqs. (8) and (9) become for the ellipsoid

$$\varphi_r = \left(\frac{i\alpha\alpha' B}{4kr_r}\right)\left(\frac{\ell_2 \ell_3}{\ell_1^2}\right)[\exp(-2ik\ell_1) + 2ik\ell_1 - 1] \tag{19}$$

and

$$|\varphi_r| = \frac{|B|}{r_r}\left(\frac{\ell_2 \ell_3}{\ell_1^2}\right)\left(\frac{\ell_1}{2}\right)\left(\frac{\sin^2(k\ell_1)}{(k\ell_1)^2} - \frac{\sin(2k\ell_1)}{k\ell_1} + 1\right)^{1/2}. \tag{20}$$

The ellipsoid formulae contain as special cases the reflection formulae for prolate and oblate spheroids at various aspects (*i.e.*, orientations of the object with respect to the monostatic axis)

TABLE 1
Reflection Characteristics of the Rigid Ellipsoid and Its Special Cases

Reflecting Object	Aspect*	Geometrical Conditions	General Elemental Area ($\Delta a_p'$)	Magnitude of the Reflected Velocity Potential [$\lvert\varphi_r\rvert$]
Ellipsoid	Along a Principal Axis	$\ell_1 \neq \ell_2 \neq \ell_3$	$\frac{\pi \ell_2 \ell_3}{\mu^2}(2\mu - 2p + 1)$	$\frac{\lvert B\rvert}{r_r}\left(\frac{\ell_2 \ell_3}{\ell_1^2}\right)\left(\frac{\ell_1}{2}\right)\left(\frac{\sin^2(k\ell_1)}{(k\ell_1)^2} - \frac{\sin(2k\ell_1)}{k\ell_1} + 1\right)^{1/2}$
Sphere	Any	$\ell_1 = \ell_2 = \ell_3$	$\frac{\pi \ell_1^2}{\mu^2}(2\mu - 2p + 1)$	$\frac{\lvert B\rvert}{r_r}\left(\frac{\ell_1}{2}\right)\left(\frac{\sin^2(k\ell_1)}{(k\ell_1)^2} - \frac{\sin(2k\ell_1)}{k\ell_1} + 1\right)^{1/2}$
Prolate Spheroid	End-On	$\ell_1 > \ell_2 = \ell_3$	$\frac{\pi \ell_2^2}{\mu^2}(2\mu - 2p + 1)$	$\frac{\lvert B\rvert}{r_r}\left(\frac{\ell_2}{\ell_1}\right)^2\left(\frac{\ell_1}{2}\right)\left(\frac{\sin^2(k\ell_1)}{(k\ell_1)^2} - \frac{\sin(2k\ell_1)}{k\ell_1} + 1\right)^{1/2}$
Prolate Spheroid	Beam	$\ell_1 = \ell_2 < \ell_3$	$\frac{\pi \ell_1 \ell_3}{\mu^2}(2\mu - 2p + 1)$	$\frac{\lvert B\rvert}{r_r}\left(\frac{\ell_3}{\ell_1}\right)\left(\frac{\ell_1}{2}\right)\left(\frac{\sin^2(k\ell_1)}{(k\ell_1)^2} - \frac{\sin(2k\ell_1)}{k\ell_1} + 1\right)^{1/2}$
Oblate Spheroid	End-On	$\ell_1 < \ell_2 = \ell_3$	$\frac{\pi \ell_2^2}{\mu^2}(2\mu - 2p + 1)$	$\frac{\lvert B\rvert}{r_r}\left(\frac{\ell_2}{\ell_1}\right)^2\left(\frac{\ell_1}{2}\right)\left(\frac{\sin^2(k\ell_1)}{(k\ell_1)^2} - \frac{\sin(2k\ell_1)}{k\ell_1} + 1\right)^{1/2}$
Oblate Spheroid	Beam	$\ell_1 = \ell_2 > \ell_3$	$\frac{\pi \ell_1 \ell_3}{\mu^2}(2\mu - 2p + 1)$	$\frac{\lvert B\rvert}{r_r}\left(\frac{\ell_3}{\ell_1}\right)\left(\frac{\ell_1}{2}\right)\left(\frac{\sin^2(k\ell_1)}{(k\ell_1)^2} - \frac{\sin(2k\ell_1)}{k\ell_1} + 1\right)^{1/2}$

*Orientation of the reflector with respect to the monostatic axis.

as well as the formulae already derived for the sphere. These special cases are described in Table 1. In Table 1 the value of $|\varphi_r|$ given by Eq. (20) is shown in order to demonstrate that at certain aspects the reflection characteristics of diverse bodies can be readily systematized. The similarity in the values of the reflected velocity potential results directly from the fact that the geometrical shapes of the various bodies are alike to the extent that, for each, the *pth* projected elemental area $\Delta a_p'$ contains the expression $2\mu - 2p + 1$. Therefore, the only differences between the various $\Delta a_p'$ are in the coefficients multiplying this expression. Since such a coefficient, in any case, contains only geometrical parameters of a body, it may be brought outside the summation sign in Eq. (4), and the sum may be performed independently of these parameters, or in other words, independently of the particular body being considered.

The similarity of the formulae which give $|\varphi_r|$ for the various bodies in Table 1 permits a simple mnemonic device to be used for reproducing any of these tabulated expressions if one such formula is remembered. For each body, the formula in the table for $|\varphi_r|$ has been written in the form

$$|\varphi_r| = \frac{|B|}{r_r} C \left(\frac{\ell_1}{2}\right)\left(\frac{\sin^2(k\ell_1)}{(k\ell_1)^2} - \frac{\sin(2k\ell_1)}{k\ell_1} + 1\right)^{1/2}, \tag{21}$$

where the coefficient C refers to a particular body at a particular aspect. Then, except for the value of C, the entries are the same for all the bodies listed in Table 1. Therefore, if C can be found quickly for any object, the formula for $|\varphi_r|$ can be directly reproduced for that object. However, the value of C for a particular body is the ratio of the cross-sectional area defined by that body's μth sectioning plane and the cross-sectional area defined by the μth sectioning plane of the sphere whose insonified portion occupies the same distance ℓ_1 on the monostatic axis as does the body in question. Thus, for example, for a prolate spheroid at beam aspect the cross-sectional area defined by the μth sectioning plane is $\pi \ell_1 \ell_3$, while for the corresponding sphere

this area is $\pi \ell_1^2$. The ratio of these two quantities is ℓ_3/ℓ_1, so that Eq. (21) for a prolate spheroid at beam aspect becomes

$$|\varphi_r| = \frac{|B|}{r_r}\left(\frac{\ell_3}{\ell_1}\right)\left(\frac{\ell_1}{2}\right)\left(\frac{\sin^2(k\ell_1)}{(k\ell_1)^2} - \frac{\sin(2k\ell_1)}{k\ell_1} + 1\right)^{1/2}, \tag{22}$$

which is exactly the formula found for this case in Table 1.

Moreover, since the formulae for the various cases of the ellipsoid are related to the sphere formulae by simple multiplying factors, the arguments advanced in connection with the sphere calculations concerning the relationship between summation and integral formulations are valid. Thus, the approximate number of subdivisions that is required for a given degree of correspondence between the reflection integral and the reflection summation formula is known not only for the sphere, but for the ellipsoid and its special cases as well.

REFLECTION FROM A RIGID GENERAL QUADRIC SURFACE

The reflection from such bodies as a cone, a limited elliptic paraboloid, and a limited elliptic hyperboloid can be calculated by applying to each body the methods used to treat the sphere and ellipsoid problems. Rather than calculate the appropriate formulae independently for each body, however, an expression can be derived for reflection from any object whose reflecting surface is generated by a conic section. This expression will be written in terms of a set of general constants common to all the quadric surfaces so generated. By substituting into this formula the particular constants which characterize a given quadric surface, the reflected velocity potential from an object of that shape may be obtained.

Figure 5 shows the XZ plane of Fig. 2. In this plane the trace of the reflecting surface is one of the conic sections. A conic section is defined as the locus of points P whose distance d from a

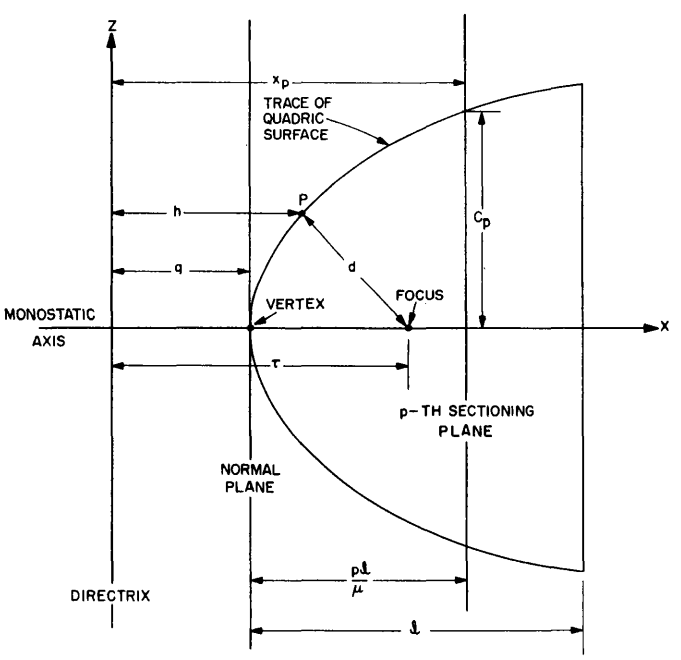

Fig. 5 – The geometry of monostatic reflection from a general quadric surface

fixed point, called the focus, is proportional to its distance h from a fixed line, called the directrix. The constant of proportionality ϵ is called the eccentricity and its magnitude determines the type of conic section defined. For $\epsilon = 0$ the conic is a circle, for $0 < \epsilon < 1$ it is an ellipse, for $\epsilon = 1$ it is a parabola, and for $\epsilon > 1$ it is a hyperbola. If the origin of the coordinate system of Fig. 2 is translated along the X axis until the Z axis lies along the directrix rather than being in the normal plane, the equation for the conic section which represents the trace of the reflecting surface is

$$(1 - \epsilon^2)x^2 - 2\tau x + z^2 + \tau^2 = 0, \tag{23}$$

in which τ is the distance from the directrix to the focus of the conic. The quadric surface generated by rotating the conic described by Eq. (23) about the X axis is given by the equation

$$(1 - \epsilon^2)x^2 - 2\tau x + y^2 + z^2 + \tau^2 = 0. \tag{24}$$

The cross sections of the object defined by Eq. (24) are circular. The corresponding object with elliptical cross sections is defined by the equation

$$(1 - \epsilon^2)x^2 - 2\tau x + y^2/\sigma^2 + z^2 + \tau^2 = 0, \tag{25}$$

where σ is the fineness ratio of any cross-sectional area, that is, the ratio of the lengths of a cross section's principal semiaxes in the y and z directions, respectively. If q is the x coordinate of the normal plane in the coordinate system used in Fig. 5, the x coordinate of the *pth* cross-sectional area of the reflecting object is

$$x_p = q + p\,\ell/\mu \tag{26}$$

when the quadric surface occupies a length ℓ of the X axis. (Thus, the surfaces generated by parabolic and hyperbolic traces must be limited at $x = (q + \ell)$ rather than being limitless in the positive X direction.) Using the value of x_p given by Eq. (26) in Eq. (25) and transposing terms yields

$$y_p^2/\sigma^2 + z_p^2 = C_p^2, \tag{27}$$

where

$$C_p^2 = (\epsilon^2 - 1)\left[q^2 + 2q\frac{p\ell}{\mu} + \left(\frac{p\ell}{\mu}\right)^2\right] - \tau^2 + 2\tau q + 2\tau\frac{p\ell}{\mu}, \tag{28}$$

and y_p and z_p are the y and z coordinates of points on the yz contour that is located at x_p. But since Eq. (27) is the equation of an ellipse, with σC_p and C_p being, respectively, the principal semiaxes in the Y and Z directions,

$$A_p = \pi\sigma C_p^2 \tag{29}$$

is the cross-sectional area defined by the *pth* sectioning plane. The *pth* elemental area projected onto the normal plane, as found using Eqs. (28) and (29), is then

$$\Delta a_p' = A_p - A_{p-1} = \frac{\pi\sigma\ell}{\mu^2}\{[2\mu\epsilon\tau - (\epsilon^2 - 1)\ell] + 2(\epsilon^2 - 1)\ell p\}. \tag{30}$$

In the manipulations which lead to Eq. (30), the relation

$$q = \frac{\tau}{\epsilon + 1} \tag{31}$$

was used to eliminate the explicit dependence of $\Delta a_p'$ on q. Equation (31) follows directly from $d \equiv \epsilon h$, the defining equation for a conic section.

Equation (30) is used in the reflection summation formula [Eq. (4)] with the result that

$$\begin{aligned}\varphi_r(\mu) = \frac{-i\alpha\alpha' Bk}{2r_r}\frac{\sigma\ell}{\mu^2}&\left\{\frac{\exp\left(-2ik\frac{\ell}{\mu}\right)}{\left[\exp\left(-2ik\frac{\ell}{\mu}\right)-1\right]^2}\right\}\Big\{[2\mu\epsilon\tau - (\epsilon^2-1)\ell] \\ &\times [\exp(-2ik\ell)-1]\,[\exp(-2ik\ell/\mu)-1] \\ &+ [2\mu\ell(\epsilon^2-1)]\,[\exp(-2ik\ell)]\left[\exp\left(-2ik\frac{\ell}{\mu}\right)-1\right] \\ &- [2\ell(\epsilon^2-1)]\,[\exp(-2ik\ell)-1]\Big\}.\end{aligned} \tag{32}$$

Similarly, the limiting form of Eq. (32) as μ increases without bound is

$$\begin{aligned}\varphi_r = -\frac{i\alpha\alpha' B\sigma}{4kr_r}\exp(-2ik\ell)\,&\{2i\epsilon k\tau\,[1-\exp(2ik\ell)] \\ &+ 2ik\ell(\epsilon^2-1) + (\epsilon^2-1)\,[1-\exp(2ik\ell)]\},\end{aligned} \tag{33}$$

which gives the reflected velocity potential φ_r according to the reflection integral [Eq. (3)]. The magnitude of the reflected velocity potential is

$$\begin{aligned}|\varphi_r| = \frac{|B|}{r_r}\sigma\left(\frac{\ell}{2}\right)&\Big\{(1-\epsilon^2)^2 - (\epsilon^2-1)^2\frac{\sin(2k\ell)}{k\ell} \\ &+ [(\epsilon^2-1)^2 + (2\epsilon k\tau)^2 + 4\epsilon k^2\ell\tau(\epsilon^2-1)]\frac{\sin^2(k\ell)}{(k\ell)^2}\Big\}^{1/2}\end{aligned} \tag{34}$$

As indicated by Table 2, Eqs. (30) and (34) for the general case of a reflecting quadric surface can be specialized to specific shapes. The ellipsoid formulae previously determined (Table 1) are found again. The sphere formulae result as limiting cases of these ellipsoid formulae when $\ell_2 (= \ell_3)$ approaches ℓ_1. The sphere must be treated in this way when using the general quadric-surface formulae because the product $\epsilon\tau$ which appears in all of these equations does not become zero when ϵ goes to zero. The reason this occurs can be seen by examining the relation between ϵ and τ in the case of an ellipse of semimajor axis ℓ_1 and semiminor axis ℓ_3 (Fig. 4). Using (a) the expression $d \equiv \epsilon h$ that is the defining equation of this conic section, (b) Eq. (31), and (c) the fact that the ellipse's semi-interfocal distance s divided by ℓ_1 is equal to its eccentricity, the quantity τ may be expressed by

$$\tau = (\ell_1/\epsilon)\,(1-\epsilon^2). \tag{35}$$

Equation (35) defines τ only for $\epsilon \neq 0$, but the product

$$\epsilon\tau = \ell_1(1-\epsilon^2) \tag{36}$$

TABLE 2

Reflection Characteristics of Rigid Quadric Surfaces

Reflecting Object	Geometrical Conditions			Refer to Figure	General Elemental Area ($\Delta a_p'$)	Magnitude of the Reflected Velocity Potential ($\lvert\varphi_r\rvert$)
	σ	ϵ	$\epsilon\tau$			
Ellipsoid	$\frac{\ell_2}{\ell_3}$	$\sqrt{1-(\ell_3/\ell_1)^2}$	$\ell_1\left(\frac{\ell_3}{\ell_1}\right)^2$	4	$\frac{\pi\ell_2\ell_3}{\mu^2}(2\mu-2p+1)$	$\frac{\lvert B\rvert}{r_r}\left(\frac{\ell_2\ell_3}{\ell_1^2}\right)\left(\frac{\ell_1}{2}\right)\left\{1-\frac{\sin(2k\ell_1)}{k\ell_1}+\frac{\sin^2(k\ell_1)}{(k\ell_1)^2}\right\}^{1/2}$
Sphere	1	0	ℓ_1	3	$\pi\left(\frac{\ell_1}{\mu}\right)^2(2\mu-2p+1)$	$\frac{\lvert B\rvert}{r_r}\left(\frac{\ell_1}{2}\right)\left\{1-\frac{\sin(2k\ell_1)}{k\ell_1}+\frac{\sin^2(k\ell_1)}{(k\ell_1)^2}\right\}^{1/2}$
Limited (Circular) Hyperboloid	1	$\frac{b_3}{b_1}$	$\frac{b_2^2}{b_1}$	6	$\pi\left(\frac{b_2}{b_1}\right)^2\left(\frac{\ell}{\mu}\right)^2\left[2\left(\frac{b_1}{\ell}\right)\mu+2p-1\right]$	$\frac{\lvert B\rvert}{r_r}\left(\frac{b_2}{b_1}\right)^2\left(\frac{\ell}{2}\right)\left\{1-\frac{\sin(2k\ell)}{k\ell}+\left[1+(2kb_1)^2+\left(\frac{\ell}{b_1}\right)(2kb_2)^2\right]\frac{\sin^2(k\ell)}{(k\ell)^2}\right\}^{1/2}$
Limited (Circular) Cone	1	$\sqrt{1+\tan^2\psi}$	0	7	$\pi(\tan^2\psi)\left(\frac{\ell}{\mu}\right)^2(2p-1)$	$\frac{\lvert B\rvert}{r_r}(\tan^2\psi)\left(\frac{\ell}{2}\right)\left\{1-\frac{\sin(2k\ell)}{k\ell}+\frac{\sin^2(k\ell)}{(k\ell)^2}\right\}^{1/2}$
Limited (Circular) Paraboloid	1	1	$\frac{g^2}{2\ell}$	8	$\frac{\pi g^2}{\mu}$	$\frac{\lvert B\rvert}{r_r}\left(\frac{g}{\ell}\right)^2\left(\frac{\ell}{2}\right)\lvert\sin(k\ell)\rvert$

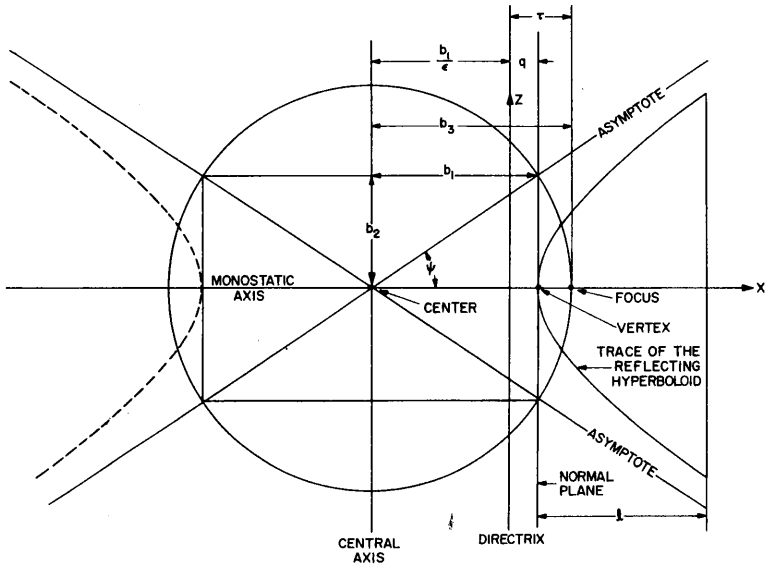

Fig. 6 – The geometry of monostatic reflection from a limited (circular) hyperboloid

equals ℓ_1 when $\epsilon = 0$. Thus, since τ increases without bound as ϵ approaches zero, individual values of ϵ and τ cannot simply be inserted into the quadric-surface formulae in the case of the sphere. Equation (36) must be employed instead. Since Eq. (36) is derived by use of the ellipse formulae, it is seen that the ellipsoid must be considered before it is possible to derive the sphere relations from general formulae.

The results of the application of the quadric-surface formulae to a circular* hyperboloid of limited extent are given in Table 2. The variables used to express the formula for a reflecting hyperboloid are a commonly used set, and their geometrical interpretation is shown in Fig. 6. The trace of this hyperboloid is one branch of a pair of hyperbolae which are symmetrically disposed about a central axis. The central axis lies midway between the vertices of the two branches and is perpendicular to the X axis. The distances from this central axis to the vertex and to the focus of this hyperbola are, respectively, b_1 and b_3. The distance b_1 is known as the semitransverse axis of the hyperbola. A quantity $b_2 = (b_3^2 - b_1^2)^{1/2}$ is also defined and is known as the semiconjugate axis. The asymptotes of the hyperbolic trace meet at the intersection of the central and the X axes, and as seen from Fig. 6 there exists the relation

$$b_2/b_1 = \tan \psi,$$

where ψ is the angle between an asymptote and the X axis.

The results for the reflection from a limited circular cone (Fig. 7) can be determined as limiting forms of the equations found for the hyperboloid. A circular cone of semiapex angle ψ can be defined by the asymptotes of the hyperboloid's trace. These asymptotes are obtained from the equations of a hyperbola by allowing both b_1 and b_3 to approach zero but in such a way that the ratio $b_2/b_1 = \tan \psi$ remains constant. This limiting process transforms the hyperboloid equations into the relations shown in Table 2 for the reflecting, limited, right-circular cone. It is interesting to note that, for the cone, the expression for $|\varphi_r|$ given in the table has the form of Eq. (21), with $C = \tan^2\psi$. Moreover, the coefficient C can be found as the ratio of

*While the general quadric-surface formulae can be readily applied to hyperboloids and other conic-section-generated bodies that have elliptical cross sections, no useful purpose is served by explicitly treating the cases of $\sigma \neq 1$ when describing quadric-surface reflectors in the remainder of this section of the report.

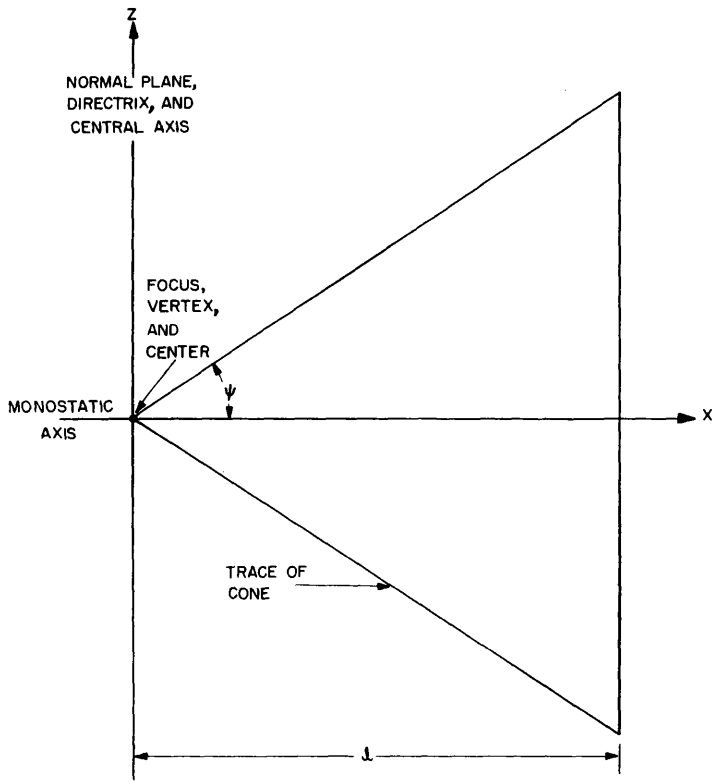

Fig. 7 — The geometry of monostatic reflection from a limited (circular) cone

the μth cross-sectional area of the cone to the corresponding μth cross-sectional area of a sphere whose radius is equal to the base-to-apex height ℓ of the cone.

The relations for a circular paraboloid (Fig. 8) are also found in Table 2, and for this case the resulting formulae are particularly simple. As shown in Fig. 9, the magnitude of the reflected velocity potential varies periodically between zero and $|B|g^2/2r_r\ell$ as $k\ell$ is increased. This regularity occurs due to the nature of the elemental areas $\Delta a_p'$ and may be explained as follows.

Since the value of $\Delta a_p'$ does not depend on p, the elemental areas are all of the same size and the only difference between the contributions of any two elemental areas to the total reflected velocity potential is in their relative phases. Suppose that the subdivisions of the paraboloid are chosen at constant intervals of length $\Delta\ell$ along the x axis and consider the contribution from each elemental area so defined to be a vector in the complex plane that has a constant modulus equal to the common value of $\Delta a_p'$ and a phase angle of $-2pk\Delta\ell$, where p is the number of the subdivision, as before. Initially consider only paraboloids having $0 \leqslant k\ell \leqslant \pi$. The elemental vectors may be geometrically added head-to-tail as shown in Fig. 10(a). The vector resultant is the velocity potential reflected by the entire paraboloid for the particular value of $k\ell$ chosen, and the modulus of this vector is the ordinate of Fig. 9. This resultant has a modulus which grows to a maximum at $k\ell = \pi/2$ and then decreases to zero when $k\ell$ is increased sufficiently for the contributions to have a combined phase of 2π radians. In this latter case, the broken line formed by the elemental vectors will close on itself as a polygon [Fig. 10(b)]. This closed vector polygon corresponds to the null in the curve that occurs at $k\ell = \pi$ That is, this null occurs when the combined effect of all the reflected contributions is zero due to their mutual interference. Therefore, if a portion of the paraboloid completely occupies the X axis between

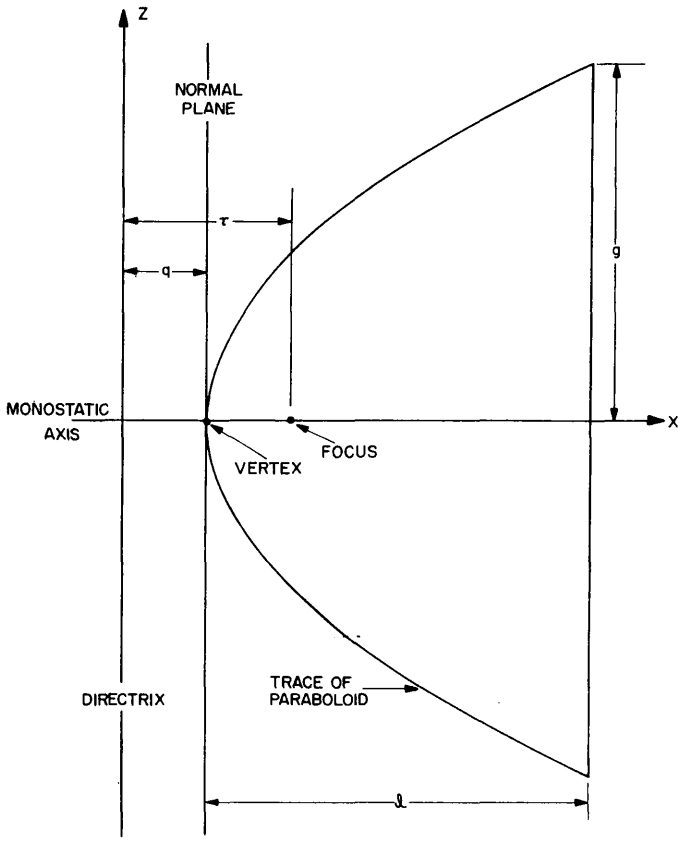

Fig. 8 — The geometry of monostatic reflection from a limited (circular) paraboloid

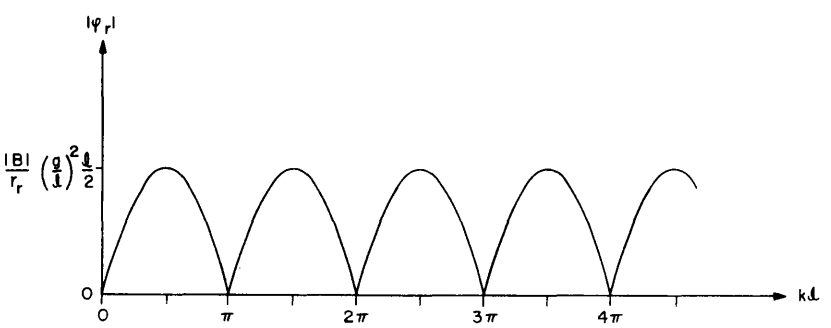

Fig. 9 — Reflection characteristics of a limited paraboloid showing the variation of the magnitude of the reflected velocity potential $|\varphi_r|$ as a function of the size parameter $k\ell$

the normal plane and a parallel plane passing through the object at a half-wavelength's distance from the normal plane (*i.e.*, a plane at $k\ell = \pi$), this portion will contribute nothing to the total reflected velocity potential. This implies that for $k\ell > \pi$, only the contributions from the portion of the paraboloid lying beyond the plane at $k\ell = \pi$ need be considered when composing vector diagrams. Also, between $k\ell = \pi$ and $k\ell = 2\pi$ the vector diagram is indistinguishable from

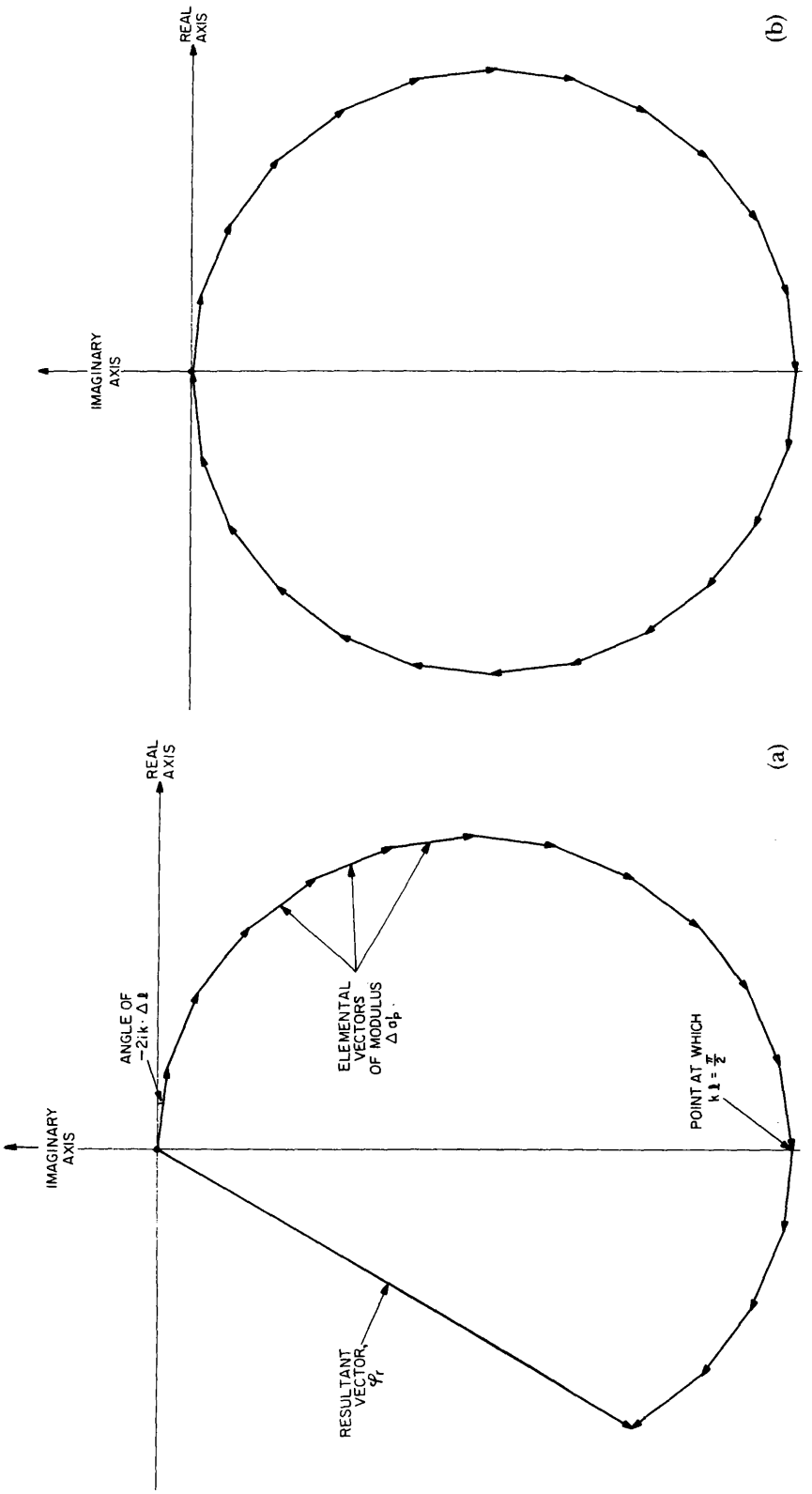

Fig. 10 — Composition of the velocity potential reflected from a limited paraboloid in terms of the contributions from its individual elemental areas for (a) $0 < kl < \pi$ and (b) $kl = \pi$

Fig. 10(a), which is obtained for the range $0 \leq k\ell \leq \pi$, because there is a one-to-one correspondence between the elemental vectors in the two cases. That is, in both cases all of the elemental vectors have the same modulus and the corresponding vectors in the two cases differ in phase only by 2π radians. Thus, between $k\ell = \pi$ and $k\ell = 2\pi$, the modulus of the vector representing φ_r grows to a maximum and decays to zero as before, and the cycle of variation in the curve of Fig. 9 is the same in this range as it was for $0 \leq k\ell \leq \pi$. Again it will be noted that when $k\ell = 2\pi$ there is a null in the $|\varphi_r|$ curve and the contributions from the elements of a paraboloid between planes at $k\ell = \pi$ and $k\ell = 2\pi$ will mutually cancel so that, if $k\ell > 2\pi$, only contributions from elements lying beyond the $k\ell = 2\pi$ plane will contribute to the resultant φ_r vector. Between all other $k\ell$ values that are integral multiples of π the velocity potential behaves similarly, so the $|\varphi_r|$ curve of Fig. 9 again and again grows to a maximum and decays to a null in identical cycles. Strictly, of course, the plot of $|\varphi_r|$ *vs.* $k\ell$ in Fig. 9 corresponds to the limiting case when the subdivisions of the paraboloid are vanishingly small in size and infinitely great in number. For this situation, the broken line of Fig. 10(a) becomes a smooth curve in the complex plane and the polygon of Fig. 10(b) becomes a circle.

It is interesting to compare the expression for the velocity potential reflected from the paraboloid with an expression for the velocity potential reflected from a rigid finite plane (5). The velocity potential reflected from such a plane, which has dimensions w_1 and w_2 and is tilted at an angle Θ with respect to the monostatic axis, is

$$\varphi_r = \frac{\alpha\alpha' B w_1}{4\pi r_r \tan\Theta} \left[\exp(-2ik\ell) - 1\right], \tag{37}$$

where ℓ is the distance from the normal plane to the most distant edge of the reflector, as shown in Fig. 11. The corresponding equation for the paraboloid is

$$\varphi_r = \frac{\alpha\alpha' B}{4r_r} \left(\frac{g^2}{\ell}\right) \left[\exp(-2ik\ell) - 1\right], \tag{38}$$

which may be written, using the constant K, as

$$\varphi_r = \frac{\alpha\alpha' B}{4r_r} K \left[\exp(-2ik\ell) - 1\right] \tag{39}$$

because in a coordinate system, such as that shown in Fig. 2, with the Z axis in the normal plane, the equation for the parabolic trace may be written $x = z^2/K$. Equations (37) and (39) do not differ in any essential respect because the size of the elemental areas $\Delta a_p'$ does not vary with p either in the case of the tilted plane or in the case of the paraboloid. Therefore, a consequence of the restricted theory of reflection being used is that the tilted plane and the paraboloid behave similarly when used as reflectors, even though their geometry is greatly different.

REFLECTION FROM RIGID QUADRIC SEGMENTS AND FRUSTUMS

The equations developed in the previous section can be applied in order to calculate the velocity potential reflected from objects which are portions of the quadric-surface reflectors treated there. For example, the reflection from a spherical or ellipsoidal segment (*i.e.*, that portion of a sphere or ellipsoid lying between the normal plane and a parallel plane which is separated from the normal plane by a distance less than the radius of the sphere, or less than

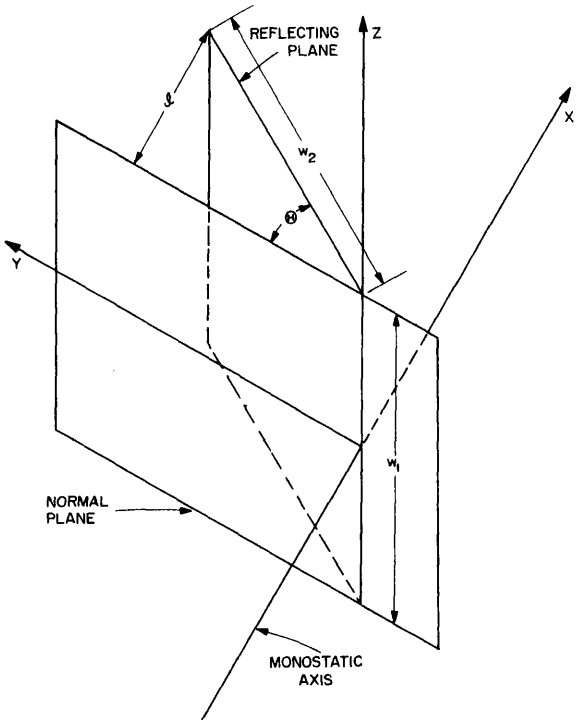

Fig. 11 – The geometry of monostatic reflection from a finite rectangular plane, tilted with respect to the monostatic axis

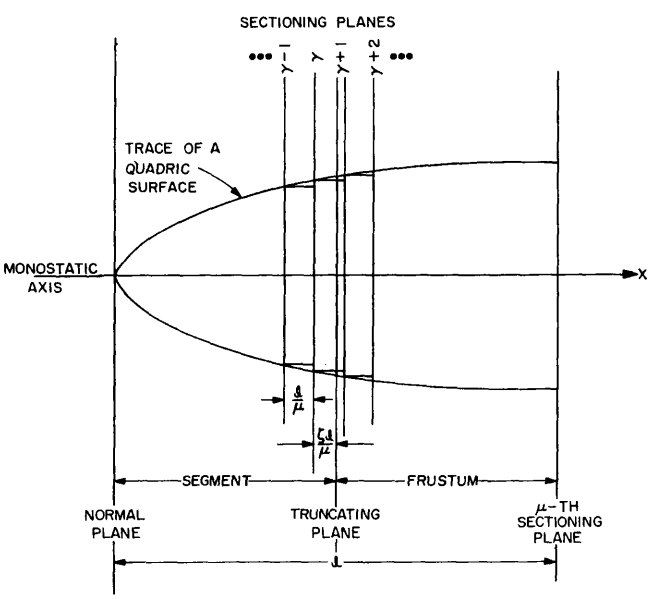

Fig. 12 – The geometry of monostatic reflection from a quadric-surface segment or frustum

the length of that principal axis of the ellipsoid which lies in the direction of the monostatic axis) can be found. Or again, the reflection from the frustum of a truncated cone may be calculated. In general, the velocity potential reflected from the segment portion and from the frustum portion of any quadric-surface reflector can be found from the formulae already derived.

Figure 12 shows a reflector defined by a general quadric surface which has been divided by passing a *truncating plane* through the object parallel to the normal plane and between the γth and the $(\gamma + 1)th$ sectioning planes. The number γ can be written as a fraction of the total number of subdivisions μ into which the object is divided

$$\gamma = m\mu$$

with $0 \leq m \leq 1$ being a rational number. If the segment portion of the reflector between the normal plane and the truncating plane remains as the reflecting object and the rest of the original body is removed, then a length $m\ell$ of the monostatic axis is occupied by this segment in the limiting case when $\mu \to \infty$. But Eqs. (33) and (34) are general, and the only restriction on the parameter ℓ therein is that it represents the length of the monostatic axis occupied by the insonified portion of a reflector. Therefore, since the insonified portion of the quadric-segment reflector occupies length $m\ell$ of the monostatic axis, Eqs. (33) and (34) may be written as

$$\varphi_r = -\frac{i\alpha\alpha' B\sigma}{4kr_r} \exp(-2ikm\ell)\ \{2i\epsilon k\tau[1 - \exp(2ikm\ell)]$$
$$+ 2i(\epsilon^2 - 1)km\ell + (\epsilon^2 - 1)\ [1 - \exp(2ikm\ell)]\} \tag{40}$$

and

$$|\varphi_r| \doteq \frac{|B|}{r_r}\sigma\left(\frac{m\ell}{2}\right)\left\{(1-\epsilon^2)^2 - (\epsilon^2-1)^2\frac{\sin(2km\ell)}{km\ell}\right.$$
$$\left. + [(\epsilon^2-1)^2 + (2\epsilon k\tau)^2 + 4\epsilon k^2 m\ell\tau(\epsilon^2-1)]\frac{\sin^2(km\ell)}{(km\ell)^2}\right\}^{1/2} \tag{41}$$

by directly replacing ℓ in those expressions with $m\ell$. Thus, for example, for a segment of the sphere of radius ℓ which has been treated previously, Eq. (41) becomes

$$|\varphi_r| = \frac{|B|}{r_r}\left(\frac{m\ell}{2}\right)\left\{1 - \frac{\sin(2km\ell)}{km\ell} + [1 + (1-m)(2k\ell)^2]\frac{\sin^2(km\ell)}{(km\ell)^2}\right\}^{1/2} \tag{42}$$

when the truncating plane defines a segment with a *sagital distance* (*i.e.*, the distance measured along the monostatic axis between the truncating plane and the normal plane) of length $m\ell$, with $0 \leq m \leq 1$.

However, substituting the quantity $m\ell$ for ℓ in Eq. (32) does not result in the reflected velocity potential according to the summation formula. This is because the segment is not divided into μ subdivisions but into γ subdivisions, or in other words, μ must be associated with the length ℓ and not with the length $m\ell$. The approximate velocity potential reflected from the segment is given by the expression

$$\varphi_r(\gamma) = \frac{-i\alpha\alpha' kB}{2\pi r_r}\sum_{p=1}^{\gamma}\Delta a_p' \exp\left(-2ik\frac{p\ell}{\mu}\right) \tag{43}$$

which is the sum taken only over those subdivisions occupied by the segment rather than over the μ subdivisions contained in the length ℓ. Of course, when the summation of Eq. (43) is performed and γ is replaced with $m\mu$, Eq. (40) results, in the limit, when μ increases without bound.

Using the results derived in previous sections and the formulae just derived for reflecting segments, the reflection from frustum portions of the objects defined by quadric surfaces can be found. When a segment of a reflector is removed there are two surfaces which contribute to the velocity potential reflected from the remaining frustum: (a) the disk (in general, elliptically shaped) which is the cross section of the object defined by the truncating plane, and (b) the remaining peripheral surface between the truncating plane and the μth sectioning plane. The contribution from the disk may be treated as the velocity potential reflected by a plane elemental area. If the truncating plane divides the γth subdivision of the original complete object at a distance $\zeta\ell/\mu$ from the γth sectioning plane, where $0 \leqslant \zeta \leqslant 1$, then the contribution of the disk portion in the case of finite-sized subdivisions is

$$\varphi_r(\mu)_{disc} = -\frac{i\alpha\alpha' kB}{2\pi r_r} A_\gamma \exp\left[-2ik\left(\frac{\gamma\ell}{\mu} + \frac{\zeta\ell}{\mu}\right)\right], \tag{44}$$

where A_γ is the cross-sectional area defined by the γth sectioning plane. The contribution from the peripherial surface of the frustum is

$$\varphi_r(\mu)_{surface} = -\frac{i\alpha\alpha' kB}{2\pi r_r} \sum_{p=\gamma+1}^{\mu} \Delta a'_p \exp\left(-2ik\frac{p\ell}{\mu}\right) \tag{45}$$

since such a summation carried out from $p=1$ to $p=\gamma$ gives the contribution of the segment portion previously considered [Eq. (43)]. Therefore, in the case of finite-sized subdivisions, the velocity potential reflected by the frustum due to both contributing surfaces is given by

$$\varphi_r(\mu)_{frustum} = \varphi_r(\mu)_{disc} + \varphi_r(\mu)_{surface},$$

that is

$$\begin{aligned}\varphi_r(\mu)_{frustum} = &\left(-\frac{i\alpha\alpha' kB}{2\pi r_r}\right)\left\{A_\gamma \exp\left[-2ik\left(\frac{\gamma\ell}{\mu} + \frac{\zeta\ell}{\mu}\right)\right]\right\} \\ &+ \left(-\frac{i\alpha\alpha' kB}{2\pi r_r}\right)\left[\sum_{p=\gamma+1}^{\mu} \Delta a'_p \exp\left(-2ik\frac{p\ell}{\mu}\right)\right]\end{aligned} \tag{46}$$

using Eqs. (44) and (45). But

$$\begin{aligned}\left(-\frac{i\alpha\alpha' kB}{2\pi r_r}\right)\left[\sum_{p=\gamma+1}^{\mu} \Delta a'_p \exp\left(-2ik\frac{p\ell}{\mu}\right)\right] = &\left(-\frac{i\alpha\alpha' kB}{2\pi r_r}\right)\left[\sum_{p=1}^{\mu} \Delta a'_p \exp\left(-2ik\frac{p\ell}{\mu}\right)\right] \\ &- \left(-\frac{i\alpha\alpha' kB}{2\pi r_r}\right)\left[\sum_{p=1}^{\gamma} \Delta a'_p \exp\left(-2ik\frac{p\ell}{\mu}\right)\right].\end{aligned}$$

Therefore, referring to Eqs. (4) and (43), the contribution of reflected velocity potential from the peripheral surface of the frustum is the contribution from the original, complete object minus the contribution from the segment removed in order to form the frustum, that is, Eq. (46) may be written

$$\varphi_r(\mu)_{frustum} = \left(-\frac{i\alpha\alpha' kB}{2\pi r_r}\right)\left\{A_\gamma \exp\left[-2ik\left(\frac{\gamma\ell}{\mu}+\frac{\zeta\ell}{\mu}\right)\right]\right\} + \varphi_r(\mu) - \varphi_r(\gamma). \tag{47}$$

Now if, as before, $\gamma = m\mu$, then according to Eqs. (28) and (29) the γth cross-sectional area is given by

$$A_\gamma = \pi\sigma m\ell[2\epsilon\tau + m\ell(\epsilon^2 - 1)] \tag{48}$$

regardless of the number of subdivisions μ. In the limiting case of Eq. (47), when μ increases without bound, Eqs. (33) and (40) can be used along with Eq. (48) to write the velocity potential reflected by the frustum as follows:

$$\begin{aligned}\varphi_r = &\left(-\frac{i\alpha\alpha' kB}{2\pi r_r}\right)\{\pi\sigma m\ell\,[2\epsilon\tau + m\ell(\epsilon^2-1)]\exp(-2ikm\ell)\}\\
&+\left(-\frac{i\alpha\alpha' B\sigma}{4kr_r}\right)\exp(-2ik\ell)\,\{2i\epsilon k\tau\,[1-\exp(2ik\ell)]\\
&+2ik\ell(\epsilon^2-1)+(\epsilon^2-1)\,[1-\exp(2ik\ell)]\}\\
&-\left(-\frac{i\alpha\alpha' B\sigma}{4kr_r}\right)\exp(-2ikm\ell)\,\{2i\epsilon k\tau\,[1-\exp(2ikm\ell)]\\
&+2ikm\ell(\epsilon^2-1)+(\epsilon^2-1)\,[1-\exp(2ikm\ell)]\}.\end{aligned}$$

This expression may be further simplified to the form

$$\begin{aligned}\varphi_r = &\left(-\frac{i\alpha\alpha' B\sigma}{4kr_r}\right)\exp(-2ik\ell)\,\{2km\ell\,[2\epsilon k\tau + km\ell(\epsilon^2-1)]\exp[2ik\ell\,(1-m)]\\
&+2i\epsilon k\tau\,(1-\exp[2ik\ell\,(1-m)])\\
&+2i(\epsilon^2-1)k\ell\,(1-m\exp[2ik\ell\,(1-m)])\\
&+(\epsilon^2-1)\,(1-\exp[2ik\ell\,(1-m)])\}.\end{aligned} \tag{49}$$

Equation (49) gives the velocity potential reflected from the frustum portion of any of the quadric-surface reflectors previously considered. This is the velocity potential according to the reflection integral in the case when the original body is divided by the truncating plane at a distance $m\ell$ from the normal plane, with $0 \leq m \leq 1$.

REFLECTION FROM A SHORT, RIGID, RIGHT-CIRCULAR CYLINDER AT BEAM ASPECT

In the previous sections of this report, the methods used to calculate the velocity potential reflected from simply shaped objects all depend on the fact that, for these objects, the expressions for the projected elemental areas $\Delta a_p'$ are relatively simple. This allows an expression for $\Delta a_p'$ to be used in the reflection summation formula and the necessary summation performed. The reflected velocity potential obtained by passing to the limit of the summation-formula result is the same as that given by the reflection integral, although no direct integration has to

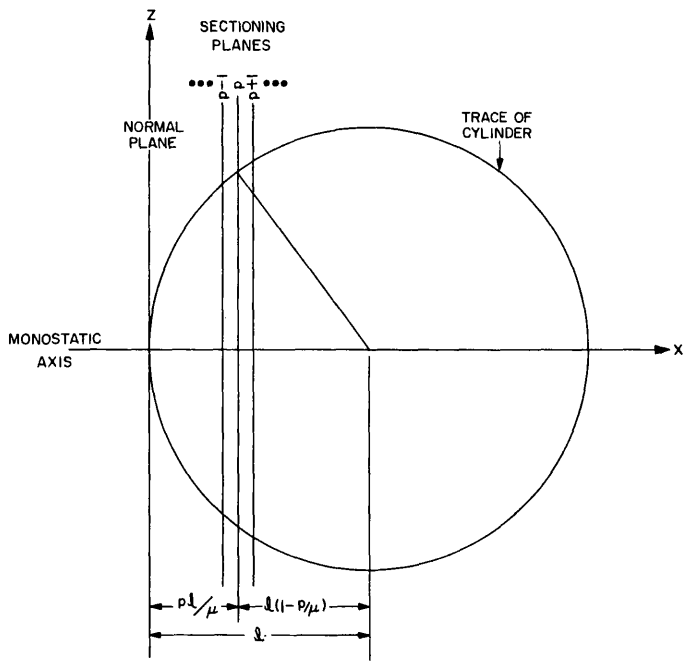

(a)

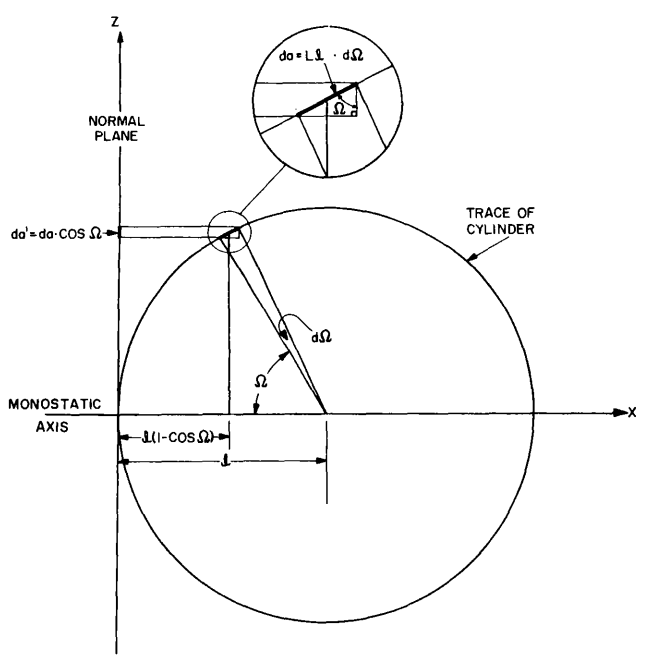

(b)

Fig. 13 — The geometry of monostatic reflection from a short right-circular cylinder at beam aspect when (a) the reflection summation formula [Eq. (4)] is used for calculation and (b) the reflection integral [Eq. (3)] is used for calculation

be performed to obtain it. However, for other reflecting objects, and not necessarily very complicated ones, the elemental areas are not given by a simple expression and it is necessary to use the reflection integral [Eq. (3)] in order to calculate the reflected velocity potential. Of course, the implication here is not that the reflection summation formula [Eq. (4)] is not applicable to certain objects, but only that there are objects for which the algebraic problem of reducing an expression from the form of Eq. (4) to a form which would be analogous to Eq. (7) is not tractable due to the form of the $\Delta a_p'$ involved in the calculations. One such object is the short right-circular cylinder with its axis of symmetry normal to the monostatic axis (*i.e.*, at beam aspect).

The cylinder of length L and radius ℓ is shown in Fig. 13(a) as it would be seen in the XZ plane of Fig. 2. The cross sections are rectangular, and the area of the *pth* such section is

$$A_p = \frac{2L\ell}{\mu}\sqrt{2\mu p - p^2},$$

while the $(p-1)th$ area is

$$A_{p-1} = \frac{2L\ell}{\mu}\sqrt{2(\mu+1)p - p^2 - (2\mu+1)}.$$

The projected elemental area $\Delta a_p'$ then is

$$\Delta a_p' = \frac{2L\ell}{\mu}\left(\sqrt{2\mu p - p^2} - \sqrt{2(\mu+1)p - p^2 - (2\mu+1)}\right). \tag{50}$$

This expression cannot be significantly simplified, and when it is substituted into Eq. (4) the resulting summation is too complicated to be performed using straightforward algebraic techniques. Because of this, the reflected velocity potential is calculated for the cylinder according to Eq. (3).

The cylinder at beam aspect is again pictured in Fig. 13(b), which shows the parameters needed in this calculation. The infinitesimal elemental areas da are defined by the angular variable Ω and its infinitesimal increment $d\Omega$ as shown in the figure, with $-\pi/2 \leq \Omega \leq \pi/2$. Then these elemental areas are strips of length L and width $\ell d\Omega$ so that $da = L\ell d\Omega$. It is easily shown that the projection da' of da upon the normal plane is $da \cos \Omega$ so that

$$da' = L\ell \cos \Omega \, d\Omega. \tag{51}$$

From the figure it is also apparent that Δr, the distance from a given elemental area to the normal plane, is equal to $\ell(1 - \cos \Omega)$. Therefore, using this value of Δr and the value of da' given by Eq. (51), the reflection integral for the cylinder, according to Eq. (3), is

$$\varphi_r = -\frac{i\alpha\alpha' kB}{2\pi r_r}(\ell L)\exp(-2ik\ell)\int_{-\pi/2}^{\pi/2}[\exp(2ik\ell\cos\Omega)]\cos\Omega\, d\Omega. \tag{52}$$

The integral in Eq. (52) can be solved as shown in Appendix B. The velocity potential reflected from a cylinder at beam aspect is then

$$\varphi_r = -\frac{i\alpha\alpha' kB}{2\pi r_r}(\ell L)\exp(-2ik\ell)\,[2J_0(2k\ell) + i\pi J_1(2k\ell) - 4S(2k\ell)], \tag{53}$$

where $J_0(2k\ell)$ and $J_1(2k\ell)$ are ordinary Bessel functions of orders zero and one, respectively, and $S(2k\ell)$ is defined by

$$S(2k\ell) = \sum_{j=1}^{\infty} \frac{J_{2j}(2k\ell)}{(2j)^2 - 1}, \qquad (j = 1, 2, 3, \ldots), \tag{54}$$

where $J_{2j}(2k\ell)$ is an ordinary Bessel function with (integral) order $2j$. The magnitude of the velocity potential then is

$$|\varphi_r| = \frac{|B|}{r_r}\left(\frac{2k\ell L}{\pi}\right)\left\{\left[S(2k\ell) - \frac{1}{2}J_0(2k\ell)\right]^2 + \left(\frac{\pi}{4}\right)^2 [J_1(2k\ell)]^2\right\}^{1/2}. \tag{55}$$

The inappropriateness of applying the summation formula in the analytic treatment of the cylinder problem is also apparent from the forms of φ_r and $|\varphi_r|$ obtained using the integral method embodied in Eq. (3). The deduction of the Bessel-function forms from a finite sum of simpler algebraic and exponential functions ($\Delta a_p'$ and $\exp[-2ik(p\ell/\mu)]$, specifically) would be a formidable mathematical task.

SUMMARY

By applying the simple theory of reflection discussed in the Introduction, the velocity potential reflected by many objects has been calculated in a systematic way. Similarities in reflection characteristics occur because the many small parts of two different objects can contribute in the same way to the respective total velocity potentials that the objects reflect. That is, if the elemental areas defined by the sectioning planes on one object are similar to those on another, the reflection characteristics for the two bodies will be similar also, even though the bodies themselves are geometrically dissimilar (as in the case of the limited paraboloid and the tilted rectangular plane). The fact that the elemental areas of all the quadric-surface reflectors can be related to one another through the use of one set of geometrical parameters allows a general formula for all such reflectors to be deduced. Similarly, the complicated nature of the elemental areas on the short right-circular cylinder determines the methods needed to calculate the velocity potential reflected from this object. This dependence of reflection characteristics upon the nature of the elemental areas of a given body makes the reflection summation formula [Eq. (4)] very useful in discussing the relations between reflection characteristics and reflector shape. Of course, in general, it is the limiting forms of the summation-formula results that are to be compared. However, discussing these results in terms of the finite number of finite-sized elemental areas employed in this approximate formula gives more insight into the important geometrical characteristics of the reflector than does an attempt to visualize the reflection process directly in terms of the infinitesimal elements involved in the reflection integral formula [Eq. (3)].

REFERENCES

1. Neubauer, W. G., "A Summation Formula for Use in Determining the Reflection from Irregular Bodies," *J. Acous. Soc. Am.* **35**:279 (1963)
2. Willis, F. H., "Reflection and Scattering of Sound," HMA/SEE Fairlie Laboratory Internal Report No. 50 (Confidential Report), December 1941
3. Freedman, A., "The High Frequency Echo Structure of Some Simple Body Shapes," *Acustica* **12**:61 (1962)
4. Saneyoshi, J., "Reflection of Ultrasonic Waves from Finite Bodies," *Bull. Tokyo Inst. Technol.*, Ser B, No. 3, 1958
5. Neubauer, W. G., "Theoretical Analysis of Monostatic Reflection in the Far Field of Rigid, Finite Objects," NRL Report 5467, July 1960

Appendix A

SUMMATION OF THE SERIES $\sum_{p=1}^{\mu} p \exp\left(-2ik \frac{p\ell}{\mu}\right)$

A quantity β is defined by $\beta = -2ik\ell/\mu$. The series to be summed is

$$\Lambda(\mu) = \sum_{p=1}^{\mu} pe^{\beta p}.$$

In calculating $\Lambda(\mu)$, the summation formula for a geometric series is repeatedly used. The well-known formula for the sum of a geometric series is

$$\sum_{p=n}^{\mu} v_p = \frac{Rv_\mu - v_n}{R-1}, \tag{A1}$$

where v_n is the first term in the series, v_μ the last term, and R is the common ratio of successive terms.

The sum $\Lambda(\mu)$ is found by the process

$$\begin{aligned}\Lambda(\mu) &= e^\beta + 2e^{2\beta} + 3e^{3\beta} + \ldots + (\mu-1)e^{(\mu-1)\beta} + \mu e^{\mu\beta} \\ &= \left(\sum_{p=1}^{\mu} e^{\beta p}\right) + e^{2\beta} + 2e^{3\beta} + \ldots + (\mu-2)e^{(\mu-1)\beta} + (\mu-1)e^{\mu\beta} \\ &= \left(\sum_{p=1}^{\mu} e^{\beta p}\right) + \left(\sum_{p=2}^{\mu} e^{\beta p}\right) + e^{3\beta} + \ldots + (\mu-3)e^{(\mu-1)\beta} + (\mu-2)e^{\mu\beta},\end{aligned}$$

etc. This process is continued until $\Lambda(\mu)$ is written

$$\Lambda(\mu) = \left(\sum_{p=1}^{\mu} e^{\beta p}\right) + \left(\sum_{p=2}^{\mu} e^{\beta p}\right) + \left(\sum_{p=3}^{\mu} e^{\beta p}\right) + \ldots + \left(\sum_{p=(\mu-1)}^{\mu} e^{\beta p}\right) + \left(\sum_{p=\mu}^{\mu} e^{\beta p}\right). \tag{A2}$$

But each term in parentheses in this expression is a geometric series. For each of these series the ratio R equals e^β, and the last term v_μ is $e^{\mu\beta}$. The first term v_n for each is $e^{n\beta}$, with $n = 1$ for the first series in parentheses, two for the second, and so on. Therefore, using Eq. (A1), Eq. (A2) becomes

$$\begin{aligned}\Lambda(\mu) &= \frac{e^\beta e^{\mu\beta} - e^\beta}{(e^\beta - 1)} + \frac{e^\beta e^{\mu\beta} - e^{2\beta}}{(e^\beta - 1)} + \frac{e^\beta e^{\mu\beta} - e^{3\beta}}{(e^\beta - 1)} + \ldots \\ &\quad + \frac{e^\beta e^{\mu\beta} - e^{(\mu-1)\beta}}{(e^\beta - 1)} + \frac{e^\beta e^{\mu\beta} - e^{\mu\beta}}{(e^\beta - 1)} \\ &= \frac{1}{(e^\beta - 1)}\left(\mu e^\beta e^{\mu\beta} - \sum_{p=1}^{\mu} e^{\beta p}\right).\end{aligned} \tag{A3}$$

But the last term in the parentheses of Eq. (A3) is again a geometric series, so that

$$\Lambda(\mu) = \frac{e^\beta}{(e^\beta - 1)}\left(\mu e^{\mu\beta} - \frac{e^{\mu\beta} - 1}{e^\beta - 1}\right). \tag{A4}$$

Since $\beta \equiv -2ik\ell/\mu$, the final expression for the required sum is

$$\sum_{p=1}^{\mu} p \exp(-2ik\ell/\mu) = \frac{\exp\left(-2ik\dfrac{\ell}{\mu}\right)}{\exp\left(-2ik\dfrac{\ell}{\mu}\right)-1}\left(\mu \exp(-2ik\ell) - \frac{\exp(-2ik\ell)-1}{\exp\left(-2ik\dfrac{\ell}{\mu}\right)-1}\right). \tag{A5}$$

Appendix B

INTEGRATION OF THE FORM $\int_{-\pi/2}^{\pi/2} [\exp(2ik\ell \cos \Omega)] \cos \Omega \, d\Omega$

The integral to be evaluated is

$$I = \int_{-\pi/2}^{\pi/2} [\exp(2ik\ell \cos \Omega)] \cos \Omega \, d\Omega. \tag{B1}$$

A quantity δ is defined by $\delta \equiv 2k\ell$, and a change of variable is made by defining $\Omega' \equiv (\pi/2) - \Omega$, in which case Eq. (B1) becomes

$$I = \int_0^{\pi} [\exp(i\delta \sin \Omega')] \sin \Omega' \, d\Omega' \tag{B2}$$

$$= \int_0^{\pi} \cos(\delta \sin \Omega') \sin \Omega' \, d\Omega' + i \int_0^{\pi} \sin(\delta \sin \Omega') \sin \Omega' \, d\Omega' \tag{B3}$$

$$= i\pi J_1(\delta) + \int_0^{\pi} \cos(\delta \sin \Omega') \sin \Omega' \, d\Omega' \tag{B4}$$

since the second integral in Eq. (B3) is a special case of the identity

$$J_j(\delta) = (1/\pi) \int_0^{\pi} \sin(\delta \sin \Omega') \sin(j\Omega') \, d\Omega', \tag{B5}$$

where $J_j(\delta)$ is the ordinary Bessel function of odd-integral order j. To solve the first integral of Eq. (B3), the cosine form in its integrand is expanded in a series of cosines having ordinary Bessel functions of integral order as coefficients:

$$\cos(\delta \sin \Omega') = J_0(\delta) + 2 \sum_{j=1}^{\infty} J_{2j}(\delta) \cos(2j\Omega'). \tag{B6}$$

Then,

$$\int_0^{\pi} \cos(\delta \sin \Omega') \sin \Omega' d\Omega' = J_0(\delta) \int_0^{\pi} \sin \Omega' \, d\Omega' + 2 \int_0^{\pi} \sum_{j=1}^{\infty} J_{2j}(\delta) \cos(2j\Omega') \sin \Omega' \, d\Omega'. \tag{B7}$$

The first term in Eq. (B6) is just $2J_0(\delta)$. Since the series

$$\sum_{j=1}^{\infty} J_{2j}(\delta)\cos(2j\Omega')$$

converges uniformly in the interval $0 \leq \Omega' \leq \pi$,

$$\int_0^{\pi} \sum_{j=1}^{\infty} J_{2j}(\delta)\cos(2j\Omega')\sin\Omega'\,d\Omega' = \sum_{j=1}^{\infty}\left(J_{2j}(\delta)\int_0^{\pi}\cos(2j\Omega')\sin\Omega'\,d\Omega'\right). \tag{B8}$$

Collecting terms from Eqs. (B7) and (B8) and substituting them into Eq. (B4) yields

$$I = i\pi J_1(\delta) + 2J_0(\delta) + 2\sum_{j=1}^{\infty}\left(J_{2j}(\delta)\int_0^{\pi}\cos(2j\Omega')\sin\Omega'\,d\Omega'\right). \tag{B9}$$

Now

$$\int_0^{\pi}\cos(2j\Omega')\sin\Omega'\,d\Omega' = \frac{1}{2}\left(\frac{\cos[(2j-1)\Omega']}{2j-1} - \frac{\cos[(2j+1)\Omega']}{2j+1}\right)\Bigg|_0^{\pi}$$

$$= \frac{1}{2j+1} - \frac{1}{2j-1} = -\frac{2}{(2j)^2-1}. \tag{B10}$$

Therefore, using Eq. (B10), Eq. (B9) becomes

$$I = 2J_0(\delta) + i\pi J_1(\delta) - 4\sum_{j=1}^{\infty}\frac{J_{2j}(\delta)}{(2j)^2-1}. \tag{B11}$$

If a quantity $S(\delta)$ is defined by

$$S(\delta) \equiv \sum_{j=1}^{\infty}\frac{J_{2j}(\delta)}{(2j)^2-1}, \qquad (j = 1, 2, 3, \ldots) \tag{B12}$$

then Eq. (B11) becomes

$$I = 2J_0(\delta) + i\pi J_1(\delta) - 4S(\delta). \tag{B13}$$

Therefore, the final expression for the required integral becomes

$$\int_{-\pi/2}^{\pi/2}[\exp(2ik\ell\cos\Omega)]\cos\Omega\,d\Omega = 2J_0(2k\ell) + i\pi J_1(2k\ell) - 4S(2k\ell). \tag{B14}$$

Appendix C
DEFINITIONS OF SYMBOLS USED IN THIS REPORT

English Small Letters

da, Δa	Respectively, the infinitesimal elemental area and the analogous finite-sized elemental area on the reflector surface.
da', $\Delta a'$	Respectively, the projections of da and Δa onto the normal plane.
$\Delta a_p'$	Projected elemental area of the *pth* reflector subdivision.
b_1	Distance from the center of a hyperbola to its vertex (or the length of its semi-transverse axis).
b_3	Distance from the center of a hyperbola to its focus.
b_2	$\equiv \sqrt{b_3^2 - b_1^2}$, the length of the semiconjugate axis of a hyperbola.
c	Speed of a spherically diverging acoustic wave from a point source.
d	Distance from the focus to an arbitrary point P on a conic section.
g	Maximum cross-sectional diameter of a limited circular paraboloid.
h	Distance from the directrix to an arbitrary point P on a conic section.
i	One of the two imaginary square roots of -1.
j	Index of an ordinary Bessel function ($j = 0, \pm 1, \pm 2, \pm 3, \ldots$).
k	Wave number ($k \equiv 2\pi/\lambda$).
ℓ	Length of that part of the monostatic axis occupied by the insonified portion of the reflector.
ℓ'	Distance between the normal plane and a parallel plane displaced along the monostatic axis.
ℓ_1, ℓ_2, ℓ_3	Lengths of the principal axes of an ellipsoid in the X, Y, and Z directions, respectively.
$\Delta \ell$	Length of that part of the monostatic axis occupied by a single reflector subdivision.
m	A number $0 \leqslant m \leqslant 1$. The length ℓ is divided into two portions of lengths $m\ell$ and $(1 - m)\ell$ by the truncating plane.
n	An integer.
p	Ordinal number of an arbitrary subdivision of the reflector (p is an integer).
q	Distance from the directrix to the vertex of any conic section.
r	Radial distance from a point source to an arbitrary field point.
r_i	Distance between the source and the normal plane of a reflector (measured along the monostatic axis).
r_r	Distance between the receiver and the normal plane of a reflector (measured along the monostatic axis).
Δr	Distance of da or of Δa from the normal plane (measured perpendicular to the normal plane).
s	Semi-interfocal distance of an ellipse.
t	Time.
v_n, v_μ, v_p	Respectively, the first, last, and general term in a geometric series.
w_1, w_2	Respectively, the height and the width of a plane rectangular reflector.
x, y, z	Cartesian coordinates of an arbitrary point in the XYZ coordinate system.
x_p, y_p, z_p	Cartesian coordinates of a point in the XYZ coordinate system with reference to the *pth* sectioning plane.

English Capital Letters

A	Amplitude of the incident spherical wave at a unit distance from the source.
A_p	Area of the reflector's cross section defined by the *pth* sectioning plane.
B	Parameter characterizing the incident acoustic wave in the vicinity of the reflector $[B \equiv (A/r_i)\exp(ikct)]$.
C	Coefficient which can be used to express $\lvert\varphi_r\rvert$ for certain reflectors.
C_p	Parameter used to describe the *pth* cross-sectional area of the solid defined by a general quadric surface.
D	Subdivision density: the number of subdivisions of the object per insonifying wavelength.
I	The integral $\int_{-\pi/2}^{\pi/2} [\exp(2ik\ell\cos\Omega)]\cos\Omega\, d\Omega$.
$J_j(x)$	Ordinary Bessel function in x of integral order j.
K	Constant used in describing a paraboloid.
L	Length of a right-circular cylinder.
R	Common ratio of successive terms in a geometric series.
$S(x)$	$\equiv \sum_{j=1}^{\infty} \frac{J_{2j}(x)}{(2j)^2 - 1}$.
X,Y,Z	Designations of the three axes of a Cartesian coordinate system.

Greek Small Letters

α,α'	$\equiv \exp(-ikr_i)$ and $\equiv \exp(-ikr_r)$, respectively.
β	A parameter $(\beta \equiv -2ik\ell/\mu)$.
γ	Ordinal number of the reflector subdivision through which the truncating plane passes.
δ	A parameter $(\delta \equiv 2k\ell)$.
ϵ	Eccentricity of a conic section.
ζ	A number $0 \leq \zeta \leq 1$: The reflector subdivision through which the truncating plane passes is divided into two portions of lengths $\zeta\ell/\mu$ and $(1-\zeta)\ell/\mu$ by the truncating plane.
θ	Angle between the outward-pointing normal to an elemental area da and that wave normal of the insonifying wave which passes through da.
λ	Wavelength of the insonifying acoustic wave.
μ	Number of subdivisions into which the length ℓ is divided.
$\dot{\xi}_i$	Acoustic particle velocity in the insonifying wave.
σ	Fineness ratio of the elliptically shaped cross section of a quadric-surface reflector. It is the ratio of the lengths of the principal axes of the cross section that lie in the Y and Z directions, respectively.
τ	Distance from the directrix to the focus of any conic section.
φ_i	Velocity potential in the insonifying spherical wave.
φ_r	Velocity potential reflected from an object, as given by the reflection integral [Eq. (3)].
$\varphi_r(\mu)$	Velocity potential reflected from an object, as given by the reflection summation formula [Eq. (4)].
$\lvert\varphi_0\rvert$, $\lvert\varphi_0(\mu)\rvert$	Respectively, the normalized forms of $\lvert\varphi_r\rvert$ and $\lvert\varphi_r(\mu)\rvert$ that are obtained by dividing each of these quantities by $(\lvert B\rvert\ell)/(2r_r)$.
ψ	Semiapex angle of a cone. Also, $\tan\psi$ is the slope of the asymptote of a hyperbola.

Greek Capital Letters

Θ	Angle at which the rectangular-plane reflector is tilted.
$\Lambda(\mu)$	The sum: $\sum_{p=1}^{\mu} p\, e^{\beta p}$.
Ω	Angular variable.
Ω'	$\equiv \pi/2 - \Omega$.

Security Classification

DOCUMENT CONTROL DATA - R&D

(Security classification of title, body of abstract and indexing annotation must be entered when the overall report is classified)

1. ORIGINATING ACTIVITY *(Corporate author)* U.S. Naval Research Laboratory Washington, D.C. 20390	2a. REPORT SECURITY CLASSIFICATION Unclassified 2b. GROUP

3. REPORT TITLE
Calculation of the Monostatically Reflected Velocity Potential in the Far Field of Certain Finite Rigid Bodies

4. DESCRIPTIVE NOTES *(Type of report and inclusive dates)*
An Interim report on one phase of the problem.

5. AUTHOR(S) *(Last name, first name, initial)*
Rudgers, A. J.

6. REPORT DATE December 3, 1965	7a. TOTAL NO. OF PAGES 36	7b. NO. OF REFS 5

8a. CONTRACT OR GRANT NO. NRL Problem S01-04 b. PROJECT NO. RF 101-03-45-5252 c. d.	9a. ORIGINATOR'S REPORT NUMBER(S) NRL Report 6285 9b. OTHER REPORT NO(S) *(Any other numbers that may be assigned this report)* None

10. AVAILABILITY/LIMITATION NOTICES
Unlimited availability. Copies available from Clearinghouse for Federal Scientific and Technical Information (CFSTI), Sills Building, 5285 Port Royal Road, Springfield, Virginia 22151.

11. SUPPLEMENTARY NOTES	12. SPONSORING MILITARY ACTIVITY Dept. of the Navy (Office of Naval Research)

13. ABSTRACT

An existing theory of acoustic reflection, applicable in the far field and embodying the Kirchhoff approximation, is used to calculate the velocity potential of the acoustic wave monostatically reflected from certain rigid bodies. Where possible, a reflection summation formula is applied in these calculations that is written in terms of a few simple geometrical parameters of the reflecting body. The limiting forms of the summation-formula results are found. These forms are identical to results which can be derived according to a well-known reflection integral. A comparison of the approximation of the reflection summation formula to the reflection integral is discussed for certain bodies. General formulae are derived which may be applied to any reflecting object whose surface can be generated by a conic section, or to segments and frustums of such objects. A limitation of calculation schemes based on the summation formula is discussed and illustrated by calculating the velocity potential of the wave reflected from a short, rigid, right-circular cylinder according to the reflection integral. Results of the calculations are discussed in terms of the geometrical parameters employed in the reflection summation formula.

DD FORM 1 JAN 64 1473

Security Classification

Security Classification

14. KEY WORDS	LINK A ROLE	LINK A WT	LINK B ROLE	LINK B WT	LINK C ROLE	LINK C WT
Acoustic Properties						
Reflection						
(Velocity Potential)						
Conical Bodies						
Cylindrical Bodies						
(Quadric Surfaces)						
Mathematical Models						
Integral Equations						
(Series Summation)						
(Kirchhoff Approximation)						
Bodies of Revolution						

INSTRUCTIONS

1. ORIGINATING ACTIVITY: Enter the name and address of the contractor, subcontractor, grantee, Department of Defense activity or other organization *(corporate author)* issuing the report.

2a. REPORT SECURITY CLASSIFICATION: Enter the overall security classification of the report. Indicate whether "Restricted Data" is included. Marking is to be in accordance with appropriate security regulations.

2b. GROUP: Automatic downgrading is specified in DoD Directive 5200.10 and Armed Forces Industrial Manual. Enter the group number. Also, when applicable, show that optional markings have been used for Group 3 and Group 4 as authorized.

3. REPORT TITLE: Enter the complete report title in all capital letters. Titles in all cases should be unclassified. If a meaningful title cannot be selected without classification, show title classification in all capitals in parenthesis immediately following the title.

4. DESCRIPTIVE NOTES: If appropriate, enter the type of report, e.g., interim, progress, summary, annual, or final. Give the inclusive dates when a specific reporting period is covered.

5. AUTHOR(S): Enter the name(s) of author(s) as shown on or in the report. Enter last name, first name, middle initial. If military, show rank and branch of service. The name of the principal author is an absolute minimum requirement.

6. REPORT DATE: Enter the date of the report as day, month, year; or month, year. If more than one date appears on the report, use date of publication.

7a. TOTAL NUMBER OF PAGES: The total page count should follow normal pagination procedures, i.e., enter the number of pages containing information.

7b. NUMBER OF REFERENCES: Enter the total number of references cited in the report.

8a. CONTRACT OR GRANT NUMBER: If appropriate, enter the applicable number of the contract or grant under which the report was written.

8b, 8c, & 8d. PROJECT NUMBER: Enter the appropriate military department identification, such as project number, subproject number, system numbers, task number, etc.

9a. ORIGINATOR'S REPORT NUMBER(S): Enter the official report number by which the document will be identified and controlled by the originating activity. This number must be unique to this report.

9b. OTHER REPORT NUMBER(S): If the report has been assigned any other report numbers *(either by the originator or by the sponsor)*, also enter this number(s).

10. AVAILABILITY/LIMITATION NOTICES: Enter any limitations on further dissemination of the report, other than those imposed by security classification, using standard statements such as:

(1) "Qualified requesters may obtain copies of this report from DDC."

(2) "Foreign announcement and dissemination of this report by DDC is not authorized."

(3) "U. S. Government agencies may obtain copies of this report directly from DDC. Other qualified DDC users shall request through _____."

(4) "U. S. military agencies may obtain copies of this report directly from DDC. Other qualified users shall request through _____."

(5) "All distribution of this report is controlled. Qualified DDC users shall request through _____."

If the report has been furnished to the Office of Technical Services, Department of Commerce, for sale to the public, indicate this fact and enter the price, if known.

11. SUPPLEMENTARY NOTES: Use for additional explanatory notes.

12. SPONSORING MILITARY ACTIVITY: Enter the name of the departmental project office or laboratory sponsoring *(paying for)* the research and development. Include address.

13. ABSTRACT: Enter an abstract giving a brief and factual summary of the document indicative of the report, even though it may also appear elsewhere in the body of the technical report. If additional space is required, a continuation sheet shall be attached.

It is highly desirable that the abstract of classified reports be unclassified. Each paragraph of the abstract shall end with an indication of the military security classification of the information in the paragraph, represented as *(TS)*, *(S)*, *(C)*, or *(U)*.

There is no limitation on the length of the abstract. However, the suggested length is from 150 to 225 words.

14. KEY WORDS: Key words are technically meaningful terms or short phrases that characterize a report and may be used as index entries for cataloging the report. Key words must be selected so that no security classification is required. Identifiers, such as equipment model designation, trade name, military project code name, geographic location, may be used as key words but will be followed by an indication of technical context. The assignment of links, roles, and weights is optional.