NRL Report 6219

Operation and Performance of the NRL Satellite Position Display

H. G. TALMADGE, JR. AND R. J. ORSINO

Data Processing Branch
Applications Research Division

August 11, 1965

APPROVED FOR PUBLIC RELEASE - DISTRIBUTION UNLIMITED

U.S. NAVAL RESEARCH LABORATORY
Washington, D.C.

CONTENTS

Abstract	ii
Problem Status	ii
Authorization	ii
INTRODUCTION	1
PHYSICAL DESCRIPTION OF SPAD	1
Display Console	2
Display Formatter	2
Tabular Readout	3
Electric Typewriter	3
Controller	3
Eldiscon	3
Prediction Computer	3
SPAD OPERATION	3
Loading the Computer	5
Computer Control Panel	5
Operator's Sequence	8
PHILOSOPHY OF DESIGN	16
Basic Features of SPAD	16
Selection of Computer	17
Selection of Display	17
Map Overlay	17
COMPUTER PROGRAMMING	17
Memory Utilization	18
Updating the Orbital Element Store	18
Executive Routines and SPAD Circuit Design	18
Arithmetic Routines	18
Perturbation of Mean Anomaly	19
SPAD INSTRUCTION MANUAL	19
PRELIMINARY PERFORMANCE DATA	20
Satellite Capacity in Store	20
Position Prediction Error	20
Orbit and Tabular Readout Delays	20
EVALUATION PLANS FOR SPAD	20
CONCLUSIONS	21
ACKNOWLEDGMENTS	22
REFERENCES	22
APPENDIX - List of Controls on Computer Control Panel	23

ABSTRACT

Nearing completion at NRL is an experimental Satellite Position Prediction and Display equipment (SPAD) for shipboard use. SPAD will store orbital elements and related information of 88 satellites in a digital computer, which then will predict and display positions and other information on up to eleven satellites. Position and height information is updated on the 19-in. geographic display each 1.1 sec. The prediction time can be varied forwards or backwards to permit a rapid determination of where and when different configurations of satellite orbits, for instance, satellite grouping, will occur. An orbit with a granularity of four degrees in both latitude and longitude can be computed in just five seconds. The operational program, prepared for the AN/UYK-1 digital computer, takes into account the variation of anomalistic periods of irregular satellites. Thus, positions of decaying satellites have been printed on the tabular readout with position errors of as much as 0.2 deg in latitude or longitude at nine days from epoch. A surveillance circle up to 504 naut mi in radius for one selected satellite can be painted on the expanded display. Course, speed, and position of own ship are displayed at all times.

A preliminary instruction manual is being prepared as design, construction, and technical evaluation of circuits proceed. An outline of the proposed operational evaluation has been prepared. The utility of SPAD in providing rapid, flexible, on-the-spot predictions of satellite activities will be studied during an evaluation of SPAD planned to be completed in the fall of 1965.

PROBLEM STATUS

This is an interim report; work on the problem is continuing.

AUTHORIZATION

NRL Problems Y01-01 and Y01-02
Projects SF 019-01-03, Task 6168
and RF 007-01-41-4450

Manuscript submitted November 17, 1964.

OPERATION AND PERFORMANCE OF THE NRL SATELLITE POSITION DISPLAY

INTRODUCTION

The U.S. Naval Research Laboratory is currently developing an experimental Satellite Position Prediction and Display equipment (SPAD) for shipboard use. SPAD will permit an operator to select satellites either individually or according to category and view the predicted positions against a map background, together with height, vector, orbit, and surveillance-circle information. Additional information on a single satellite will be viewed on a separate tabular display.

As a research tool, SPAD will furnish the Navy with rapid, flexible, on-the-spot predictions of satellite activities. Operational requirements for such an equipment will be studied during an evaluation now being planned.

The status of SPAD development will be described in terms of (a) appearance of the hardware, (b) manner of its operation, (c) philosophy of design, (d) computer programming, (e) instruction manual, (f) preliminary performance data, and (g) evaluation plans. Detailed descriptions of SPAD design will be presented in subsequent reports.

SPAD is being developed with Bureau of Ships support as the result of an NRL proposal (1). To meet the modest accuracy requirement (60 naut mi error in predicted position), simplified orbit equations (2) were derived. These equations were to be implemented using a hybrid computer (3). When it appeared that SPAD could be evaluated on a satellite-communication ship, using on a time-shared basis the shipboard digital computer, the hopefully simplified hybrid-computer approach was dropped in favor of the use of an all-digital computer. However, an initial evaluation will be conducted at NRL, since a suitable ship will not be available for this purpose. The display formatter and display console remain essentially as described in Ref. 4. These have been further described in a recent paper (5). Since then, SPAD components have been assembled and tested, and considerably more detailed information can now be given regarding manipulation of the control panel. It must be emphasized, however, that for the initial version of SPAD the objective is to investigate a concept and not to develop an equipment.

PHYSICAL DESCRIPTION OF SPAD

As presently assembled, the NRL satellite display appears as shown in Fig. 1. Before an operational evaluation of the equipment can begin, it will be necessary to add certain circuits to both the formatter and the display console, to finish debugging the computer program, and to refine plans for the operational evaluation.

As a research tool, the equipment in Fig. 1 is believed to be adequate for evaluation of the SPAD concept. Various practical limitations, as well as the need to provide ready access for test and capability for convenient design change, led to the equipment configuration adopted for the research version of SPAD. Another version, designed to firm specifications for operational use, may be expected to have a different appearance and involve less size, weight, and electrical power.

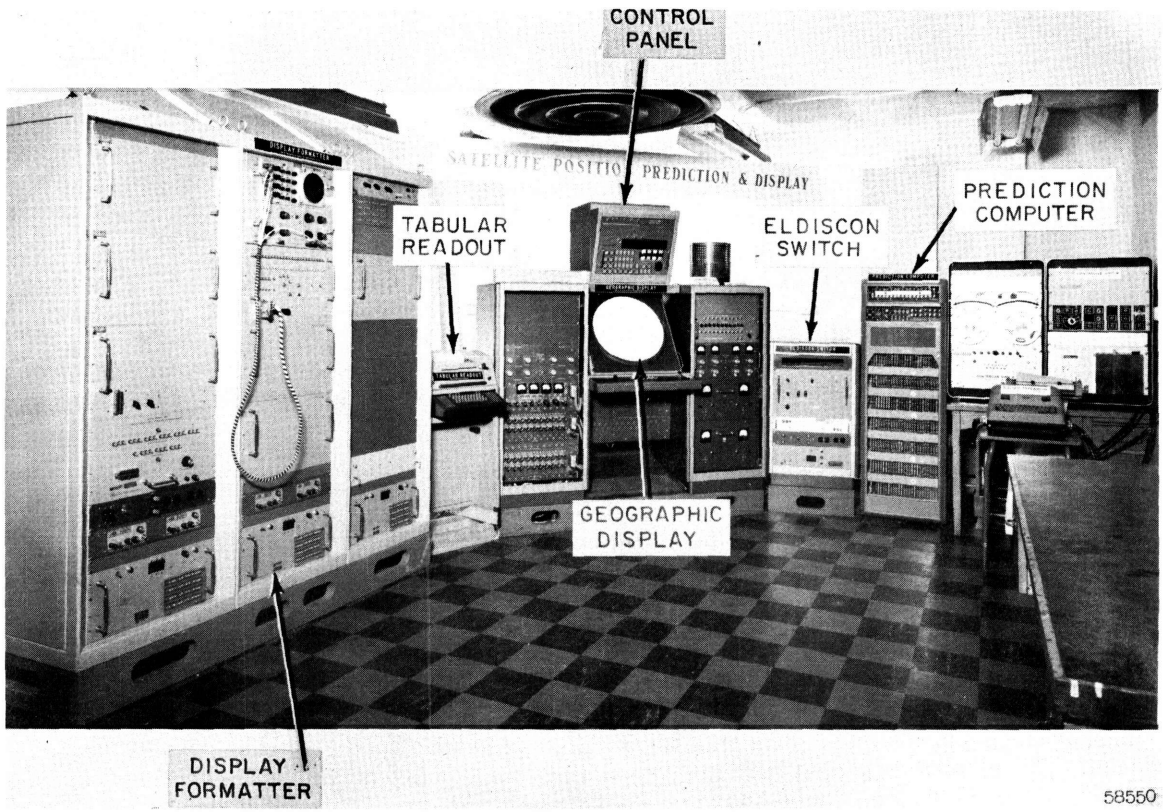

Fig. 1 - SPAD equipment as partially assembled

Display Console

Predicted positions of selected satellites appear on the 19-in. cathode-ray tube of the display console (Fig. 1). These satellites as well as display mode and prediction time are selected at the computer control panel.

Because of its ready availability, an existing experimental display console was selected for SPAD use. Circuits were then modified to permit multiple video inputs and both raster and symbol writing in a display-frame period. When it appeared that a shipboard evaluation would be possible, extensive mechanical changes were made in view of the rigorous shipboard environment. Because of human-engineering considerations, the computer control panel was placed in an add-on cabinet located above the picture tube. Not shown in Fig. 1 are the digital circuits (and their associated power supplies) added within the side cabinets to provide interfacing between control panel and computer.

Display Formatter

All information appearing on the geographic display comes from the display formatter, the three-bay assembly to the left of the display console. Within the formatter, information is received from the prediction computer, stored, and suitably assembled for display at about 30 frames per second. To facilitate the technical evaluation, a four-channel rack-mounted oscilloscope is connected to each circuit drawer in turn, and test points are then rapidly chosen by means of selector switches.

With the exception of raster sweep generators and surveillance-circle circuits, which employ analog-computer techniques, all information-storage and assembly circuits in the formatter employ digital logic modules. These are mounted in pull-out circuit drawers with integral cooling fans.

Tabular Readout

Additional information on one selected satellite is presented on a tabular readout display. The page printer, located to the left of the main display console, serves as a tabular readout in the initial version of SPAD. Details of the two-line readout are presented later in this report. This readout information reaches the page printer via the two-piece computer controller shown in the far right of Fig. 1.

Electric Typewriter

The electric typewriter, shown in front of the controller (Fig. 1), which is electrically connected to the controller (Fig. 2), is not properly a part of the SPAD system but is used in preparing the computer program. Once the program is completed, the typewriter has no further use.

Controller

In addition to connecting the computer to either the page printer or the electric typewriter, the controller with its built-in tape reader is used to load the adjacent prediction computer (Figs. 1, 2) with both the computer program and the regularly updated list of satellites, with their orbital elements and related data.

Eldiscon

Between the computer and the display console is the eldiscon, an electronic disconnect switch used to permit time-sharing of the computer between SPAD and some other user. The eldiscon (Figs. 1, 2) is essentially a multipole, double-throw switch connected to certain input and output cables of the computer.

Prediction Computer

The computer shown in Fig. 1 is the TRW-230, manufactured by the Bunker-Ramo Corp., formerly the TRW Computer Division. This is a commercial version of the militarized AN/UYK-1 digital computer used for satellite predictions on the USNS KINGSPORT (AG-164), a satellite-communication ship. The KINGSPORT was the ship considered as a test site for SPAD, with this computer being reloaded and switched between users. While current KINGSPORT commitments would seem to rule out a shipboard evaluation, SPAD continues to be fabricated to allow for this contingency.

SPAD OPERATION

The manner in which SPAD is operated will now be described. However, little attention will be given to theory of the circuits behind these operations, and it will be assumed that the equipment has been properly calibrated and placed in readiness. For the moment

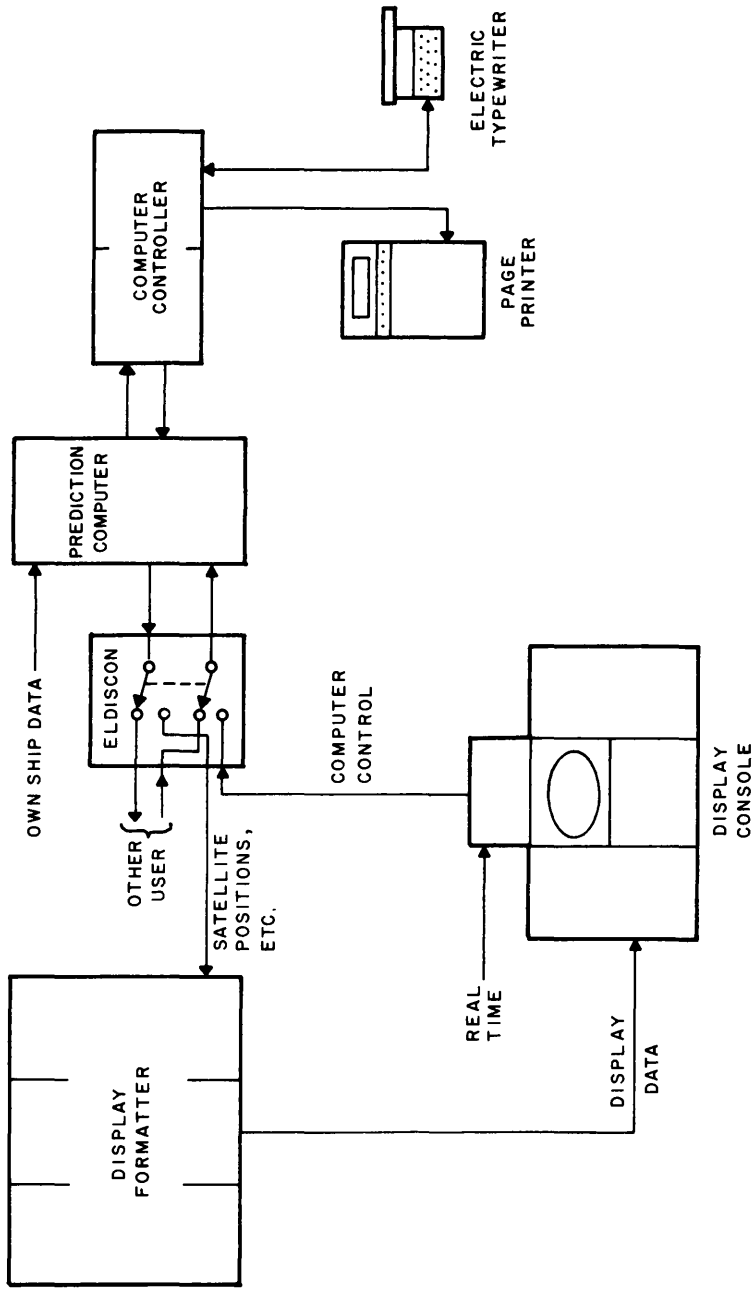

Fig. 2 - Information flow block diagram

it will be assumed that the AN/UYK-1 computer, with its memory too small to serve two functions, must first be switched over to the SPAD function and loaded with SPAD program and data. This process is called manual time sharing; the electronic time-sharing feature for which the eldiscon was designed will be described later.

Loading the Computer

With SPAD equipment turned on, the manual-control switch at the eldiscon is changed from NAST to SPAD position. (The term NAST stands for Naval Advent Shipboard Terminal, and was selected for the KINGSPORT installation.) The SPAD program tape is then read into the computer via the tape reader on the controller. The remaining computer memory locations will then be filled with satellite data, with locations for individual satellites being denoted by track numbers 00 through 99. However, the program now leaves room for only about 88 satellites.

The data tape contains orbital elements and related information to be received by radio teletype and updated perhaps weekly by a space-surveillance station. The need for this data tape is described in general terms in an NRL memorandum (6), with detailed requirements being spelled out in another NRL memorandum (7). As pointed out in Ref. 7, the station at Dahlgren does not now generate data in the SPAD format, and hence some data processing is necessary at the user point. Presumably this processing could be performed by the SPAD computer if an auxiliary program were written for this purpose. The question is under investigation.

Computer Control Panel

At the heart of SPAD is the computer control panel (Fig. 3a), since much of SPAD performance can be described in terms of how this panel functions. The overall capabilities of the panel, shown for greater clarity in Fig. 3b, are first summarized. The panel will then be further described in terms of how the operator will manipulate the various controls. A discussion of the functions of individual controls is deferred until the Appendix.

At the computer control panel, the operator selects desired satellites for viewing, designating them by either category or track number, the latter being an arbitrary number corresponding to a memory address. He also selects either clock time or manual time, and advances the latter forwards and backwards at a variable rate. Actual prediction time from 1960 through 1975 is always indicated by panel lamps. The operator can vary the map scale to select either a world map or an expanded presentation, with the expanded display being off-centered about either own ship or a selected satellite. At his discretion, the operator can request for this satellite an orbit centered on the designated time, or he can study trends of a group of satellites by selecting a nonprecision prediction mode and then manually varying time at an accelerated rate up to 3600 times normal. This mode provides a rapid answer to the question of when a satellite will be in the vicinity of, say, own ship. Also, the times and places in which up to 11 satellites will bunch can be readily determined.

Since the operator cannot be expected to remember how many satellites there are in each category each time the store is updated, he may implicitly select with his category buttons more satellites than the ten category stores can handle. Beginning with the category of highest priority, the computer will search its memory and predict positions until these ten stores are full, and then light certain lamps in the 16 category-selection buttons to indicate that while these categories have been selected, some or all of the satellites in these categories have not been shown. While the geographic display remains in the world-map mode, the computer will continue to update predicted positions for these first ten.

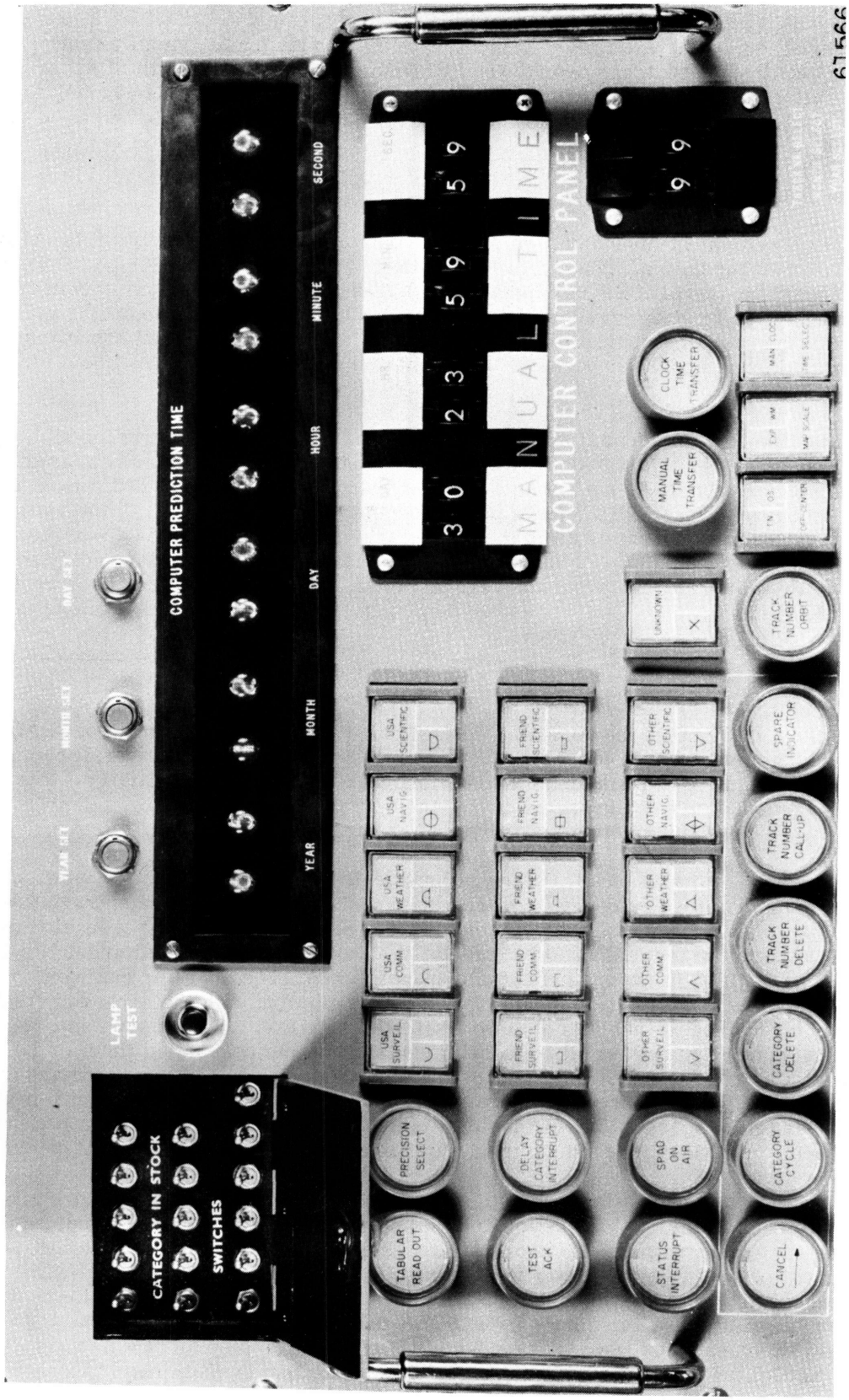

Fig. 3a - Computer control panel photograph

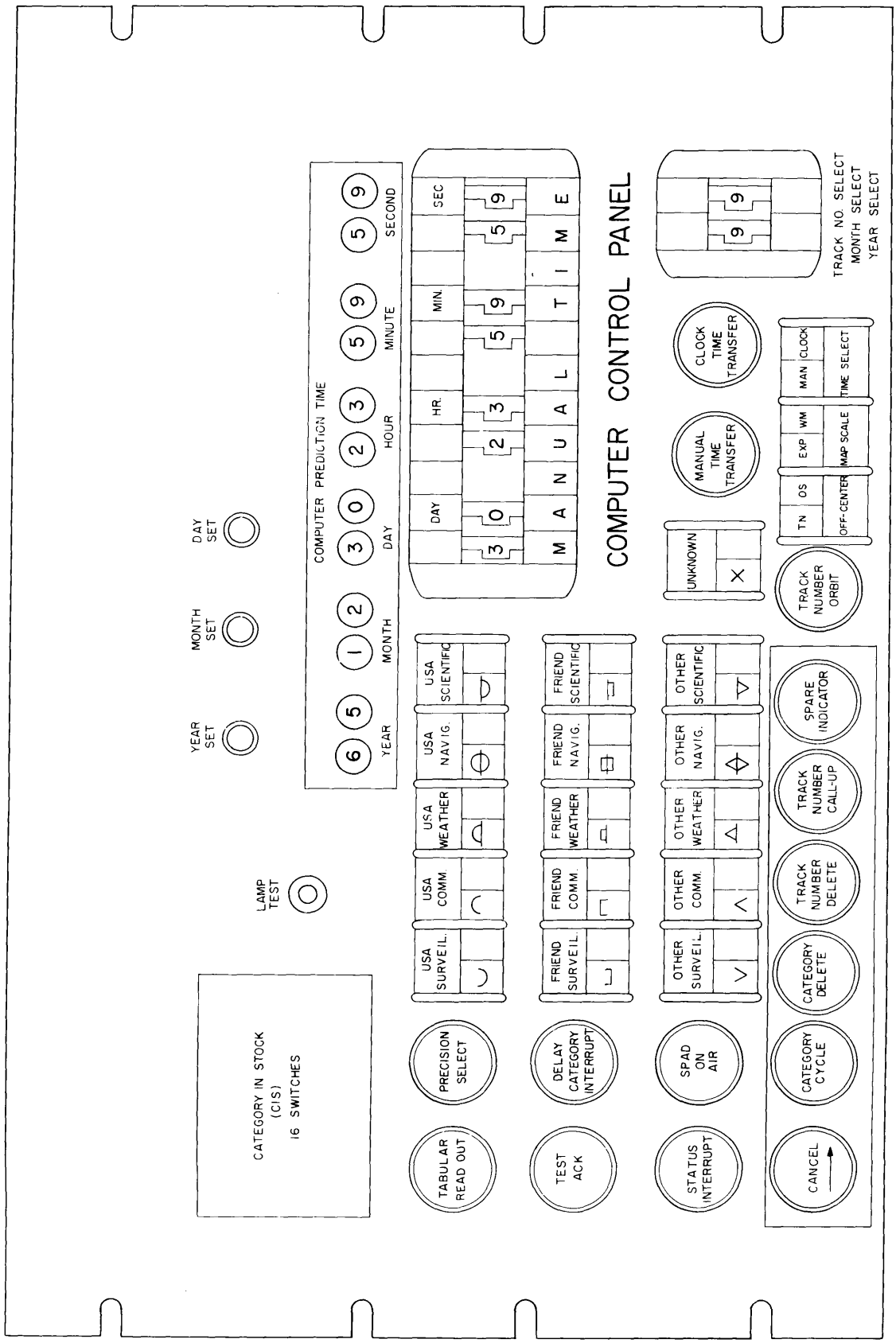

Fig. 3b - Computer control panel sketch

At his discretion, the operator can push the Category Cycle button to cause the computer to proceed to the next ten satellites, still following the priority sequence. Any satellite known to be in one of the ten category-position stores for viewing on the world-map display can be replaced by any other satellite selected, according to its track number. This feature is in addition to the selection by track number of any satellite for viewing with velocity vector on an expanded display, or for viewing with orbit on the world-map display.

Operator's Sequence

It is anticipated that the operator will manipulate switches on the computer control panel in the following sequence. First, he will push the Time Select button as necessary to light the Clock lamp, indicating that the computer will predict according to real time. Since the USNS KINGSPORT (for which SPAD was designed) generates time in seconds, minutes, and hours, but not in higher-order units, the operator must generate higher units manually. With Manual Time day dials set by hand to the correct day of the month, the operator pushes the Day Set button to set a day counter to the correct value. This counter is then automatically advanced each 24 hours and must be reset each month. To simplify circuit design, no month or year counters are provided, and the operator must send this information to the computer as follows. With the Track No. Select/Month Select/Year Select dials set to the current month (01 through 12), the operator punches the Month Set button. With the same dials set to the current year (60 through 75 for years 1960 through 1975), the operator punches the Year Set button.

Real time (here called "clock" time) is now offered to the computer once each second. As clock time (alternatively, manual time as described later) is accepted by the computer, times for which the computer thereafter predicts are displayed by the 12 indicators as Computer Prediction Time. Predictions for each selected satellite up to as many as 11 will now be updated approximately once each second. The procedure for selecting these satellites will now be described.

All satellites are placed in 16 categories, as shown in Table 1. Except for any "unknown" satellites which may lack identification, satellites are arranged in a matrix according to five functions and three countries of origin. Each category-selection button has four lamps, arranged as shown in Fig. 4, with the green lamp coming on when the corresponding Category in Stock switch has been set to indicate that the computer now stores orbital elements for one or more satellites of this category. For purposes of illustration, consider the situation in Table 2, with 80 satellites assumed to be distributed among 15 categories, as shown. Thus, the G or green lamp is not lit for one category, U.S.A. Scientific.* Four categories, Unknown, Other Surveillance, U.S.A. Communication, and Other Scientific, have been selected by pushing the respective buttons, thus lighting the B or blue lamps for those categories. During this selection process, the Delay Category Interrupt button is held depressed until all desired selections have been made or corrected. The state of the 16 blue lamps is transmitted to the prediction computer only upon release of the Delay Category Interrupt button. While it is evident from Table 2 that these four categories contain a total of 25 satellites in this assumed situation, the operator will not immediately know how many satellites he has implicitly selected.

The computer then searches its memory for satellites within these categories, beginning with the highest-priority category, Unknown. This priority order is given in Table 2.

* One may suppose that U.S.A. Scientific satellites are presently of no interest to this ship, and hence were omitted from the weekly message for updating the orbital elements store.

Table 1
Categorization of Satellites

Countries of Origin	Functions				
	Scientific	Surveill.	Weather	Communic.	Navigation
U.S.A.					
Friendly					
Other					

Unknown **X**

COLOR KEY:

G	*Green*	*Satellites of this category are stored in the computer.*
B	*Blue*	*This category has been selected for viewing.*
R	*Red*	*No satellites in this category have appeared since selection.*
Y	*Yellow*	*Some satellites in this category have not yet appeared since selection.*

NOTE:

There are three compartments in each category switch. Y color is predominant and 'washes' out G color. See text for further discussion of color coding.

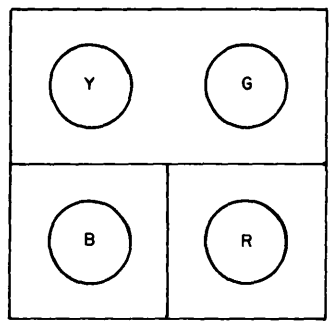

Fig. 4 - Lamp arrangement in category switches

Since the SPAD formatter is wired for only ten category stores, the computer can predict for only nine of the 13 satellites in the next selected category in the priority list. Thus, the Y or yellow lamp comes on in the Other Surveillance button to indicate that while certain satellites within this category have not been displayed, the computer will begin with this category when the category search is next cycled. Red lamps will be lit in the buttons corresponding to the remaining two categories of the initial selection, to indicate that no satellites in the U.S.A. Communication and Other Scientific categories have yet been displayed. The Selection column of Table 2 shows what lamps are lit following the initial selection, and also how many satellites in each category have had predictions performed. Since red lamps are lit, the sum is ten.

When the operator has studied the first ten satellites appearing on his world-map display, shown in Fig. 5 (which for simplicity contains only one satellite and own ship), he then pushes the Category Cycle button to direct the computer to proceed to the next satellites in the priority list. As indicated in the "Cycle 1" column of Table 2, the computer began by searching its memory for satellites in the Other Surveillance category and picked up the remaining four. Thus, the Y lamp went out for this button. The computer then began searching for U.S.A. Communication satellites, the next-selected category in the priority list. Since the ten category position stores are filled by the first six

Table 2
Category Selection Lamps for an Assumed Situation

Category Priority List	Quantity in Stock	Lamps Lit and Stores Used					
		Selection		Cycle 1		Cycle 2	
Unknown	1	GB	1	GB		GB	
Other Surveillance	13	YGB	9	GB	4	GB	
Other Communication	6	G		G		G	
Friendly Surveillance	6	G		G		G	
Friendly Communication	11	G		G		G	
U.S.A. Surveillance	9	G		G		G	
U.S.A. Communication	9	GBR		YGB	6	GB	3
Other Weather	2	G		G		G	
Other Navigation	2	G		G		G	
Friendly Weather	4	G		G		G	
Friendly Navigation	3	G		G		G	
Friendly Scientific	7	G		G		G	
U.S.A. Weather	3	G		G		G	
U.S.A. Navigation	2	G		G		G	
U.S.A. Scientific	0						
Other Scientific	2	GBR		GBR		GB	2
Totals	80		10		10		5

COLOR KEY:

G	Green	Satellites of this category are stored in the computer.
B	Blue	This category has been selected for viewing.
R	Red	No satellites in this category have appeared since selection.
Y	Yellow	Some satellites in this category have not yet appeared since selection.

of these, the computer turns the R lamp off and the Y light on. Lamps for the other category-selection buttons remain unchanged. As before, the computer continues to update these ten satellites until the operator takes further action.

Since a Y lamp is lit, the operator knows that there are one or more satellites implicitly selected which have not yet appeared on the world-map display. To view these, he can repeatedly push the Category Cycle button until no Y or R lamps are lit. Thus, the second cycle operation will result in the situation depicted in the last column, denoted "Cycle 2," which shows that for the assumed situation only five satellites will be contained in the category stores. All Y and R lamps will be out. The 14 G lamps do not change, nor do the four B lamps denoting which categories have been selected from the 14 available.

When the operator made his original selection and saw the Y and R lamps come on to indicate an overloaded condition, he could have taken other remedial actions. He could have canceled his entire selection by pushing the Category Delete button and then started over with other choices, or he could have altered individual choices by pushing the individual category buttons. Then, too, individual satellites of no immediate interest can be deleted, one at a time, by noting their track number on the geographic display, dialing that number on the Track No. Select/Month Select/Year Select dials, and then pushing the Track Number Delete button. If any satellites were waiting to be displayed on the next Category Cycle operation, the first of these in line will replace the deleted track.

Still further versatility is provided by the Track Number Call-Up button, which permits the operator to select any satellite by its track number and to have predicted positions placed in one of the category stores. If there is a vacancy in one of the ten category stores, this satellite will then appear on the world-map display. Otherwise, a vacancy can be created by selecting some undesired satellite then appearing on the display and deleting it by means of the Track Number Delete button. The satellite previously selected using the Track Number Call-Up button will then appear.

The present operational program has been written such that when the Category Cycle button is pushed, if a store remains empty after the computer first updates those satellites chosen by category, a satellite chosen by the Track Number Call-Up request will be updated. On the other hand, when the Track Number Delete button is pushed, the computer first updates any satellite which may have been selected by the Track Number Call-Up request. If no satellite has been so selected, the next satellite in the category waiting list will be updated. When time permits, consideration will be given to revising the operational program so that any satellite called up by track number will be given priority over those selected by means of the category buttons.

Each of the ten category stores contains computer-generated information representing position, category symbol, track number, and satellite height. Three decimal numbers represent height in tens of miles above sea level up to a maximum indication of 9,990 naut mi. Higher objects will be represented by three 9's and the ambiguity will at present be tolerated. However, improved resolution to greater heights will be provided by the tabular readout, to be described later.

While these ten satellites are omitted from the world-map display (Fig. 5), the one satellite shown indicates that a position is presented graphically as a dot, with the remaining information appearing in symbolic form as alphanumerics. For one selected satellite the operator can also view either an orbit on the world-map display, or else a tail-dot velocity vector and surveillance circle on an expanded display, such as the rectangular expanded display (Fig. 6). To select this satellite, the operator first dials in the track number and then pushes the Track Number Orbit button. The computer then predicts for an eleventh satellite and places the information in what is called the track-number store (TN). If he wishes an expanded display, the operator also pushes the Map-Scale button to turn off the WM (world-map) lamp and turn on the EXP (expanded) lamp. The expanded display will be off-centered and expanded about either the TN satellite or own ship, denoted OS, depending upon whether the last push of the Off-Center button left the TN or the OS lamp lit. As a convenience to the operator, any push of the Off-Center button will change the operating mode from WM to EXP, if this change has not yet been effected.

Certain details of the expanded display can now be emphasized. In the initial version of SPAD, map detail will be omitted, and the edge-lighted optical map overlay of the world-map display will be turned off for an expanded display. The rectangular display is 20 degrees in latitude by 30 degrees in longitude, with the track about which expansion occurs falling within the central 10×20 degree area, so that the 5-degree periphery can assure appearance of the velocity-vector tail dot. Contents of the ten category stores do not appear on the expanded display. The vector tail dot is scaled to show where the satellite

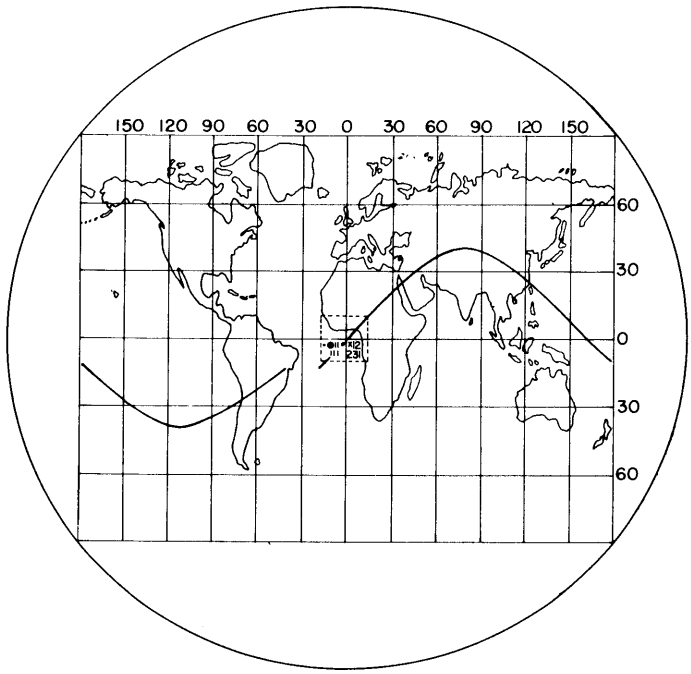

Fig. 5 - Appearance of world display

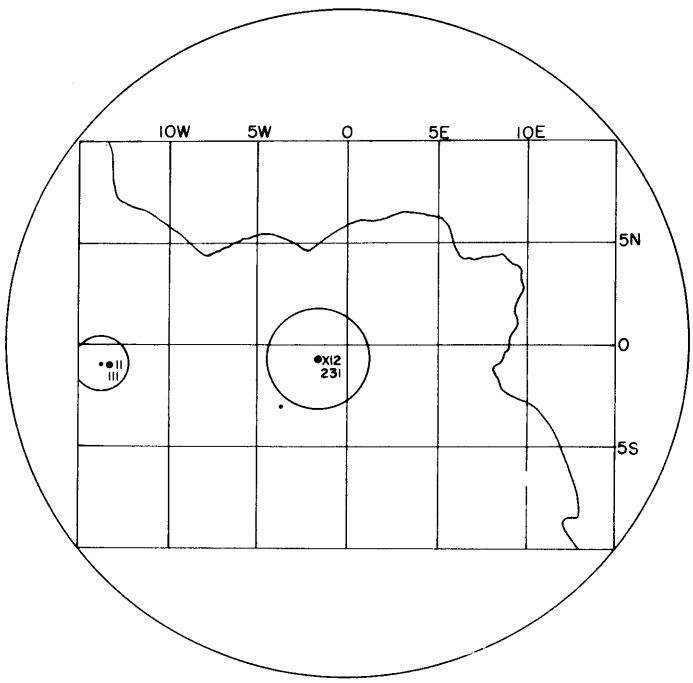

Fig. 6 - Expanded display

was one minute ago. While surveillance* circles are painted for both TN and OS, the vector tail dot is omitted for own ship. Instead, ship's speed is represented by two decimal digits following the circle-cross symbol, with three digits on the second line denoting ship's heading in degrees. Thus in Fig. 6, own ship is traveling at 11 knots at a course of 111 degrees.

As the satellite of track 12 proceeds in orbit, the position point in Fig. 6 moves in a northwest direction until it crosses the north boundary of the central 10 × 20 degree area. Immediately, display off-centering changes 10 degrees in latitude, so that the satellite now appears just above the south boundary of this area, and own ship's position will not appear at all. It appears that for this example the satellite will next cross the east boundary, with a resultant off-centering jump of 20 degrees in longitude. Should the TN satellite ever proceed within 15 degrees of either pole, the expanded display will then appear as the polar plot of Fig. 7, which shows only the grid lines and identifying numbers.

Additional information describing the selected track number appears automatically on the tabular readout (the model TT-47D/UG page printer of Fig. 1) when the Tabular Readout button is pushed. This message is described later, after additional features of the computer control panel are presented.

By pushing the Time Select button to turn on the MAN or manual-time lamp in this button, the operator can cause the computer to predict satellite positions at a manually controlled time. This time is generated in an up/down manual time counter for which the count state is sent to the computer four times each second. The initial state of this counter is set to either ship's true time (by a push of the Clock Time Transfer button) or to manual time as set up on the eight Manual Time dials (by a push of the Manual Time Transfer button). When desired, the state of this time counter will be held fixed at whatever state it has been either advanced to or set to, providing the Time Vernier control (Fig. 8) is set at the Stop position to inhibit further counting. Overall SPAD performance will be tested by predicting the position of a synthetic satellite, track number 00, at certain predetermined times, and comparing results with known values. The stop position facilitates this comparison.

As the Time Vernier control is advanced past the stop position, the state of the manual-time counter will at first be advanced exactly one count per second. However, the Time Vernier control can be used to change the state from one to 60 counts per second, either backwards or forwards, provided the Time Direction lever switch is held in either the BACK or FWD position. This manually varied rate can be multiplied 60 times by simultaneously holding the Time Speed lever switch in either fast position. Clock pulses at 1 to 60 cps now bypass the seconds stage of the up/down counter and are applied directly to the minutes stage.

From the foregoing description of manual-time operation, it is seen that positions of up to 11 satellites can be predicted and displayed at a manually controlled time which can be varied either forwards or backwards at an accelerated rate continuously variable from one up to 3600 times faster than normal, with manually controlled time being offered to the computer four times each second. Thus, the suborbital paths of a number of satellites can be rapidly traced out to determine approximately when satellite bunching will occur or, say, when a given satellite will approach a selected point. The stores are most frequently updated when the Precision Select button is pushed to select a nonprecision mode, as indicated by the Nonprecision lamp on the front porch (Fig. 8). Thus, the approximate time is rapidly made available. The operator will then push the button again to extinguish the Nonprecision lamp and will also slow down the time counter while varying the reading forward and backward until a precise time answer is available.

---

* The significance of surveillance circles is discussed later.

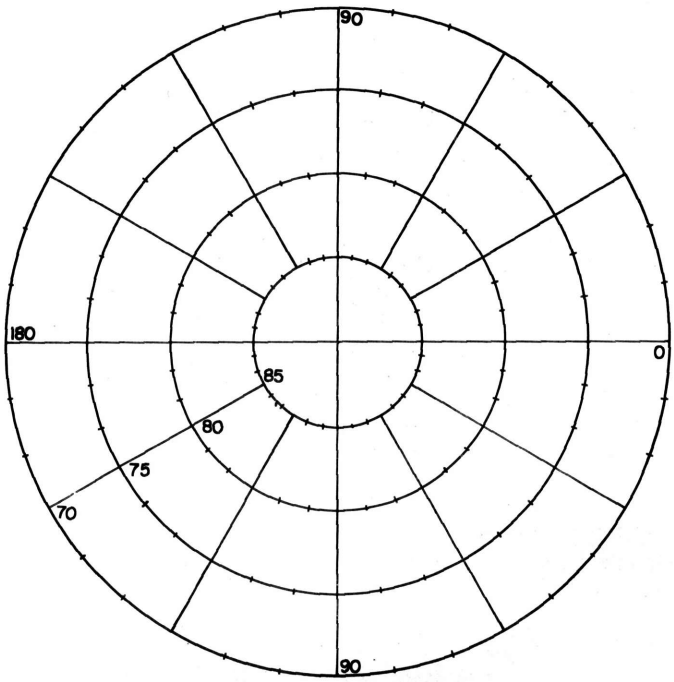

Fig. 7 - Map grid for polar display

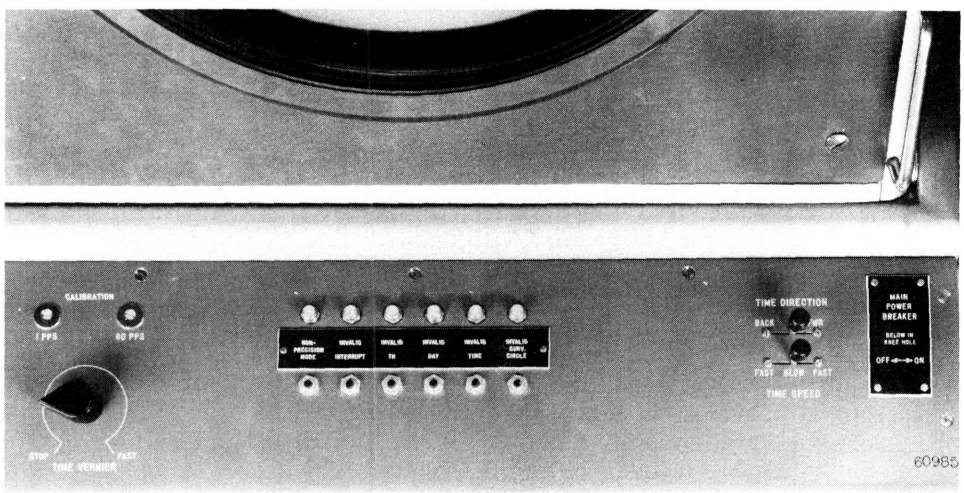

Fig. 8 - Front porcn

The remaining five lamps on the front porch are known as "tilt" lamps, since they indicate some error in SPAD operation. Suitable computer output words can turn a lamp on to indicate trouble and can turn it off to indicate that the condition no longer exists. The Invalid Interrupt lamp turns on to indicate that the computer has received an interrupt signal not part of SPAD operation, which acts to suspend further computer function. To turn off the Invalid Interrupt lamp and thus cause the computer to resume operation, the operator can, among other actions, redesignate either the month or the year. thus generating a valid interrupt.

Since the number of satellites of interest to a ship at sea may vary from week to week, some of the store locations may be empty. Should the operator dial in an invalid track number, thus selecting an empty store, the computer will turn on the Invalid Track No. lamp and then suspend further operation. In this event the operator must select a satellite from one of the valid locations, so that the computer can turn off the lamp and resume normal operation.

In like manner, the Invalid Day lamp will come on to indicate that the computer has received a day count of zero or else a value greater than 31. These are invalid numbers, since the day count is interpreted as the day of the month, with valid numbers being 01 through 31. The computer would interpret September 31 as October 01.

While the computer is not programmed to differentiate between clock time and manual time, the operator must note which time is being sent when he sees the Invalid Day lamp come on. If clock time is being sent, he must reset the day counter, using the Day Set button. If manual time is being sent, he must set up a valid day on the Day dials and push the Manual Time Transfer button.

A circuit interlock makes it impossible to set the Hours stages of the up/down counter to a value higher than 23 hours. Other circuit interlocks make it impossible to advance the manual-time counter beyond 32 days, 00 hours, and 00 minutes, or to back it up further than to 00 days, 23 hours, and 59 minutes. The computer senses these two limiting values, as explained above, and lights the Invalid Day lamp to remind the operator to change both the day count and the month count so that he can continue altering time in the same direction. However, practical considerations in circuit design make it possible for the operator to set the day counter to 00 days or to a value from 32 through 39. In this event the computer will immediately note the discrepancy and light the appropriate "tilt" lamp on the front porch.

The Invalid Time lamp indicates that an invalid year (before 1960 or after 1975) or an invalid month (other than 01 through 12) has been set in. Since the Computer Prediction Time indicators always show the last value of time sent to the computer, the operator can readily see which time component is invalid and then set in the correct value, so that the computer can turn off the Invalid Time lamp and resume normal operation.

When the surveillance circle surrounding a satellite has a computed radius greater than 504 naut mi, the computer turns on the Invalid Surv. Cir. lamp to indicate that the 504-naut-mi circle about the TN satellite on the expanded display should be larger by an unspecified amount. This lamp will be turned off whenever the radius of this or a subsequently selected satellite becomes 504 naut mi or less. The actual value, up to 5400 naut mi, will be shown on the page printer when tabular readout is requested.

A pushbutton switch is associated with each of the six lamps which have just been described. These switches, included for possible future use, can be wired to permit the lamps to be manually turned off. Since no remedial action is effected by this action, it is likely that some new function would have to be assigned to any lamp so controlled.

After the operator has selected a track number and pushed the Track Number Orbit button, thus requesting an orbit, the computer spends five seconds generating 128 orbit points. These points are spaced at equal intervals in time for one anomalistic period and are centered about the prediction time last sent to the computer prior to pushing the Track Number Orbit button. The computer could readily be altered to generate, say, 256 points. However, point positions are rounded off to 4 degrees in both latitude and longitude, and many duplicate points would then be placed in the orbit store without altering the display. Upon completion of the orbit calculation, the computer returns to updating the Track Number and Category stores.

After the operator has selected a Track Number and pushed the Tabular Readout button, the computer generates the data line portion of the tabular readout message, translates this into the page printer code, and causes the line to be printed. Each message line is printed in approximately seven seconds. As the lines are printed, the computer continues to update satellite positions on a time-shared basis. Column headings for this message were printed immediately following the previous message. Thus, there is minimum

delay in receiving the data following the request. When the data line has been sent, the computer automatically advances the printer line feed several lines to separate messages and then prints column headings in anticipation of a future message request. A complete tabular readout message appears as follows:

SPTR	CATEGORY	MO	DA	HR	MN	SC	LATIT	LONGIT	HEIGHT	SUR	AZ	EL	TN
1234	USA NAV	12	20	16	30	05	32.5N	158.3W	12,355	1,503	255	47	10

While the tabular readout could conceivable present any information which the computer can either compute or gate out of store, this readout message for the first version of SPAD is to be interpreted as follows: "Space Track object 1234 (a fictitious number here) is a United States navigation satellite; it is predicted that on Dec. 20 at 1630 hours and 05 seconds this object will be passing over latitude 32.5 degrees north, 158.3 degrees west at a height above sea level of 12,355 naut mi. At this time the satellite views an area immediately below having a radius of 1503 naut mi. At this time own ship's antenna can be pointed to azimuth 255 degrees, elevation 47 degrees, to pick up this orbiting object, for which orbital elements are now held in store location 10 within the computer memory." With a simple circuit modification, SPAD can automatically provide uncompensated antenna-pointing information in digital form as electrical voltages.

It will be noted that while the maximum height which can be indicated on the geographic display is 9990 naut mi, the tabular display can indicate heights up to 99,999 naut mi. Satellites higher than this will still be represented as being at 99,999 naut mi, and the resulting ambiguity must at present be tolerated.

The operational significance of the surveillance circle remains to be defined. For own ship, it might represent the distance from present position which the ship might travel in 24 hours. For a satellite, it could conceivably represent the area intercepted by the camera of a weather satellite, or perhaps it could be determined by the limited look-cone angle of an infrared scanner device. In any case, the radius of the surveillance circle of any satellite is calculated from look-cone angle and satellite height, and is constrained never to exceed 5400 naut mi (approximately one-fourth the earth's circumference).

PHILOSOPHY OF DESIGN

As stated in the Introduction, for the initial version of SPAD the objective is to investigate a concept and not to develop an equipment. Wherever feasible, features of possible utility have been included in order to provide a versatile research tool for determination of the Navy's requirement for a shipboard satellite position prediction and display equipment. Thus, such questions as the relative role of analog and digital circuit techniques, permissible power, size, weight, etc., as well as desired reliability and ease of maintenance are matters of secondary importance.

Basic Features of SPAD

The basic features of the SPAD concept are as follows. Satellite predictions are made at the user site, rather than at a central computation center. This decision leads to a relatively small message containing orbital elements and ancillary information, rather than a great mass of predicted data for all possible values of time. In order to ease the burden on a radio teletype channel, a relatively complex computer is needed at the user ship. The operator is provided a great deal of flexibility in selecting satellites and designating prediction time so that he need view only the information of immediate interest.

Selection of Computer

Because computers vary widely in their input and output characteristics, SPAD circuits for information flow to and from the prediction computer had to be designed specifically for the one selected computer. While other computers would presumably be suitable, their selection would probably involve considerable redesign of the interface circuits between SPAD and computer, as well as preparation of a new computer program.

The AN/UYK-1 was chosen as the prediction computer because it is a military computer and because it is already on the satellite-communication ship (USNS KINGSPORT, AG-164) where it was hoped SPAD could be evaluated. The NRL installation of SPAD uses the TRW-230 computer, a commercial version of the militarized AN/UYK-1. Most of its 8192-word memory is committed to the SPAD task.

When all shipboard computer requirements are taken into account, a better choice of computer might be the recently developed AN/UYK-3. Within the same size frame, this sister computer has a tripled speed capability and a doubled core-memory capacity. With an auxiliary core memory, the total capacity can be raised to 32,768 words, or four times the capacity of the present SPAD computer. SPAD has been designed so that the AN/UYK-3 can on an electronically time-shared basis readily perform the SPAD task and one or more other functions using one comprehensive program. This program would include the present SPAD program.

Selection of Display

A Charactron* cathode-ray tube (crt) was chosen as the geographic display device because a display console using this tube was available. With provision for an external symbol generator, any other crt could have been used.

A page printer was chosen as the tabular readout for reasons of convenience. The need for the hard copy which the printer provides has not been established. It is believed that the printer will be suitable for determining the desired format and other characteristics of a tabular readout, and thus its size, noise, and inherently low printing speed can be tolerated.

Map Overlay

To avoid the delay and expense involved in developing a suitable electronic map generator, an optical world-map overlay will be provided, with the edgelighting turned off for an expanded display. Because of the thickness of the crt faceplate, some parallax error is anticipated. This error could be eliminated by means of an electronic map generator such as a flying-spot scanner. Such a map generator should include a film strip, or perhaps a slide-changing mechanism, to provide map information. This would involve 270 frames for the rectangular expansion of Fig. 6, two frames for the polar region of Fig. 7, and one for the world map of Fig. 5, for a total of 273 frames. Currently available mechanisms are believed to be too slow in selecting a desired map frame from among so many available frames.

COMPUTER PROGRAMMING

Almost the entire SPAD operational program on the AN/UYK-1 computer has been written in the interpretive mode, using the basic logram package from the TRW library

*"Charactron" is a registered trademark of General Dynamics/Electronics Corp.

of programming aids. This mode was chosen since it lends itself to greater ease of writing and program debugging by personnel not intimately familiar with machine-language programming of this computer. Although a more efficient use of memory space and computation time would certainly be obtained through machine-language programming, it was felt that since SPAD is a research tool rather than an operational device, one could not justify the time and expense involved in obtaining or training personnel with more than a cursory knowledge of the more sophisticated machine-language programming techniques.

Memory Utilization

Based upon the interpretive mode, the SPAD program uses approximately 8000 of the available 8192 memory locations. This use includes memory space allocated for orbital element data on 88 satellites, the tables, constants and working locations, the actual operational program, which includes the executive and arithmetic routines, a set of special lograms written specifically for SPAD, and the basic logram package.

Updating the Orbital Element Store

While the Space Surveillance Station at Dahlgren generates the orbital elements and ancillary information for the satellites to be handled by SPAD, these data are not provided in the desired SPAD format (6,7) and hence must be processed prior to updating the computer store. Until such time as the Dahlgren facility will do this processing, SPAD operation ceases temporarily while the SPAD computer performs this function. Under consideration is the inclusion of an interrupt routine in the SPAD program which would permit the read-in and processing of new orbital data while SPAD remains in operation. Thus, it would not be necessary to shut down the system each time (say, weekly) new data arrive.

Executive Routines and SPAD Circuit Design

With close liaison established between computer programmer and circuit designer, it was possible for both tasks to proceed with what appear to be optimum results. Some executive routines appear to be longer than necessary, but this extra length led to significant circuit savings. On the other hand, there have been many areas where appropriate design of certain circuits has made the programming task simpler. There occurred very few areas where no compromise was possible; these were mainly due to the intrinsic operation of the computer, which naturally could not be altered. The greatest programming difficulties arose in the input-output functioning of the computer, such as the teletype readout routines, which require that satellite updating continue on the Charactron display tube while the teletype message is being read out. Since the teletype readout takes approximately 14 sec to execute, it is obvious that the updating requirement is a necessary one. Work is continuing on the executive routines in order to assure that all possible combinations of operator requests will be handled in a reasonable manner. There have been included in the program several error checks which not only prevent the operator from "hanging up" the computer, but which also indicate to him the occurrence and the source of his error. It should be noted that the design engineers have included, where practical, circuits which also prevent certain operator errors. A fuller discussion of the extent of the executive routines can be found elsewhere in this report in connection with the operation of the computer control panel.

Arithmetic Routines

The arithmetic routines are necessarily the most important of the entire program. It is these routines which take the raw data, consisting of seven orbital elements, and

make the appropriate computations in order to predict the satellite positions. The actual writing of the position-computation routine was relatively simple compared with the work involved in obtaining and deriving the equations to be implemented. The basic equations being implemented were obtained from two NRL reports (2,8). The SPAD routines are extensions of the Keplerian equations found in Refs. 2 and 8. That is, certain perturbation terms are computed in the routine rather than being obtained from a central station. This feature permits the updating of the raw orbital element message with a minimum of words.

Perturbation of Mean Anomaly

One area which has not been treated in Refs. 2 and 8, and in fact which is not found explicitly in any of the reference texts on celestial mechanics, is the perturbation of the mean anomaly due to the change in the orbital period. Most treatments are concerned with either the celestial bodies or consistently stable satellites; their periods and thus their mean anomalies are, for all practical purposes, constant. However, in the process of predicting positions many days in advance, we are faced with some satellites whose periods are constantly degenerating, thus altering the mean anomaly. Since the mean anomaly is used in solving Kepler's equation as a first step in predicting position, it may be seen that an invalid value for mean anomaly will lead to increasing position errors at prediction times increasingly removed from the epoch time for which new orbital data were derived at the space-surveillance station.

SPAD personnel have worked with this problem and have spent much time in conference with other personnel at NRL in attempting to develop a solution which will yield the best possible predicted position and yet be performed in the minimum of computer time. The minimum time requirement can easily be understood when it is realized that as many as 11 satellite positions are being computed each updating cycle. An approach presently being investigated is the computation of the mean anomaly using a period averaged over the interval from epoch time to the time of prediction.

Part of the arithmetic routines are the equations for computing the azimuth and elevation angles of a satellite from own ship's position. A routine which computes the radius of a surveillance circle, that area which a satellite subtends via its look-cone angle, is also included. The readout is in two forms, one for teletype hard copy and another for geographic display purposes. Other routines have been written to perform the necessary coordinate transformations when an expanded display, either rectangular or polar, is shown.

The SPAD operational program as described above has been completed and is now being debugged.

SPAD INSTRUCTION MANUAL

A preliminary instruction manual is being prepared as design and construction of SPAD proceeds. While not conforming to the format of formal instruction books supplied with approved operational display equipment, this manual is intended to meet the needs of NRL engineers, shipyard installation personnel, naval electronic technicians, and evaluation personnel who have received some instruction in SPAD design and operation. Thus, the SPAD manual includes logistics data for installation, layout diagrams, logic diagrams, wiring diagrams, cabling lists, photographs of typical electrical waveforms, and brief descriptions of theory and manner of operation.

While the SPAD instruction manual describes the NRL installation, it also includes data for installation on board the USNS KINGSPORT, should this contingency arise. With

regard to signal runs, the main difference is that the NRL installation provides within the display formatter enclosure sources for certain signals which are currently provided by other equipment now on the KINGSPORT.

PRELIMINARY PERFORMANCE DATA

A technical evaluation of SPAD is proceeding as portions of the equipment are completed and installed. Thus, some preliminary performance data are available, and these data indicate that design objectives are being met.

Satellite Capacity in Store

With the present program, the 8192-word memory provides room for a repertoire of about 88 satellites. This capacity should be adequate to demonstrate the SPAD concept, and no immediate effort will be made to increase it by using more sophisticated programming techniques to reduce memory requirements for the operational program.

Position Prediction Error

As a design requirement, the prediction process had to introduce a position error of not more than 60 naut mi, or one degree of latitude or longitude at the equator. Prediction accuracy is such that position error on the world map is limited by display resolution to plus or minus 30 naut mi in longitude and 15 naut mi in latitude. On the expanded display, this resolution is improved by a factor of about ten, with a corresponding improvement in prediction accuracy. For decaying satellites, with positions presented to the nearest 0.1 degree on the tabular readout, there have been prediction errors as much as 0.2 degree at nine days from epoch. If the tabular readout message were to be reorganized, a simple programming change would permit position readout to the nearest 0.01 degree.

Orbit and Tabular Readout Delays

A delay of five seconds is involved in computing an orbit and placing the positions in store. While satellite-position stores are not updated, no satellite will move more than 30 naut mi in these five seconds.

Normally, the 11 satellite positions on the world-map display are updated each 1.1 sec. If the page printer is writing, the interleaving process raises this updating period to 1.36 sec. Since time is offered to the computer at least each second, it is evident that the updating intervals lead to negligible position error.

Following a Tabular Readout request, the page-printer data line is completed after a wait of 11 to 13.2 sec, depending upon whether satellite updating is being done in either the World Map or Expanded modes, respectively. The actual printing of a line of data is accomplished in about seven seconds by the page printer.

EVALUATION PLANS FOR SPAD

Current plans provide for evaluation of SPAD at NRL. However, the operational evaluation project details (9) were prepared with the USNS KINGSPORT in mind as an evaluation site. The advantages of this site and reasons for recommending NRL as an alternative site will now be discussed.

By virtue of their special training and previous experience in working with satellites, KINGSPORT personnel would seem particularly well qualified to maintain, operate, and assess the capabilities and limitations of SPAD. In its present configuration, SPAD is tailored specifically for this ship in order to avoid unnecessary design expense.

Aside from considerations of personnel, another ship could probably be used provided SPAD is augmented to include an AN/UYK-1 digital computer and a source of digital signals representing real time and ship's position, course, and speed in the format presently available on the KINGSPORT.

When it became apparent that the KINGSPORT would not be available, NRL personnel began planning for a shore evaluation rather than forfeit the time and money involved in finding and modifying a suitable ship. For this purpose a precision real-time generator and own-ship's-information simulator were added to SPAD. Ship's position, course, and speed can now be inserted manually at suitable intervals; this arrangement, while not ideal, should permit evaluation of SPAD to proceed.

SPAD can still be installed on the KINGSPORT, should this ever be desired. Since it is the concept and not the equipment to be evaluated, it would seem that a short installation should lead to answers to most questions of immediate interest. However, questions relating to just how a commander at sea would utilize SPAD-generated information can probably best be studied via sea trials. At this time, it would be well to consider the matter of electronically time-sharing a computer among several functions, including the SPAD function of predicting and displaying selected satellite positions.

CONCLUSIONS

With design and construction of the NRL Satellite Position Prediction and Display (SPAD) nearing completion, enough experience has been gained with operating portions to suggest the following conclusions.

1. SPAD in its present form very nearly meets the tentatively assumed set of operational requirements (1), with position prediction errors being on the order of 0.2 degree in latitude and longitude for predictions made nine days after updating the orbital elements. (Predictions made by the NRL NAREC computer are used for comparison.)

2. To achieve this accuracy, it is necessary to take into account the rate of change in semimajor axis of the orbit.

3. As presently programmed, the SPAD prediction computer has its core memory of 8192 words almost entirely assigned to the SPAD function, with nearly 6600 words being used by the program and about 1600 words used to store raw data for 88 satellites.

4. With a faster computer such as the AN/UYK-3, having greater memory capacity, one computer can perform SPAD predictions and other functions on an electronically time-shared basis. The present program is compatible with this computer.

5. The present slow and noisy page printer should be replaced with a faster all-electronic tabular readout display. This will probably require some change in the present program to provide maximum speed.

6. The display formatter and display console of Fig. 1 are suitable as a research tool for evaluating SPAD, with room being provided for adding other features which experience may reveal to be desired.

7. Both formatter and console can be repackaged to provide substantial reductions in size, weight, and power for a service version of SPAD.

8. A service version of SPAD should receive orbital elements prepared in the SPAD format at the space surveillance station or other shore facility. For research purposes, this data conversion is now done manually at NRL, using data received in another format.

ACKNOWLEDGMENTS

This work was carried out under the general guidance of Mr. E.F. Kulikowski, who prepared the original proposal for SPAD (1). Engineers who assisted in circuit design and computer programming include Messrs. J.R. Boller, T.L. Francavilla, and A.W. Felsher, Jr.

REFERENCES

1. Kulikowski, E.F., "Proposed Study and Development of Earth Satellite Display Equipment," Enclosure (1) to NRL letter to Bureau of Ships; 5110-39:EFK:eam Ser 5197, May 31, 1960

2. Hall, G.L., "Satellite Track Computation for Display Purposes," NRL Report 5652, Oct. 3, 1961

3. Talmadge, H.G., Jr., "An Orbit Computer for a Satellite Position Display," NRL Report 5624, July 31, 1961

4. Talmadge, H.G., Jr., "A Shipboard Satellite Position Display," NRL Report 5638, Aug. 7, 1961

5. Talmadge, H.G., Jr., and Orsino, R.J., "SPAD - A Satellite Position Prediction Display," published in proceedings of Third National Symposium on Information Display, sponsored by Society for Information Display, San Diego, Calif., Feb. 1964

6. Talmadge, H.G., Jr., "Problems Involved in Feeding Orbital Elements Message and Own Ship Information into SPAD Computer," NRL Memorandum for File 5110-34:HGT: eam, Mar. 11, 1964

7. Orsino, R.J., "Preparation of Orbital Elements in the SPAD Format for Shipboard Predictions," NRL Memorandum for File 5110-37:RJO:eam, Mar. 18, 1964

8. Dahl, W.D., "Satellite Coordinates and Real-Time Position Computation," NRL Report 5659, Sept. 12, 1961

9. "Operational Evaluation Project Details," Enclosure (1) to NRL letter 5110-91:HGT:eam Ser 8736, Oct. 7, 1963, to Bureau of Ships (Code 360)

APPENDIX

LIST OF CONTROLS ON COMPUTER CONTROL PANEL

The need for a separate listing of buttons and other switches on the computer control panel is justified as follows: Where these controls and indicators are mentioned in the main body of this report, they are described in terms of overall operation of SPAD. This leads to considerable cross-referencing of these items because of their multiplicity and the great versatility provided in selection of displayed information. Thus, it is difficult to find here an adequate description of a given button. This appendix provides essentially the same information but rearranged in a manner providing ready reference to a given button or other switch and a description of its purpose.

The following listing of buttons and other switches on the computer control panel begins at the upper left-hand corner and proceeds roughly counterclockwise with the controls as they appear in Fig. 3b. To avoid needless duplication of description, some controls are listed as a group. A description of a given button may mention other buttons because of interaction of functions. Where convenient, a brief comment on the efficacy of a control is offered.

CATEGORY IN STOCK SWITCHES

The Category in Stock switches are visible through the open door of Fig. 3a. These switches, arranged in the same array as the 16 category switches, are set to light green lamps on the corresponding category-selection switches.

TABULAR READOUT

This button is pushed when the operator desires to obtain the tabular-readout message on the satellite designated by the state of the two Track-Number Select dials. The time for which the message information is computed is indicated on the Computer Prediction Time lamps and is also printed as part of the message.

PRECISION SELECT

Repeated pushing of this button serves to turn on or off the Nonprecision lamp on the front porch (Fig. 8). This operation also instructs the computer to predict rapidly in the nonprecision mode or to perform more iterations in solving Kepler's equation and so provide greater precision in prediction. As an operator's option, the nonprecision mode is available only for the world-map display.

CATEGORY SELECT

Repeated pushing of each of the 16 Category Select buttons (Table 1, Fig. 4) alternately requests or deletes the updating of satellites of the corresponding category. The lamps located behind each category button are described in Fig. 4.

TEST ACKNOWLEDGE

As part of the trouble-shooting procedure, it may be necessary to push the Test Acknowledge button to simulate receipt of an acknowledge pulse from the computer. Such an acknowledgment is necessary in order that the computer control panel can offer a new control word to the computer. The Test Acknowledge button will turn off the Status Interrupt lamp if that lamp is lit.

DELAY CATEGORY INTERRUPT

While this button is held depressed, no change in the selection of categories of satellites to be viewed can be sent to the computer. Thus, the operator can, while pushing this button, make any desired changes in selection of categories without immediately altering the content of his world-map display. When the Delay Category Interrupt button is released, the computer then reads the category word to determine the state of the category-selection buttons.

STATUS INTERRUPT

The Status Interrupt lamp is lit whenever a control word is sent to the computer and is extinguished when the computer acknowledges receipt of that word. While the lamp remains lit no new command can be sent to the computer. Ordinarily, computer response is so fast that the brief red flash of this lamp is barely visible.

SPAD ON AIR

This lamp comes on to indicate that the computer control panel has access to the computer via the eldiscon switch (Fig. 2).

CANCEL

This button cancels certain commands previously sent to the computer and causes the computer to read the present category selection. The commands which are canceled are the Category Cycle, the Track Number Delete, and the Track Number Call-up commands. Until further changes are made, the display will be in the world-map mode, showing positions of the first ten (or less) satellites in the priority sequence.

CATEGORY CYCLE

This button may be pushed to cause the computer to ignore the present ten satellites now filling the ten category stores and proceed to the next ten, following the prescribed priority sequence (Table 2). This cycling operation causes the display to revert to the world-map mode if it happened to be in the expanded mode. Repeated operations of the Category Cycle button will cause all red and yellow lamps to be extinguished.

CATEGORY DELETE

This button erases all memory of category requests and leaves the display in the world-map mode with no satellites in the ten category stores.

TRACK NUMBER DELETE

This button is pushed to instruct the computer to delete from its place in one of the ten category stores the satellite having the track number set on the two Track No. Select dials. If any red or yellow lamps are lit in the category-selection buttons, indicating store overload, then the computer will replace the deleted track with the next satellite in the priority sequence. Should it happen that the track to be deleted is not yet in a category store, the computer will ignore the request. In either case, however, the display will be left in the world-map mode, even though it may have previously been in the expanded mode.

TRACK NUMBER CALL-UP

When this button is pushed, the computer will read the state of the Track No. Select dials and place a predicted position for this satellite in an empty category store. Should all ten stores be full, the operator must then create an empty store by some means such as by deleting an unwanted track. When the Track Number Call-up button is pushed, the display will be left in the World Map mode, even though it may have previously been in the Expanded mode.

SPARE INDICATOR

This indicator, located to the right of the Track Number Call-up button, is available for possible future use.

TRACK NUMBER ORBIT

The Track Number Orbit button is more versatile than the Track Number Call-up button, in that it can be used to request a satellite position with either an orbit (world-map mode) or a velocity vector (expanded mode). The satellite is designated by the state of the two Track No. Select switches, and the predicted position is placed in the TN (Track Number) store so that this information, together with the contents of the OS (Own Ship) store, will always appear on the geographic display, regardless of whether the display is in the world-map or the expanded mode.

OFF-CENTER

Repeated operations of the Off-Center button cause the associated TN and OS lamps to be lit in alternate sequence. As a result, the expanded display will be expanded about either the satellite in the TN store of own ship in the OS store. An operation of the Off-Center button will automatically cause selection of the expanded scale, if the display was previously in the world-map mode.

MAP SCALE

Repeated operations of the Map Scale button cause the associated EXP and WM lamps to be lit in alternate sequence. As a result, the display will be in the expanded or world-map modes, respectively.

As explained previously, the EXP lamp of the Map Scale button will be lit following any push of the Off-Center button. On the other hand, the WM lamp will be lit following

a push of any of the following buttons: Track Number Call-up, Track Number Delete, Category Delete, Category Cycle, Cancel, and any of the 16 category-selection buttons.

TIME SELECT

Repeated operations of the Time Select button cause the associated Man and Clock lamps to be lit in alternate sequence. As a result, position predictions will be for manual (arbitrary) or clock (real) time, respectively. The Time Select position will automatically be placed in the Man mode whenever either the Manual Time Transfer or the Clock Time Transfer button is pushed.

TN SELECT/YEAR SELECT/MONTH SELECT

The state of these two thumb-wheel dials is automatically interpreted as either a track number, a year, or a month, depending upon which computer-control button is pushed in conjunction with the setting of the dials. Valid track numbers are from 00 through as high as 87, depending on how many satellites were included in the weekly message updating orbital elements. (With more computer memory available, the satellite capacity could be increased.) With present computer programming, valid years are from 60 through 75. Valid months are, of course, 01 through 12. As explained in the main body of the report, an invalid request will cause the appropriate "tilt" lamp to light on the porch panel.

MANUAL TIME TRANSFER

This button is pushed when it is desired to set the manual-time counter to the state indicated on the Manual Time dials. The transferred time will appear on the Computer Prediction Time lamps, thus indicating that the computer is now receiving this manually set time. If the Time Select switch is in the Clock position as indicated by the Clock lamp of that button being on, pushing the Manual Time Transfer button automatically switches it into the Manual position. This provides a means of setting in a new time and offering it to the computer in a single operation.

CLOCK TIME TRANSFER

Operation of the Clock Time Transfer button causes the manual-time counter to be set to the real time value, thus avoiding the necessity of dialing this time on the Manual Time dials. This button is used when it is desired to accelerate or back-up time starting from the real time, since only the manual-time counter can be so manipulated. This button also switches the Time Select indicator into the Manual time mode if it is not already in that mode.

MANUAL TIME DIALS

These dials are used to set up the arbitrary time which is to be transferred into the manual-time counter. The minutes and seconds dials have mechanical stops preventing them from being set beyond 59. For any hour setting greater than 23, circuit interlocks associated with the hour dials cause the right-hand dial lamp to be extinguished and also deactivate the Manual Time Transfer button to inhibit the time transfer. The left hand Day dial has a mechanical stop so that it cannot be advanced beyond 3. An invalid day (00 or 32 through 39) causes the computer to stop computation and light the appropriate "tilt" lamp on the front-porch panel.

DAY SET

This button sets the real-time day counter to the day indicated on the Manual Time Day dials. The day counter is automatically advanced every 24 hours up to a maximum count of 31 days before being recycled to begin with a count of one. It is necessary at times to correct for the proper day of the month. This would occur, for instance, when passing in time from the 28th day of February to the first day of March.

YEAR SET AND MONTH SET

Each of these two buttons is pushed when it is desired to obtain satellite position predictions for a given year and month, respectively. Since both the year and the month are designated by the setting of the same TN Number Select/Year Select/Month Select dials, the computer interprets the dial setting as either year or month, according to which button is pushed. It is evident that if both a new year and a new month are desired, two separate settings of the dials must be made, with corresponding pushes of the Year and the Month Set buttons.

LAMP TEST

This button causes all the lamps on the Computer Control Panel to be energized. Since the panel lamps not only illuminate the buttons but also provide pertinent information to the operator concerning the display, it is necessary that the condition of the lamps be checked periodically. This button provides a simple means of doing so.

COMPUTER PREDICTION TIME

Regardless of whether manual or clock time is being used, the time corresponding to displayed positions is indicated by the 12 computer prediction time indicators which employ two indicators to indicate year, month, day, hour, minute, and second, respectively. Whenever the computer accepts a new time value, these 12 indicators are changed accordingly. Clock time is offered to the computer each second, and manual time is offered four times each second.

This page intentionally left blank.

Security Classification

DOCUMENT CONTROL DATA - R&D

(Security classification of title, body of abstract and indexing annotation must be entered when the overall report is classified)

1. ORIGINATING ACTIVITY *(Corporate author)*
U.S. Naval Research Laboratory
Washington, D.C. 20390

2a. REPORT SECURITY CLASSIFICATION
UNCLASSIFIED

2b. GROUP

3. REPORT TITLE
OPERATION AND PERFORMANCE OF THE NRL SATELLITE POSITION DISPLAY

4. DESCRIPTIVE NOTES *(Type of report and inclusive dates)*
An interim report on one phase of the problem.

5. AUTHOR(S) *(Last name, first name, initial)*
Talmadge, H.G., Jr., and Orsino, R.J.

6. REPORT DATE
August 11, 1965

7a. TOTAL NO. OF PAGES
32

7b. NO. OF REFS
9

8a. CONTRACT OR GRANT NO.
NRL Problems Y01-01 and Y02-02

b. PROJECT NO.
SF 019-01-03, Task 6168

c. RF 007-01-41-4450

d.

9a. ORIGINATOR'S REPORT NUMBER(S)
NRL Report 6219

9b. OTHER REPORT NO(S) *(Any other numbers that may be assigned this report)*

10. AVAILABILITY/LIMITATION NOTICES
Unlimited availability - Available at CFSTI -

11. SUPPLEMENTARY NOTES

12. SPONSORING MILITARY ACTIVITY
Dep't of the Navy (Bureau of Ships and Office of Naval Research)

13. ABSTRACT

Nearing completion at NRL is an experimental Satellite Position Prediction and Display equipment (SPAD) for shipboard use. SPAD will store orbital elements and related information of 88 satellites in a digital computer, which then will predict and display positions and other information on up to eleven satellites. Position and height information is updated on the 19-in. geographic display each 1.1 sec. The prediction time can be varied forwards or backwards to permit a rapid determination of where and when different configurations of satellite orbits, for instance, satellite grouping, will occur. An orbit with a granularity of four degrees in both latitude and longitude can be computed in just five seconds. The operational program, prepared for the AN/UYK-1 digital computer, takes into account the variation of anomalistic periods of irregular satellites. Thus, positions of decaying satellites have been printed on the tabular readout with position errors of as much as 0.2 deg in latitude or longitude at nine days from epoch. A surveillance circle up to 504 naut mi in radius for one selected satellite can be painted on the expanded display. Course, speed, and position of own ship are displayed at all times.

A preliminary instruction manual is being prepared as design, construction, and technical evaluation of circuits proceed. An outline of the proposed operational evaluation has been prepared. The utility of SPAD in providing rapid, flexible, on-the-spot predictions of satellite activities will be studied during an evaluation of SPAD planned to be completed in the fall of 1965.

DD FORM 1 JAN 64 1473

Security Classification

14. KEY WORDS	LINK A ROLE	LINK A WT	LINK B ROLE	LINK B WT	LINK C ROLE	LINK C WT
Satellite position display						
Satellite position prediction						
World map display						
Expanded world map display						
Polar region display						
Satellite surveillance circle						
Satellite category selection						
Tabular readout						
Orbital elements, storage and selection						
Perturbation of mean anomaly						

INSTRUCTIONS

1. ORIGINATING ACTIVITY: Enter the name and address of the contractor, subcontractor, grantee, Department of Defense activity or other organization *(corporate author)* issuing the report.

2*a*. REPORT SECURITY CLASSIFICATION: Enter the overall security classification of the report. Indicate whether "Restricted Data" is included. Marking is to be in accordance with appropriate security regulations.

2*b*. GROUP: Automatic downgrading is specified in DoD Directive 5200.10 and Armed Forces Industrial Manual. Enter the group number. Also, when applicable, show that optional markings have been used for Group 3 and Group 4 as authorized.

3. REPORT TITLE: Enter the complete report title in all capital letters. Titles in all cases should be unclassified. If a meaningful title cannot be selected without classification, show title classification in all capitals in parenthesis immediately following the title.

4. DESCRIPTIVE NOTES: If appropriate, enter the type of report, e.g., interim, progress, summary, annual, or final. Give the inclusive dates when a specific reporting period is covered.

5. AUTHOR(S): Enter the name(s) of author(s) as shown on or in the report. Enter last name, first name, middle initial. If military, show rank and branch of service. The name of the principal author is an absolute minimum requirement.

6. REPORT DATE: Enter the date of the report as day, month, year; or month, year. If more than one date appears on the report, use date of publication.

7*a*. TOTAL NUMBER OF PAGES: The total page count should follow normal pagination procedures, i.e., enter the number of pages containing information.

7*b*. NUMBER OF REFERENCES: Enter the total number of references cited in the report.

8*a*. CONTRACT OR GRANT NUMBER: If appropriate, enter the applicable number of the contract or grant under which the report was written.

8*b*, 8*c*, & 8*d*. PROJECT NUMBER: Enter the appropriate military department identification, such as project number, subproject number, system numbers, task number, etc.

9*a*. ORIGINATOR'S REPORT NUMBER(S): Enter the official report number by which the document will be identified and controlled by the originating activity. This number must be unique to this report.

9*b*. OTHER REPORT NUMBER(S): If the report has been assigned any other report numbers *(either by the originator or by the sponsor)*, also enter this number(s).

10. AVAILABILITY/LIMITATION NOTICES: Enter any limitations on further dissemination of the report, other than those imposed by security classification, using standard statements such as:

(1) "Qualified requesters may obtain copies of this report from DDC."

(2) "Foreign announcement and dissemination of this report by DDC is not authorized."

(3) "U. S. Government agencies may obtain copies of this report directly from DDC. Other qualified DDC users shall request through _____."

(4) "U. S. military agencies may obtain copies of this report directly from DDC. Other qualified users shall request through _____."

(5) "All distribution of this report is controlled. Qualified DDC users shall request through _____."

If the report has been furnished to the Office of Technical Services, Department of Commerce, for sale to the public, indicate this fact and enter the price, if known.

11. SUPPLEMENTARY NOTES: Use for additional explanatory notes.

12. SPONSORING MILITARY ACTIVITY: Enter the name of the departmental project office or laboratory sponsoring *(paying for)* the research and development. Include address.

13. ABSTRACT: Enter an abstract giving a brief and factual summary of the document indicative of the report, even though it may also appear elsewhere in the body of the technical report. If additional space is required, a continuation sheet shall be attached.

It is highly desirable that the abstract of classified reports be unclassified. Each paragraph of the abstract shall end with an indication of the military security classification of the information in the paragraph, represented as *(TS)*, *(S)*, *(C)*, or *(U)*.

There is no limitation on the length of the abstract. However, the suggested length is from 150 to 225 words.

14. KEY WORDS: Key words are technically meaningful terms or short phrases that characterize a report and may be used as index entries for cataloging the report. Key words must be selected so that no security classification is required. Identifiers, such as equipment model designation, trade name, military project code name, geographic location, may be used as key words but will be followed by an indication of technical context. The assignment of links, roles, and weights is optional.