NRL REPORT 3796

SOME DIRECTIONAL PROPERTIES OF DEEP-WATER AMBIENT NOISE

R. J. Urick

January 16, 1951

Approved by:

H. L. Saxton, Superintendent, Sound Division

NAVAL RESEARCH LABORATORY
CAPTAIN F. R. FURTH, USN, DIRECTOR
WASHINGTON, D.C.

APPROVED FOR PUBLIC
RELEASE - DISTRIBUTION
UNLIMITED

DISTRIBUTION

OpNav
Attn: Op-31
Attn: Op-34
Attn: CDR Alexander
BuShips
Attn: Code 847
ONR
Attn: Mr. Annis, Code 420
Attn: Code 466
CO & Dir., USNEL
CDR, USNOTS
Attn: Reports Unit
Supt., USNPGS
CO and Dir., USNUSL, New London, Conn.
Hydrographer, Hydrographic Office
CO, USNPF, Indian Head, Md.
Attn: CAPT Harrell
CO, SurAsDevDet, Key West
CDR, NADC, Johnsville, Pa.
ComSubDivELEVEN
ComSubDevGPTWO
CDR, NATC, Patuxent River
Attn: Electronics Test
Wright-Patterson AFB
Attn: BAU-CADO
Attn: CADO-E1
OCSigO
Attn: Ch. Eng. & Tech. Div., SIGTM-S
CG, SCEL
Attn: SCEL Liaison Office
NRC, USW Committee
Attn: Mr. Coleman
Office of Tech. Services, Dept. of Commerce
Div. of Public Documents, GPO
Attn: Library
RDB
Attn: Information Requirements Branch
Attn: Navy Secretary
Naval Res. Sec., Science Div., Library of Congress
Attn: Mr. J.H. Heald

CONTENTS

Abstract iv

Problem Status iv

Authorization iv

INTRODUCTION 1

GENERAL AMBIENT-NOISE INTEGRAL 2

NONDIRECTIONAL HYDROPHONE 2

Effect of the Bottom 4
Discussion of Nondirectional Case 5

DIRECTIONAL HYDROPHONES 7

Vertical Line Hydrophone 8
Horizontal Line Hydrophone 9
Rectangular Piston Hydrophone 10
Circular Piston (Searchlight) Hydrophone 12

CONCLUSIONS 15

ABSTRACT

Because of its variation with sea state, the ambient noise observed in the deep ocean is generally believed to be of surface origin. Such surface noise is not isotropic, but has certain directional properties which depend on the radiation pattern of the elements of surface area.

In this report the directional nature of surface-generated ambient noise is investigated theoretically. The relative contribution to the total noise of near and far surface areas is found, and an estimate is obtained of the noise intensity produced by a unit area of surface at unit distance. The discrimination against surface noise by a directional hydrophone is expressed as an "ambient noise directivity factor" and examples of its computation for line and searchlight hydrophones are given.

PROBLEM STATUS

This is an interim report on one phase of the continuing problem of sound propagation in the ocean.

AUTHORIZATION

NRL Problem S02-03R
NR 522-030

SOME DIRECTIONAL PROPERTIES OF DEEP-WATER AMBIENT NOISE

INTRODUCTION

The properties of deep-water ambient noise other than its spectrum and its variation with sea state form a subject that has been strangely neglected. In spite of the importance of ambient noise in underwater listening, little has been done on its directional characteristics, nor on the discrimination against ambient noise by a directional hydrophone. Although we can state with some assurance, because of its increase with increasing sea state, that deep-water noise is of surface origin, at least for sea states above 0, we do not know how such surface-generated noise is radiated in angle from the vertical, nor do we know the absolute noise intensity radiated by a unit area of surface. These matters have direct pertinence to the subject of ambient-noise discrimination by a directional hydrophone.

The British have recently been concerned with this subject in connection with sonobuoy hydrophones, and three classified reports have appeared. Their treatment of the subject, however, is rather disjointed and obscure, and it seems profitable to examine the directional nature of ambient noise in a more systematic fashion.

In this report there will first be derived a generalized integral for the ambient noise intensity as seen by a directional hydrophone. If the radiation from an element of surface area is assumed to be distributed in angle according to some power, n, of the cosine of the angle with the vertical, the observed intensity will depend upon an integral of the form

$$E_n\ (a) \equiv \int_a^\infty \frac{e^{-y}}{y^{n+1}}\, dy$$

for any value of n including n = 0 (radiation isotropic downward). Curves will be given by which the depth dependence of ambient noise and the relative contributions of near and far surface elements can be found. Directional hydrophones will be considered, and although no formal difficulty exists, exact evaluation of the integrals will be found to be almost impossible; but, with more or less valid approximations, expressions for the ambient noise discrimination of linear and search-light hydrophones in different orientations will be obtained. This discrimination will be specified by an "ambient noise directivity factor," *ja*, analogous to the directivity factors *js* and *jv* for surface and volume reverberation. Restriction will be made to isovelocity water, that is, to straight line propagation; the effect of thermal gradients on ambient noise is an interesting, and possibly important, subject for future investigation.

GENERAL AMBIENT-NOISE INTEGRAL

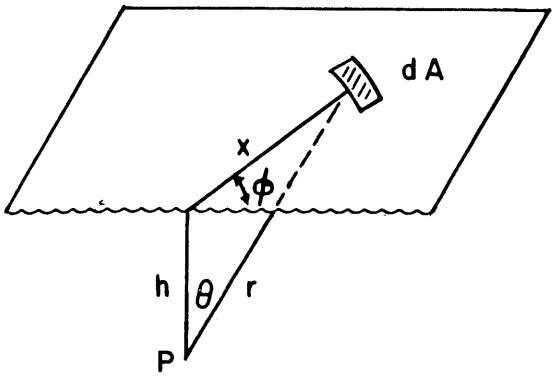

Let us consider a hydrophone at point P, at a depth h below the surface and adopt cylindrical coordinates r, θ, φ with θ the angle with the vertically upward direction, and φ the azimuthal angle. Suppose a unit area of surface, such as a square yard, produces a noise intensity of unity at a distance of 1 yard in the downward direction, and consider the element of surface area $dA = x \cdot d\varphi \cdot dx$ located at distance r in direction θ, φ from the hydrophone. Let the noise intensity of the surface element in the direction to the hydrophone be at 1 yard $G\ (\theta, -\varphi)$. Then at P its intensity will be

$$dI = G\ (\theta, -\varphi) \frac{e^{-\alpha r}}{r^2}\ x\ dx\ d\varphi,$$

where $e^{-\alpha r}$ represents the effect of absorption or attenuation. The nature of the radiation distribution function, G, is unknown. G may well depend on bearing φ in a manner related to the wind direction; that is, G may be different in directions up-, down-, and across-wind, especially if a swell is running. In what follows, however, for simplicity we will take G to be independent of φ, and to depend on θ alone. Then if a hydrophone be used with response $F\ (\theta, \varphi)$, the noise contribution of each surface element will be

$$dI = F\ (\theta, \varphi)\ G\ (\theta) \frac{e^{-\alpha r}}{r^2} x\ dx\ d\varphi\ .$$

Putting $h \tan \theta = x$; $h \sec \theta = r$; $dr = h \sec \theta \tan \theta\, d\theta$; $x\ dx = r\ dr$,

we obtain

$$dI = F\ G\ e^{-\alpha h \sec \theta} \tan \theta \cdot d\theta\ \ d\varphi\ ,$$

and on integrating over the whole infinite plane surface we obtain

$$I = \int_0^{2\pi} d\varphi \int_0^{\pi/2} F\ (\theta, \varphi)\ G\ (\theta)\ \tan \theta \cdot e^{-\alpha h \sec \theta}\ d\theta\ .$$

This is a general expression for the ambient noise response of a directional hydrophone in an absorptive isovelocity ocean when the noise radiation is independent of φ.

NONDIRECTIONAL HYDROPHONE

Simplification is possible for a nondirectional hydrophone, $F\ (\theta, \varphi) = 1$. Then

$$I = 2\pi \int_0^{\pi/2} G\ (\theta)\ \tan \theta \cdot e^{-\alpha h \sec \theta}\ d\theta\ .$$

Evaluation of this integral is feasible if it be assumed that $G\ (\theta)$ is some power, n, of cos θ. This is no great restriction, since any function $G\ (\theta)$ can be represented for practical purposes by a sum of such terms with different n's.

$G\ (\theta)$ depends on the noise-producing process at the surface, and may even depend on frequency. It includes the effect of shadowing of the noise radiation by the troughs of

waves at angles slightly inclined to the horizontal. If n = 1, Lambert's Law of heat and optics finds an analog. Putting, then,

$$G(\theta) = \cos^n\theta = (h/r)^n ,$$

we obtain for a nondirectional hydrophone

$$I_n = 2\pi\int_h^\infty (h/r)^n \frac{e^{-\alpha r}}{r} dr ,$$

and on substituting $\alpha r = y$, $dr = dy/\alpha$

$$I_n = 2\pi (\alpha h)^n \int_{\alpha h}^\infty \frac{e^{-y}}{y^{n+1}} dy$$

$$\equiv 2\pi (\alpha h)^n E_n(\alpha h) .$$

Tables are available[1] of the exponential integral $E_o(\alpha h) \equiv \int_{\alpha h}^\infty \frac{e^{-y}}{y} dy$ extending down to the small values of αh required. Integrals for higher integral values of n can be evaluated by parts, and so reduced to E_o. Thus

$$n = 1;\ E_1(\alpha h) \equiv \int_{\alpha h}^\infty \frac{e^{-y}}{y^2} dy = -E_o(\alpha h) + \frac{e^{-\alpha h}}{\alpha h}$$

$$n = 2;\ E_2(\alpha h) \equiv \int_{\alpha h}^\infty \frac{e^{-y}}{y^3} dy = -\frac{1}{2}\left[-E_o(\alpha h) + \frac{e^{-\alpha h}}{\alpha h} - \frac{e^{-\alpha h}}{(\alpha h)^2}\right].$$

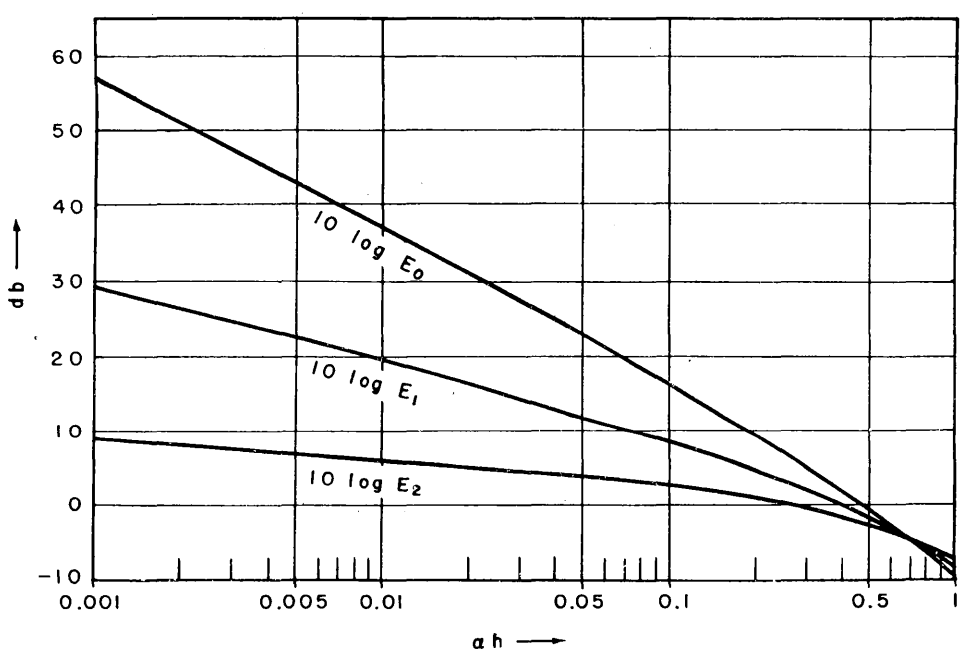

Figure 1 - The functions 10 log E_0, 10 log E_1, and 10 log E_2 vs. αh

[1] Tables of Sine, Cosine, and Exponential Integrals, Vol.I, Federal Works Agency, Mathematical Tables Project, New York, 1940

Values of 10 log E_0, 10 log E_1, and 10 log E_2 are plotted in Figure 1 over a range of αh, and were computed by Mr. B. Schweitzer.

At sonar frequencies and at customary depths, αh is small. From the series expansion of E_o (αh) it is apparent[2] that for αh small, say less than 0.1, we have approximately

$$E_o(\alpha h) = -0.577 - \log_e (\alpha h),$$

and for other values of n, and for αh small,

$$E_n (\alpha h) = \frac{1}{n} (\alpha h)^{-n}$$

approximately. It is also useful to have the ratio of E_n for two values of the argument, one greater than the other by a factor γ. As long as αh and h are both small compared with unity, we have approximately for n = 0

$$\frac{E_o (\gamma \alpha h)}{E_o (\alpha h)} = 1 - \frac{\log_e \gamma}{E_o (\alpha h)}$$

and for other values of n,

$$\frac{E_n (\gamma \alpha h)}{E_n (\alpha h)} = \gamma^{-n} .$$

Effect of the Bottom

The foregoing applies to water of infinite depth. The bottom adds, in addition to the direct path from each surface area, paths from a series of images in the bottom and surface. The ambient noise produced by each image can be computed in a manner similar to that for the nonreflected sound. The first image produces the intensity $2\pi\ [\alpha(2D - h)]^n \cdot E_n[\alpha(2D - h)]$ and the second image $2\pi\ [\alpha(2D + h)]^n \cdot E_n[\alpha(2D + h)]$, where D is the water depth,

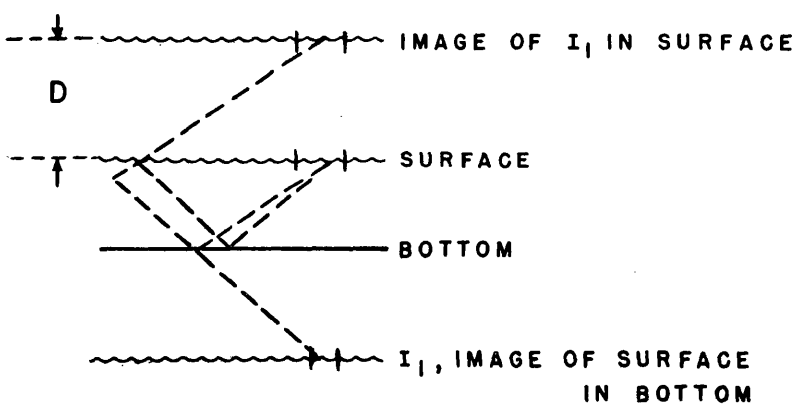

[2] Ibid.

and so on for higher order images. In deep water, except at low frequencies and for directive hydrophones tilted downward these bottom reflections can be normally neglected because of absorption. For downward tilts, very often only the first reflection will be significant.

Discussion of Nondirectional Case

The argument αh of E_o is nondimensional, being the product of the absorption coefficient, α, in units of yd^{-1} times the hydrophone depth, h, in yards. In order to convert αh in db per kiloyard into yd^{-1}, we have

$$yd^{-1} = 2.3 \times 10^{-4} db/ky.$$

Thus, for a hydrophone at 10 yards depth and at 10 kc (where $\alpha = 1$ *db* per kiloyard) αh equals 2.3×10^{-3}. Table 1 shows for convenience αh for a range of frequencies and depths.

TABLE 1

f kc	db/ky*	yd^{-1}	3 ft	30 ft	300 ft	3000 ft
0.5	2.5×10^{-3}	5.7×10^{-7}	<0.001	<0.001	<0.001	< 0.001
1.	0.01	2.3×10^{-6}	<0.001	<0.001	<0.001	0.0023
5.	0.25	0.57×10^{-4}	<0.001	<0.001	0.0057	0.057
10.	1.0	2.3×10^{-4}	<0.001	0.0023	0.023	0.23
50.	14.	3.2×10^{-3}	0.0032	0.032	0.32	3.2
100.	25.	$57. \times 10^{-3}$	0.0057	0.057	0.57	5.7

*Based on the expression $\dfrac{30 f^2}{3000 + f^2} + 2.5 \times 10^{-4} f^2$.

I_n, which is a function only of αh, is the total ambient noise intensity as measured by a nondirectional hydrophone when the surface radiates like $\cos^n\theta$, in units of the intensity at 1 yard vertically below an area of 1 square yard. Figure 2 shows a plot of 10 log I_n against αh for n = 0, 1, 2. For a given value of n, Figure 2 specifies the way in which ambient noise falls off with depth at constant frequency; or, at constant depth the way in which it falls off with increasing frequency - in terms of the intensity at one yard at that frequency. A study of the curves reveals that, in the range 0.001 to 0.5, a tenfold increase of depth produces a reduction of 7 db or less in noise level. At 50 kc, lowering a hydrophone from 3 to 300 feet reduces ambient noise by 7-1/2 db if n = 0; $3\frac{1}{2}$ *db* if n = 1; $2\frac{1}{2}$ *db* if n = 2. The change with depth is less than this at a frequency lower than 50 kc. The smallness of these values explains why no depth dependence of ambient noise has been reported in the literature; the effect of the bottom is to further reduce these values.

We may also be interested in the somewhat academic matter of the intensity of ambient noise radiation of a square yard of ocean surface. Figure 2, used in conjunction with ambient noise measurements at sea with a nondirectional hydrophone, enables this

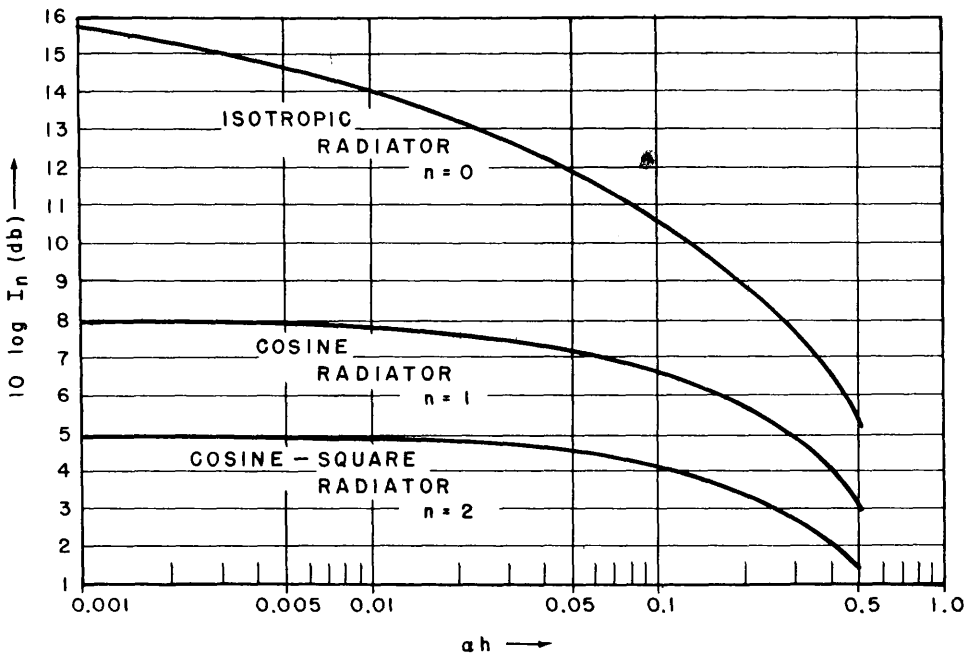

Figure 2 - Ambient noise: Ratio in *db* of total ambient intensity to the intensity produced by a one-square-yard surface at a distance of 1 yard vs. αh

quantity to be found. For example, at 10 kc and sea state 2, presently-accepted data[3] specify a pressure spectrum level of -55 *db* relative to one dyne per cm^2. Since, as shown in the previous paragraph, ambient noise must vary slightly with depth, let us assume that this figure results from measurements made at an average depth of 30 feet, and hence take (Table 1) $\alpha h = 0.0023$. Then we find from Figure 2 that $I_2\ (0.0023) = +5$ *db*, $I_1(0.0023) = +8$ *db*, $I_0(0.0023) = +15$ *db*. Then the intensity of ambient noise radiation, in the downward direction, of one square yard of ocean surface under these conditions is -55 -5 = -60 *db* if n = 2; -55 -8 = -63 *db* if n = 1; and -55 -15 = -70 *db* if n = 0. This assumes that the figure of -55 *db* is based on measurements actually made with, rather than corrected to, nondirectional hydrophones. The subject of the proper ambient noise directivity correction for a directional hydrophone will be considered later.

We may use Figure 2 to estimate the relative contribution of near and far surface areas to the total noise. Let us consider the noise coming from beyond a certain range, $r > h$. Its intensity is

$$I_n\ (\alpha r) = 2\pi\ (\alpha r)^n\ E_n\ (\alpha r).$$

Its ratio to the total noise at depth h is

$$\frac{I_n(\alpha r)}{I_n(\alpha h)} = \left(\frac{\alpha r}{\alpha h}\right)^n \frac{E_n(\alpha r)}{E_n(\alpha h)}\ .$$

[3] Principles and Applications of Underwater Sound, Summary Technical Report of Div. 6, NDRC, Vol. 7, p. 250, 1946

For a given value of αh this ratio can be computed easily from Figure 2. For the value $\alpha h = 0.005$ (which corresponds to a hydrophone depth of 220 yards at 3.3 kc, 22 yards at 10 kc, 4 yards at 25 kc, etc.), Figure 3 shows the ratio of intensities of noise coming from beyond range r to the total noise. For example, at 10 kc for a nondirectional hydrophone at depth 22 yards, we find that the noise coming from beyond 45 yards slant range, referred to 0-*db* total noise level, is 1/2 *db* less if n = 0; 3 less if n = 1; and 6*db* less if n = 2. The 3-*db*-down values of (αr) are 0.06, 0.0095, and 0.07 for n = 0, 1, 2. Thus, at 10 kc and hydrophone depth 22 yards we find that the noise from beyond $0.06/2.3 \times 10^{-4} = 260$ yards for n = 0 is of magnitude equal to that coming from inside 260 yards, for n = 1, the 3 *db* (down) range is 41 yards; and for n = 2, 30 yards. Qualitatively, we observe that the surface above and not too far away from a nondirectional hydrophone is most important in contributing to ambient noise at the higher frequencies and the higher values of n. Curves and results for values of αh other than 0.005 can be obtained from Figure 2.

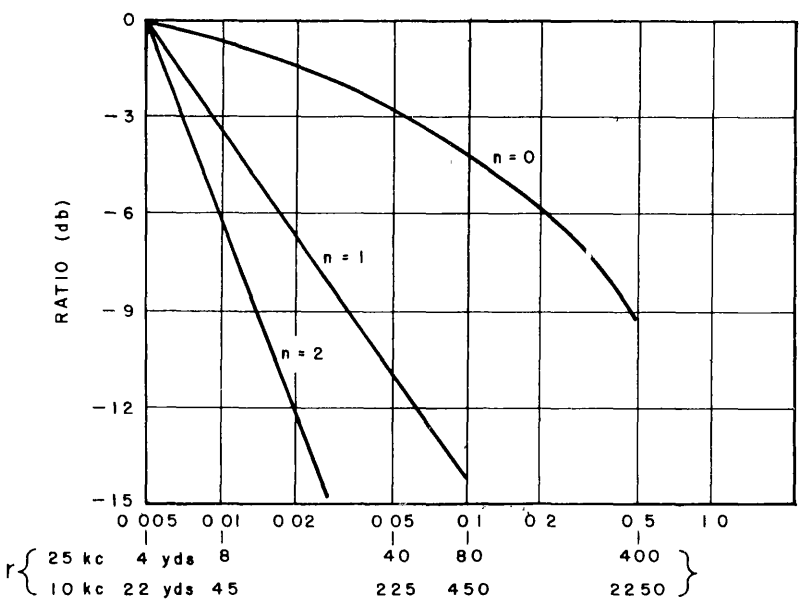

Figure 3 - Ratio of ambient noise coming from beyond range r to total ambient noise. Depth of isotropic hydrophone = 4 yards at 25 kc; 22 yards at 10 kc. $\alpha h = 0.005$

DIRECTIONAL HYDROPHONES

For a hydrophone whose response is a function of θ and φ, it is necessary to insert the appropriate function, $F(\theta, \varphi)$, into the general expression, and integrate. Even for ideal patterns, the resulting integrals can be evaluated only by approximate numerical methods. To obtain simpler expressions we shall adopt the subterfuge of considering a directional hydrophone to have a constant response of unity out to a certain angle θ_o from its axis, with zero response beyond. The limiting half-angles, θ_o, φ_o, will be shown to be simply related to the ordinary free-field directivity factor.

Vertical Line Hydrophone

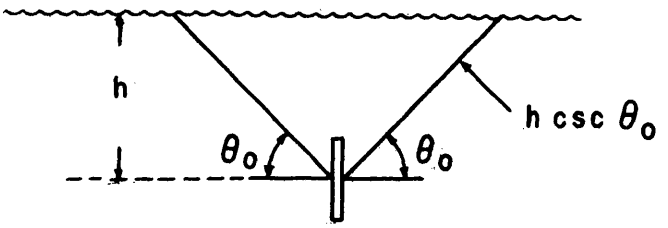

The vertical line hydrophone at depth h, with this simplifying assumption, will be sensitive to ambient noise only from beyond a range $h \csc\theta_o$, where θ_o is the vertical half-angle of unity response. Its ambient noise response will therefore be

$$2\pi \ (\alpha h)^n \ E_n(\alpha h \csc \theta_o) \ ,$$

and what may be termed its ambient noise directivity factor, j_a, or the ratio of its noise output to that of an equally sensitive nondirectional hydrophone, is

$$j_a = \frac{E_n \ (\alpha h \csc \theta_o)}{E_n \ (\alpha h)} \ .$$

If both $\alpha h \csc \theta_o$ and αh are substantially less than unity, and if, in addition, θ_o is small enough for $\csc \theta_o$ to be replaced by $1/\theta_o$, we find that on using a result previously derived, for n = 0

$$j_a = 1 + \frac{\log_e \theta_o}{E_o \ (\alpha h)} ,$$

and for n > 0

$$j_a = \theta_o^n \ .$$

The half angle θ_o can be related to δ, its directivity factor, as follows. Consider the hydrophone as a projector. If it radiates a power output of P watts, the intensity at 1 yard on its axis will be $P/4\pi\delta$. Let us find the angle $2\theta_o$ over which this intensity can be imagined to exist, keeping the total power radiated constant. At one yard, the area of a portion of a sphere of central angle $2\theta_o$ is

$$2\pi \int_{-\theta_o}^{\theta_o} \cos\theta \ d\theta = 4\pi \ \sin\theta_o = 4\pi\theta_o$$

for small values of θ_o. The intensity $P/4\pi\delta$ multiplied by this area must equal the radiated power P:

$$\frac{P}{4\pi\delta} \times 4\pi\theta_o = P.$$

For small θ_o,

$$\theta_o = \delta.$$

Example—Compute the ambient noise discrimination of a vertical line hydrophone 3 feet long at a depth of 20 feet at frequency 8 kc. For a 3-foot line hydrophone at 8 kc, 10 log $\delta = -10$ *db*; $\delta = \theta_o = 1/10$. At 8 kc $\alpha = 0.64$ *db* per ky $= 1.5 \times 10^{-4}$ yard^{-1}; $\alpha h = 1.5 \times 10^{-4} \times 6.6 = 0.001$; $\alpha h \csc \theta_o = 0.01$, and $\alpha h/\alpha h \csc \theta_o = 1/10$. The discrimination for n = 0, 1, 2 is then, from Figure 1,

$$n = 0;\ j_a = 10 \log \frac{E_o\ (0.01)}{E_o\,(0.001)} = 7 - 9 = -2db$$

$$n = 1;\ j_a = 10 \log \frac{E_1\ (0.01)}{E_1(0.001)} = 20 - 30 = -10db$$

$$n = 2;\ j_a = 10 \log \frac{E_2\ (0.01)}{E_2\,(0.001)} = 38 - 55 = -17db$$

Thus the ambient noise directivity factor, j_a, may be greater or less than the ordinary directivity factor, depending on how the surface radiates, and on the depth, frequency, etc. Better discrimination than for isotropic noise may be had if areas above the hydrophone contribute principally to the total noise. Poorer discrimination will exist when, because of a low frequency or a low value of n, much of the noise received comes from long ranges.

Horizontal Line Hydrophone

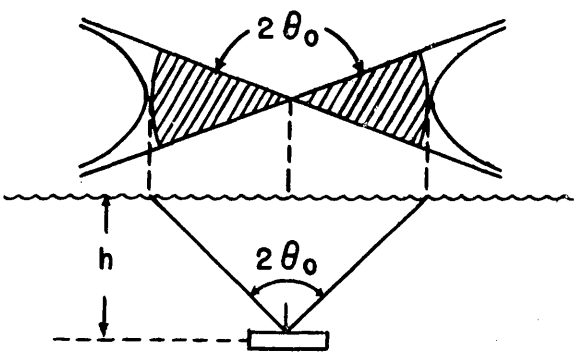

In this case, a line hydrophone lies horizontally at depth h below the surface. It is responsive only to sound coming from within a cone of angle $2\theta_o$, and will be affected only by surface noise sources lying within the two branches of a hyperbola with asymptotes intersecting at angle $2\theta_o$. The exact computation for this case is difficult. For simplicity, we shall assume that this area can be approximated by the area between the asymptotes, plus the area of the shaded circular sectors. The noise from the area between the asymptotes is

$$2 \cdot 2\theta_o\,(\alpha h)^n\, E_n\,(\alpha h).$$

The noise from the circular sectors is

$$2\ (\pi - 2\theta_o)\ (\alpha h)^n \left[E_n\,(\alpha h) - E_n\,(\alpha h \sec\theta_o)\right].$$

The sum of these two is the total noise response

$$2\pi\ (\alpha h)^n\, E_n\,(\alpha h) - 2\ (\pi - 2\theta_o)\ (\alpha h)^n\, E_n\,(\alpha h \sec\ \theta_o)$$

and the ratio to the response $2\pi\ (\alpha h)^n\, E_n\,(\alpha h)$ of a nondirectional hydrophone is

$$j_a = 1 - \frac{(\pi - 2\theta_o)\ E_n\,(\alpha h\ \sec\ \theta_o)}{\pi\ E_n\ (\alpha h)}.$$

For small values of θ_o, this becomes simply $2\theta_o/\pi$.

Example — Consider the same hydrophone, depth, and frequency as used in the preceding example, but with the hydrophone horizontal instead of vertical. Since θ_o = 1/10 radian, sec θ_o = 1.005 so that θ_o is sufficiently small for the last simple result to apply. Hence the ambient noise directivity factor is

$$j_a = \frac{2\,(1/10)}{3.14} = \frac{1}{15.7} = -12\ db \text{ for all values of n.}$$

On comparing this with the discrimination in the vertical position, we observe that if the surface is an isotropic radiator, (n = 0), the discrimination for this hydrophone is better in the horizontal position; but if the surface radiates preferentially downward the vertical orientation provides an equal or superior discrimination.

It is interesting to pursue this subject somewhat further, and inquire as to the comparison between the horizontal and vertical positions of any line hydrophone of high directivity, ($\theta_o \ll 1$), and at a low enough frequency and depth so that $h \csc \theta_o$ is still much less than unity. These restrictions, while apparently severe, still apply in many cases of sonar interest. The appropriate formulas have already been derived. Thus, for the horizontal orientation, we have found that with the above restrictions

$$j_a = \frac{2\theta_o}{\pi}\,.$$

For the vertical position it was found that for n = 0

$$j_a = 1 + \frac{\log_o \theta_o}{E_o(\alpha h)}\,,$$

and for other values of n

$$j_a = \theta_o^n\,.$$

Now a trial computation will show that for the vertical position with n = 0, j_a is only slightly less than unity. That is, a directive line hydrophone, subject to the above restrictions, has little discrimination against noise when in the vertical position if n = 0. Its discrimination, $2\theta_o/\pi$, in the horizontal position, is appreciably greater. If n = 2 or greater, however, the vertical position gives the better discrimination, since θ_o^n is smaller than $2\theta_o/\pi$. If n = 1, the interesting result is obtained that the two orientations are in the ratio of $2/\pi$; that is, the noise received in the horizontal position is only 2 *db* less than that in the vertical position. Both positions give about the same discrimination to ambient noise as they do to isotropic noise.

The British have made some experiments on this matter by arranging two long line hydrophones in deep water in the form of a T, one vertical and one horizontal, and comparing the ambient-noise intensities. They found no appreciable difference between the two positions, and concluded therefore that ambient noise is isotropic. Obviously however, a surface distribution of noise sources radiating in angle like the cosine of the angle with the vertical (n = 1) apparently gives substantially the same result.

Rectangular Piston Hydrophone

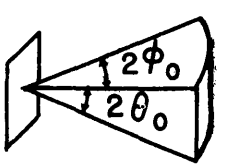

This will be idealized with the assumption of unity response within the vertical and horizontal half-angles, θ_o and φ_o respectively, centered about the axis, with zero response beyond.

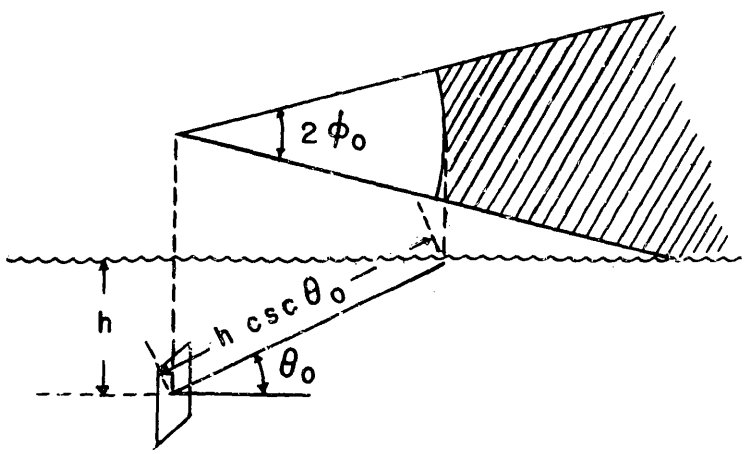

Then ambient noise is received only from the shaded sector, and the response of the hydrophone is

$$2\varphi_o \ (\alpha h)^n E_n \ (\alpha h \csc \theta_o)$$

and its ambient-noise directivity factor is

$$j_a = \frac{\varphi_o}{\pi} \frac{E_n \ (\alpha h \csc \theta_o)}{E_n(\alpha h)}$$

The relation between the angles θ_o and φ_o, and the ordinary directivity factor, δ, is obtained as follows. A projector radiating power P has intensity on its axis of $P/4\pi\delta$ at one yard. In the idealized beam this intensity applies over the area $4\varphi_o \ \sin \theta_o$ at one yard. Hence we have for small values of θ_o

$$P = \frac{P}{4\pi\delta} \cdot 4\varphi_o \ \sin \theta$$

or approximately,

$$\theta_o \varphi_o = \pi\delta .$$

For a square piston obviously

$$\varphi_o^2 = \theta_o^2 = \pi\delta.$$

If the transducer is given an upward tilt T, with $T < \theta_c$, we would have for the ambient noise directivity factor

$$\frac{\varphi_o}{\pi} \cdot \frac{E_n[\alpha h \csc (T + \theta_o)]}{E_n \ (\alpha h)}$$

if the effect of the bottom is neglected. If $T > \theta_o$ and upward tilt, its ambient noise directivity is, if T is not too large, approximately,

$$\frac{\varphi_o}{\pi} \left[\frac{E_n(\alpha h \ \csc \ (T + \theta_o)) - E_n(\alpha h \ \csc \ (T - \theta_o))}{E_n \ (\alpha h)} \right] .$$

Circular Piston (Searchlight) Hydrophone

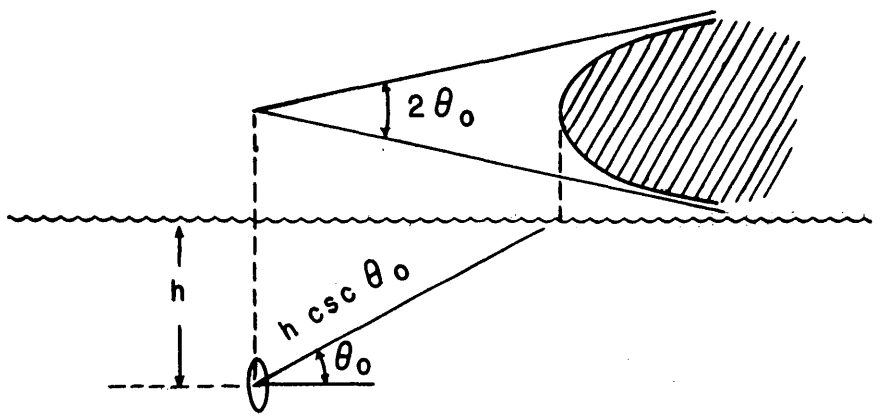

Again for simplicity it will be assumed that the hydrophone has unity response within the cone of opening $2\theta_o$. By the same process as used before for other hydrophones it can be shown that θ_o for a conical beam is related to the directional factor, δ, by the relation $1/2\ (1 - \cos\theta_o) = \delta$.

Now if this hydrophone has its axis horizontal, it will be sensitive only to surface noise sources lying beyond the branch of the hyperbola formed by the intersection of the surface and cone. The exact treatment of even this simplified case results in a complicated integral. Let us therefore take the additional liberty of replacing the circular hydrophone by a square hydrophone of the same directivity for isotropic noise. The equivalent angle θ_o for the square beam will then be given for small θ_o by

$$\theta_o^2 = \pi\delta$$

and the ambient noise directivity factor will be

$$j_a = \frac{\theta_o}{\pi} \quad \frac{E_n(\alpha h \csc\theta_o)}{E_n(\alpha h)} .$$

If this hydrophone is tilted upward by T degrees, expressions analogous to those for the rectangular hydrophone are obtained. A particularly simple case for the circular hydrophone is for a vertically upward tilt, i.e., $T = 90°$:

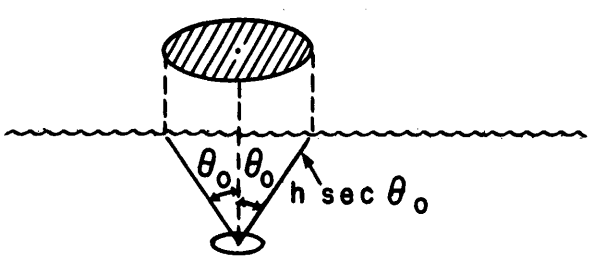

In this case its ambient noise response is

$$2\pi\ (\alpha h)^n\ [E_n(\alpha h) - E_n(\alpha h \sec \theta_o)]$$

and its ambient noise directivity factor is

$$1 - \frac{E_n(\alpha h \sec \theta_o)}{E_n(\alpha h)} .$$

Example — Depth Dependence of Ambient Noise, Searchlight Hydrophone — Given a searchlight hydrophone with axis horizontal having 10 log δ = -23 *db* at 10 kc. Find its ambient noise discrimination at a 30-foot and at a 300-foot depth.
$\theta_o^2 = \pi\delta = \pi/200$; $\theta_o = 0.125 = 7.2°$; 10 log $\theta_o/\pi = -14$ *db*; $h = 0.0023$ at 30 feet. Then the ambient noise directivity index is from Figure 1 at 30 feet,

$$n = 0; j_a = -14 + 5 - 8 = -17\ db$$

$$n = 1;\ j_a = -14 + 17 - 26 = -23\ db$$

$$n = 2;\ j_a\ -14 + 32 - 50 = -32\ db$$

If the depth be increased to 300 feet, so that $\alpha h = 0.023$, the results are

$$n = 0; j_a = -14 + 1 - 5 = -18\ db$$

$$n = 1; j_a = -14 + 5 - 17 = -26\ db$$

$$n = 2; j_a = -14 + 10 - 30 = -34\ db$$

Thus, there is only a slight improvement in noise discrimination at the greater depth, and this will be reduced somewhat by the presence of the bottom.

Bottom Reflection — With a sharp beam at downward tilt, it is necessary to consider bottom-reflected ambient noise even in deep water. With zero or upward tilts of a searchlight hydrophone in deep water, the bottom reflection is unimportant. But as the hydrophone is tilted downward, the surface area emitting sound decreases, although the surface area sending sound by way of the bottom becomes greater. In deep water, of depth D, it is sufficient to take into account once-reflected ambient noise if the absorption coefficient is appreciable. Then if $T > \theta_o$, the noise coming by reflection from the bottom is

$$\theta_o\ (\alpha(2D - h))^n E_n[\alpha(2D - h) \csc (\theta_o + T)]$$

and that, directly from the surface

$$\theta_o\ (\alpha h)^n E_n[\alpha h \csc (\theta_o - T)] .$$

The ratio of the sum of these to the response of a nondirectional hydrophone is its directivity factor for ambient noise, with the assumption, as before, that bottom-reflected noise for a nondirectional hydrophone is negligible in comparison to nonreflected noise. Figure 1 will show that bottom-reflected noise in deep water of the order of 2000 fathoms is small. In such deep water it is likely that side lobes pick up more noise directly from the surface than is received by the main beam with downward-tilt angles.

Dependence on Angle of Tilt — Given a conical beam hydrophone at 30 feet and 10 kc with 10 log $\delta = -23$ *db* and $\theta_o = 0.125$, as before. Figure 4 shows the ambient-noise directivity index plotted against tilt-angle, T, when computed from the approximate expressions

$$\frac{\theta_o}{\pi} \frac{E_n\,[\alpha h \csc\,(T+\theta_o)] - E_n\,[\alpha h \csc\,(T-\theta_o)]}{E_n(\alpha h)}$$

for $T > \theta_o$, and from

$$\frac{\theta_o}{\pi} \frac{E_n\,[\alpha h \csc\,(T+\theta_o)]}{E_n(\alpha h)}$$

for $T < \theta_o$.

For large tilt angles, the first expression is not considered reliable; and no points were computed in Figure 4 between $T = 40°$ and $T = 90°$. For $T = 90°$ upward, the ambient-noise directivity factor is given by the expression on page 13

$$j_a = 1 - \frac{E_n\,(\alpha h \sec \theta_o)}{E_n(\alpha h)}$$

$$= 1 - \frac{E_n\,(\alpha h\,(1 + \theta_o^2/2))}{E_n(\alpha h)}$$

For small θ_o, this quantity is very difficult to read from Figure 1. However, by differentiation it can be shown that for $\beta \ll x$,

$$\frac{E_n\,(x+\beta)}{E_n\,(x)} = 1 - \frac{\beta}{x^{n+1}\,E_n\,(x)}.$$

Usually, the practical cases of interest occur for $x \ll 1$. For such cases we have

$$n = 0;\ \frac{E_o(x+\beta)}{E_o(x)} = 1 - \frac{\beta}{x\,E_o(x)}$$

$$n > 0;\ \frac{E_n(x+\beta)}{E_n(x)} = 1 - \frac{n\beta}{x}$$

on using the approximation, valid for $x \ll 1$, that

$$E_n\,(x) = \frac{x^{-n}}{n}.$$

In the present example $\beta \equiv \frac{\alpha h \theta^2}{2}$, $x \equiv \alpha h$. Therefore

$$n = 0;\ j_a = \theta_o^2/2\,E_o(\alpha h)$$

$$n > 0;\ j_a = \frac{n\theta_o^2}{2}.$$

Using $\theta_o = 0.125$ and $h = 0.0023$ we find that

$$n = 0;\ 10 \log j_a = -29\ db$$

$$n = 1;\ 10 \log j_a = -21\ db$$

$$n = 2;\ 10 \log j_a = -18\ db.$$

For downward tilts greater than θ_o, only bottom-reflected noise is received; its value is extremely small and, for a practical hydrophone, likely to be exceeded by directly-received surface noise coming from side lobes, etc., outside of the idealized beam. As the axis of the hydrophone is raised above a downward tilt of 7.2°, noise from more and more of the surface is received, until, when the tilt is upward by 7.2°, the hydrophone receives sound from a maximum area of surface. This results in a maximum of noise pickup if n = 0. If the tilt is increased further, the noise reception decreases if n = 0, remains practically constant if n = 1, and increases somewhat if n = 2.

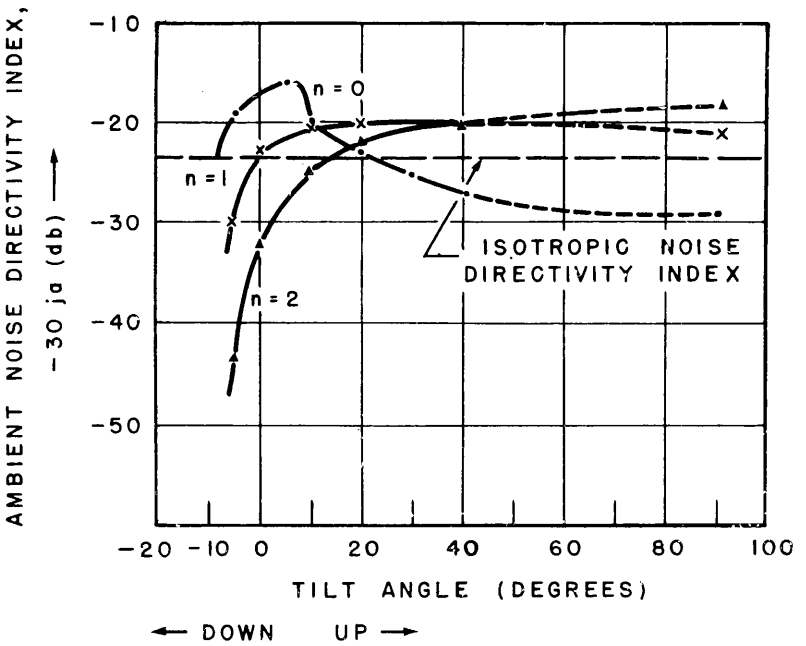

Figure 4 - Variation of j_a with tilt angle for an idealized piston hydrophone with $\theta_0 = 7.2^\circ$ and $\alpha h = 0.0023$ (10 kc at 30 ft)

It will be noticed from Figure 4 that j_a can be either greater or less than the isotropic-noise directivity factor, depending on tilt angle and the radiation pattern of the surface.

CONCLUSIONS

It is apparent from the foregoing that the assumption ordinarily made, that ambient noise is isotropic, is unfounded. As a result of the surface distribution of noise sources, the discrimination of a directional hydrophone against ambient noise may be better or worse than for isotropic noise. The foregoing expressions allow this discrimination to be roughly estimated if certain simplifying assumptions as to beam pattern, etc., be granted.

It is also apparent that we can hardly even guess as to this discrimination until something is known about the radiation pattern of the surface. At this time one can do little more than guess as to the true value of n. The British experiments mentioned seem to show that—at least at 19 kc and for low sea states—n equals 1 for practical purposes. This value of n has also some intuitive appeal because of the fact that black-body radiation of heat and light similarly decreases like the first power of the cosine of the angle with the normal. At any rate, the determination of n, and its dependence on such things as sea state, frequency, and wind directions, are at present research problems of prime importance.

* * *