NRL REPORT C-3405

PILOT PLANT PREPARATION OF DIBORANE

H. W. Carhart, R. H. Blizzard, J. E. Johnson,
J. A. Krynitsky and S. H. Smith, Jr.

January 17, 1949

Approved by:

Mr. R. R. Miller, Head, Physical and Inorganic Section
Dr. P. Borgstrom, Superintendent, Chemistry Division

NAVAL RESEARCH LABORATORY
CAPTAIN H. A. SCHADE, USN, DIRECTOR
WASHINGTON, D.C.

APPROVED FOR PUBLIC
RELEASE - DISTRIBUTION
UNLIMITED

DISTRIBUTION

ONR	
Attn: Code N-482	(2)
BuAer	
Attn: Code TD-4	(2)
Dir., USNEL	(2)
Cdr., USNOTS	
Attn: Reports Unit	(2)
U. S. Atomic Energy Commission	
Attn: Mr. B. M. Fry, Library	(3)
Mine Safety Appliances Company	
Attn: Dr. C. B. Jackson	(2)
RDB	
Attn: Library	(2)
Attn: Navy Secretary	(1)
Science and Technology Project	
Attn: Mr. J. H. Heald	(2)

CONTENTS

Abstract	iv
Problem Status	iv
Authorization	iv
INTRODUCTION	1
APPARATUS	1
MATERIALS	1
PROCEDURE	6
RESULTS	7
PRECAUTIONS	7
MISHAPS	9

ABSTRACT

A pilot plant comprising three independent production units was constructed for the preparation of diborane according to the following equation:

$$3\ LiBH_4 + BF_3 \cdot (C_2H_5)_2O \xrightarrow{ether} 2\ B_2H_6 + 3\ LiF + (C_2H_5)_2O$$

A total of 4.2 Kg of diborane of about 95 percent purity was prepared in forty-seven runs with an over-all yield of 90.9 percent based on the lithium borohydride. A production unit was essentially all glass and consisted of a reactor connected to suitable cold traps for purification and transfer of the product. The reaction was carried out under an inert atmosphere and transfers to storage bombs were made at reduced pressure.

PROBLEM STATUS

This is a final report on one phase of this problem; work is continuing on the problem.

AUTHORIZATION

NRL Problem No. C01-07R (BuAer Problem TED NRL 3401).

PILOT PLANT PREPARATION OF DIBORANE

INTRODUCTION

The primary purpose of this project was to prepare a sufficient quantity of diborane to meet the urgent demand by various cooperating groups studying the properties of this compound.

Several laboratory methods were available for the preparation of diborane but, prior to this work, none had ever been used to prepare more than a few grams at a time. Having considered these methods and the materials available, it was decided that the reaction discovered by H. I. Schlesinger[1] given below be scaled-up for the preparation of larger quantities.

$$3\ LiBH_4 + BF_3 \cdot (C_2H_5)_2O \xrightarrow{ether} 2\ B_2H_6 + 3\ LiF + (C_2H_5)_2O$$

APPARATUS

Three independent production units for the preparation of diborane were constructed, each housed in a booth open at one end measuring 10'9" long by 7'3" wide by 8" high. Each booth was individually ventilated by two exhaust fans and was equipped with suitable outlets for water, gas, electricity, dry nitrogen, and vacuum.

A schematic diagram of the apparatus used is shown in Figure 1. Details of the reactor (A of Figure 1) are given in Figure 2, the receiver bomb is shown in Figure 3, and the transfer assembly in Figure 4. Except for the mercury seals and the receiver bomb, the major portion of the apparatus is made of Pyrex glass.

MATERIALS

Dry Nitrogen - Dry oxygen-free nitrogen was obtained by passing oil-pumped tank nitrogen through a heated copper deoxidizer and a drying tower.

---

[1] At University of Chicago under Navy Contract N173s-9820 (BuAer TED NRL 3401)

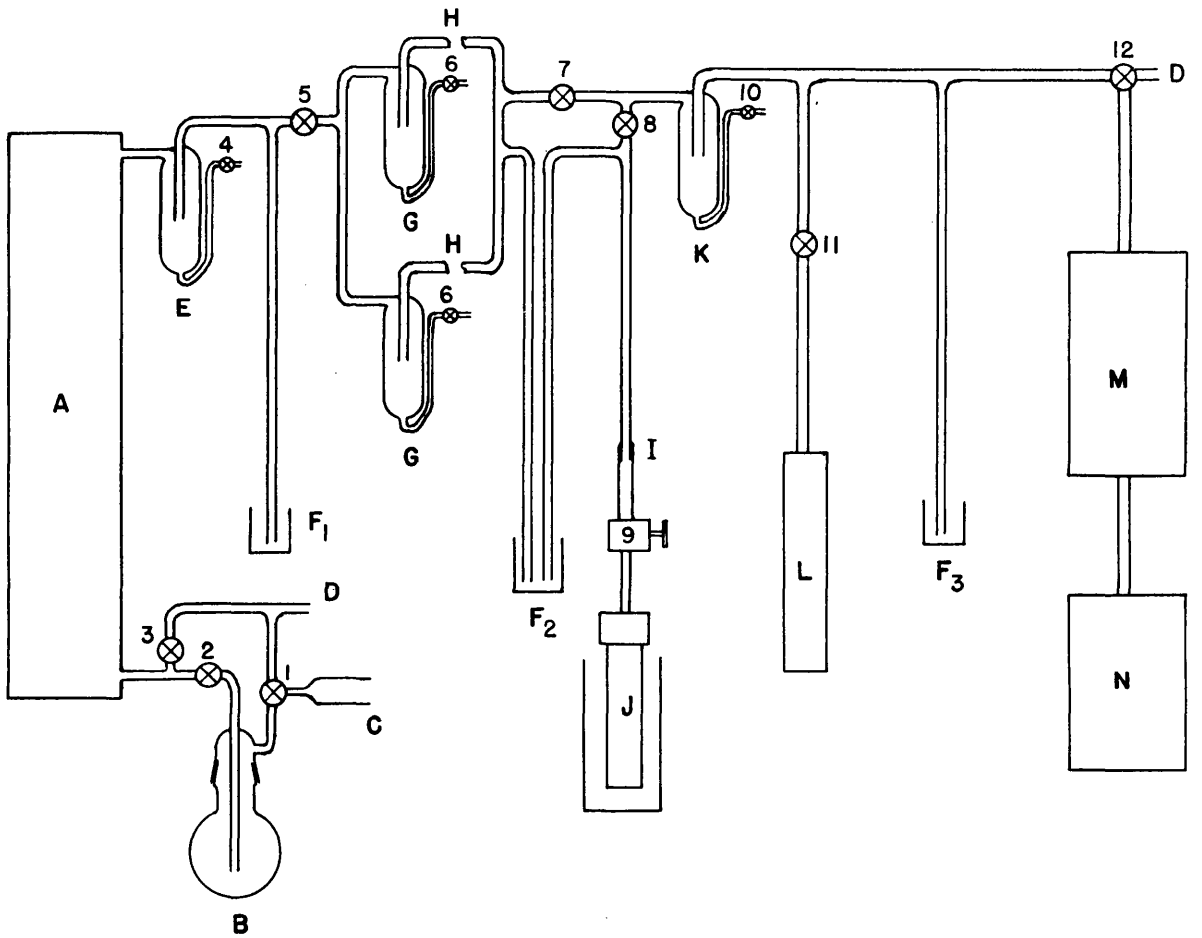

Figure 1 - Schematic Diagram of Pilot Plant

A. Reactor

B. Settling flash (5 liters, pyrex. The inlet tube extends slightly below the mid-point of the flask)

C. Drying tube

D. Inlet for dry nitrogen

E. Condensing trap

F_1. Mercury trap

F_2. Mercury trap

F_3. Mercury trap

G. Collection traps (capacity 550 ml each)

H. Second set of collection traps the same as G

I. Glass-to-metal coupling

J. Receiver bomb

K. Trap

L. McLeod gage

M. Mercury vapor pump

N. Mechanical vacuum pump

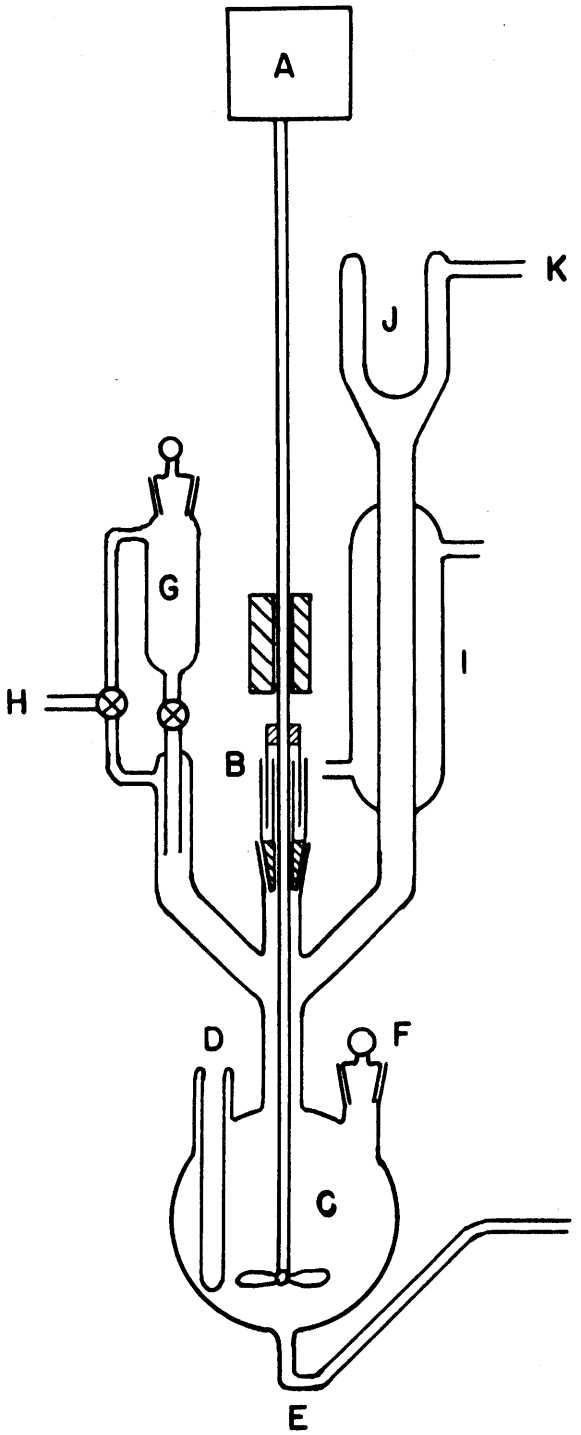

Figure 2 - Detail of Reactor

A. Stirring motor

B. Mercury seal (8" long overall, made of brass and stainless steel tubing)

C. Reaction flask (5 liters, pyrex)

D. Thermometer well

E. Connector to settling flask and dry nitrogen inlet

F. Loading port

G. Dropping funnel (250 ml)

H. Dry nitrogen inlet

I. Water cooled condenser

J. Dry Ice cooled condenser

K. Connector to remainder of system

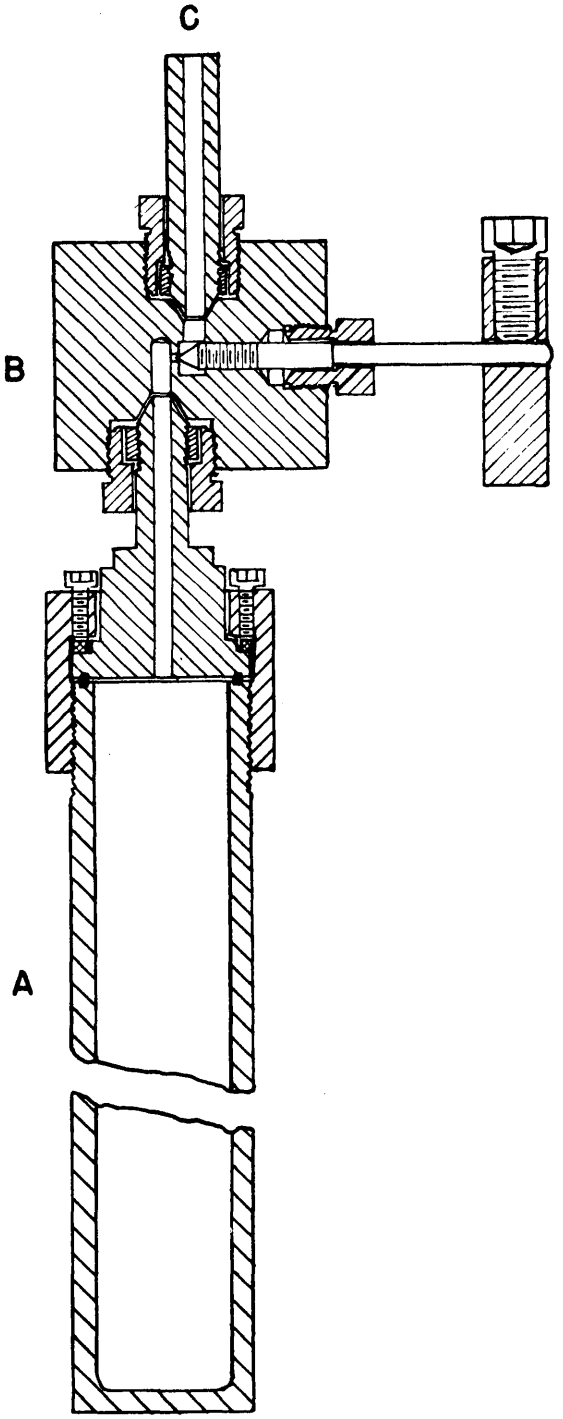

Figure 3 - Detail of Receiver Bomb

A. Stainless steel bomb (2" I.D., 20" depth, 3/8" wall thickness, volume 1030 ml. Maximum capacity for liquid diborane about 150 g at its critical temperature)

B. High pressure valve

C. Connector

Figure 4 - Transfer assembly

A. Receiver bomb (Detailed in Figure 3)

B. High pressure valve

C. Manifold

D. Low pressure valve connection to vacuum line

F. Connection to center tube of bomb for liquid take-off

F. Dual high pressure valve

G. Storage bomb (Volume of approx. 6,300 ml, used to store up to 950 g diborane)

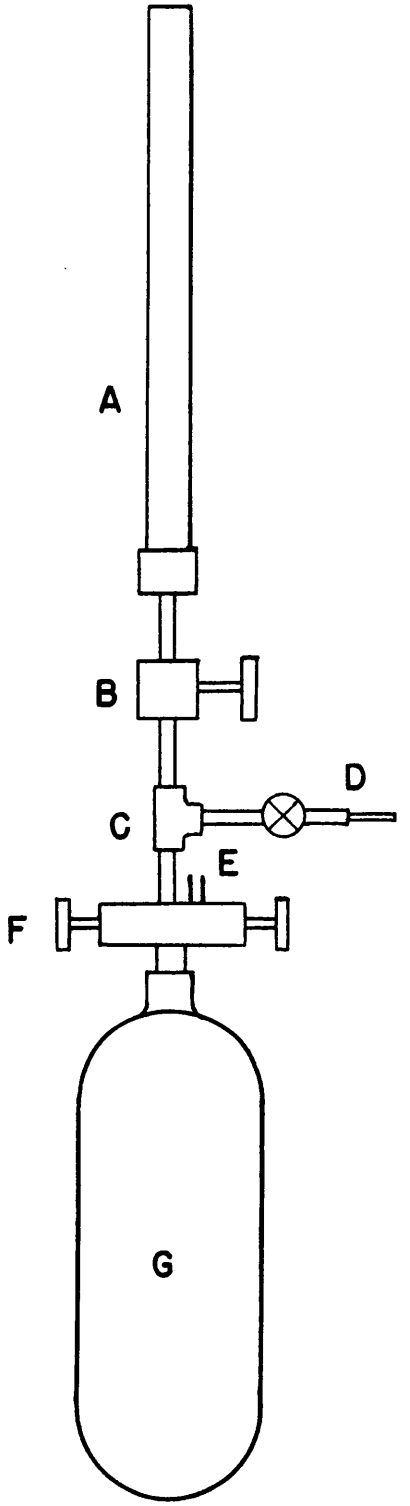

Dry Ether - The ether used was rendered water and alcohol free by treatment with metallic sodium followed by distillation. The ether thus prepared was stored over sodium wire.

Boron trifluoride-Etherate - The boron trifluoride-etherate was prepared by saturating dry ethyl ether with gaseous boron trifluoride at atmospheric pressure. The material thus prepared had a composition approaching $BF_3 \cdot (C_2H_5)_2O$ and contained approximately 53 g of BF_3 per 100 ml.

Lithium Borohydride - The lithium borohydride was obtained from the Lithaloy Corporation and analyzed approximately 95 percent.

Stopcock Lubricants - Joints exposed to ether were lubricated with a silicone grease. Other joints were lubricated with Apiezon "N" vacuum grease.

PROCEDURE

Preparation of Diborane - The complete system was flushed with dry nitrogen. Condenser J (Figure 2) and traps E and G (Figure 1) were cooled, E and J with dry ice acetone mixture and G with liquid nitrogen. Traps E and G were immersed in Dewar flasks containing coolant and condenser J was filled with the coolant. Stopcock 7 was closed and the nitrogen was shut off. The lithium borohydride was introduced into the reaction flask through port F (Figure 2) and the joints and stopcocks of the reactor were secured with rubber bands. After starting the agitator, approximately 2½ liters of ether was added. A slow stream of dry nitrogen was bubbled through the mixture in the reactor (through E of Figure 2) and vented through F_2. A slight excess over the theoretical amount of boron trifluoride-etherate was then added from G (Figure 2) dropwise over a period of 30 to 60 minutes. During this time the diborane was evolved and collected as a solid in traps G. Upon completion of this addition, the reactor was heated with a pair of infrared lamps to bring the ether to reflux (10 to 15 minutes required) so as to aid in the removal of the diborane from the ether.

Transfer of Diborane to Receiver Bomb - With stopcock 5 closed and stopcock 7 and valve 9 open, the system was evacuated to the order of 10^{-2} mm. The receiver bomb was cooled with liquid nitrogen and traps G were allowed to warm by removing the cooling baths. Upon completion of the transfer of the diborane (distillation required 30 to 45 minutes), valve 9 was closed and the system between stopcocks 5 and 12 was flushed with dry nitrogen. The yield of diborane was obtained from the increase in weight of the receiver bomb. Percentage yields were based on the starting quantities of lithium borohydride.

Transfer of Diborane to Storage Bomb - The receiver bomb was attached to the storage bomb as shown in Figure 4. The storage bomb was cooled in dry ice and evacuated through D. With D closed, the contents of the receiver bomb were transferred to the storage bomb by opening valve B and allowing A to warm. Further additions to the storage bomb were made in a similar manner except that manifold C only was evacuated prior to material transfer. Bombs containing diborane were stored in dry ice at all times.

Ether Recovery and Disposal of Reaction By-products - After a run, the contents of the reaction flask C (Figure 2) were transferred to the settling flask B (Figure 1) by applying a gentle suction through drying tube C. The solids were allowed to settle and the supernatant ether was blown back, by dry nitrogen, into the reaction flask for the subsequent run. When the level of the settled solids reached the center tube of the settling flask (after 4 to 5 runs), the flask was disconnected and the contents discarded.

RESULTS

During the period 10 February 1947 through 7 March 1947, forty-seven preparations of diborane were carried out and a total of 4.2 Kg was prepared. The average yield of diborane was 90.9 percent of theoretical (based on $LiBH_4$ used) and was about 95 percent pure. Detailed data for these preparations are given in Table I.

PRECAUTIONS

(a) Each booth was equipped with two 16" ventilator fans. These fans were placed on the back wall just above the reactor so that a continuous sweep of air was maintained across the apparatus and away from the operator. With this ventilating system, the concentration of diborane in the air could not build up so as to constitute either a physiological or explosive hazard, even when leaks occurred.

(b) As an emergency measure for personnel fire protection, a shower capable of spraying from several directions and activated by a treadle was placed just outside the booths. Portable carbon dioxide fire extinguishers were located at the entrance to each booth and a large capacity carbon dioxide fire extinguisher was also available.

(c) Safety goggles were worn by the operators and rubber gloves were used during the handling of the lithium borohydride.

(d) The lithium borohydride was weighed out and stored in a dry room.

(e) Liquid nitrogen, rather than liquid air, was used as the coolant for condensing diborane so as to minimize danger should a container break.

(f) Bombs containing diborane were always stored in an insulated chest containing dry ice to prevent pressure build-up in the bomb and possible thermal decomposition.

(g) The packings in the high pressure valves on the bombs were replaced by Teflon. Some difficulty was experienced with leakage of these valves after repeated use. This was probably due to deposition of boric oxide on the valve seat. A periodic cleaning of the valves eliminated much of this trouble.

TABLE I

Resumé of Diborane Preparations

Date	Run No.	Wt. of $LiBH_4$ (g)	$BF_3 \cdot Et_2O$ (ml)	Wt. of B_2H_6 (g)	Percent Yield
2/10/47	1	92	189	75	96
2/12/47	2	101	215	50	*
2/13/47	3	105	216	85	96
2/14/47	4	87	175	60	80
2/17/47	5	166	340	130	91
2/18/47	6	169	350	121	84
2/19/47	7	67	145	50	88
2/20/47	8	157	320	115	87
2/20/47	9	101	207	84	99
2/21/47	10	94	192	70	80
2/24/47	11	121	248	94	91
2/24/47	12	124	253	96	91
2/25/47	13	124	253	91	86
2/25/47	14	119	243	95	94
2/25/47	15	117	239	98	99
2/26/47	16	122	249	93	90
2/26/47	17	118	241	95	95
2/26/47	18	123	251	98	94
2/27/47	19	117	242	90	91
2/27/47	20	118	243	92	92
2/27/47	21	115	235	90	92
2/27/47	22	130	265	107	97
2/28/47	23	118	241	90	90
2/28/47	24	119	243	94	93
2/28/47	25	115	237	90	92
3/3/47	26	120	245	96	94
3/3/47	27	118	241	62	+
3/3/47	28	125	250	100	94
3/3/47	29	130	260	111	100
3/4/47	30	120	240	91	89
3/4/47	31	120	240	79	+
3/4/47	32	120	230	90	88
3/4/47	33	120	240	53	+
3/5/47	34	120	230	91	89
3/5/47	35	120	230	91	89
3/5/47	36	120	230	86	84
3/5/47	37	120	230	89	87
3/6/47	38	120	230	88	86
3/6/47	39	120	230	90	88
3/6/47	40	120	230	87	85
3/6/47	41	120	230	100	98

TABLE I (Cont.)

Date	Run No.	Wt. of $LiBH_4$ (g)	BF_3 Et_2O (ml)	Wt. of B_2H_6 (g)	Percent Yield
3/6/47	42	120	240	85	83
3/7/47	43	120	230	90	88
3/7/47	44	115	230	93	95
3/7/47	45	120	234	93	91
3/7/47	46	120	230	85	83
3/7/47	47	120	230	88	86
TOTAL		5587	11,212	4191	90.9**Ave.

* Reactor broke
\+ Leak in receiver bomb valve
** Excluding runs No. 2, 27, 31 and 33

MISHAPS

No serious accidents occurred during the operation of the pilot plant. In the forty-seven runs made, two minor explosions occurred. Both of these took place at mercury trap F_2 (Figure 1) during the nitrogen sweep-out of the system at the conclusion of a run. In neither case was anything broken.

One fire was experienced when a reactor broke during a run. This was extinguished quickly with a carbon dioxide fire extinguisher.

***

PRNC-9526-2-26-49-150