NRL REPORT M-3390

SOME OBSERVATIONS ON UNDERBEAD CRACKING IN WELDING OF HIGH-TENSILE LOW-ALLOY STEEL

J. A. Rinebolt and J. O. Mack

March 14, 1949

Approved by:

Dr. O. T. Marzke, Superintendent, Metallurgy Division

NAVAL RESEARCH LABORATORY
CAPTAIN F. R. FURTH, USN, DIRECTOR
WASHINGTON, D.C.

APPROVED FOR PUBLIC
RELEASE - DISTRIBUTION
UNLIMITED

DISTRIBUTION

BuShips Attn: Code 434 Attn: Code 692	(5)
BuAer Attn: Code TD-4	(2)
BuOrd	(2)
ONR Attn: Code 482	(2)
Cdr., Boston Naval Shipyard	(2)
Cdr., Brooklyn Naval Shipyard	(2)
Cdr., Charleston Naval Shipyard	(2)
Cdr., Pearl Harbor Naval Shipyard	(2)
Cdr., Long Beach Naval Shipyard	(2)
Cdr., Mare Island Naval Shipyard	(2)
Cdr., Norfolk Naval Shipyard	(2)
Cdr., Philadelphia Naval Shipyard	(2)
Cdr., Portsmouth Naval Shipyard	(2)
Cdr., Puget Sound Naval Shipyard	(2)
Cdr., San Francisco Naval Shipyard	(2)
Dir., USNEL	(2)
Cdr., USNOTS Attn: Reports Unit	(2)
Dir., USNEES, Annapolis, Md.	(1)
Dir., USNML, Munhall, Pa.	(1)
Cdr., USNOL, Silver Spring, Md.	(1)

Supt., USNGF, Wash., D. C.	(1)
Dir., NBS, Wash., D. C.	(1)
CO, NTS, Newport, R. I.	(1)
OCSigO Attn: Ch. Eng. & Tech. Div., SIGTM-S	(1)
CO, SCEL Attn: Dir. of Engineering	(2)
BAGR, CD, Wright-Patterson Air Force Base Attn: BAU-ADD	(1)
RDB Attn: Library Attn: Navy Secretary	 (2) (1)
Science and Technology Project Attn: Mr. J. H. Heald	(2)

This page intentionally left blank.

CONTENTS

Abstract	vi
Problem Status	vi
Authorization	vi
STATEMENT OF PROBLEM	1
BACKGROUND INFORMATION	1
MATERIALS TESTED	2
DEVELOPMENT OF UNDERBEAD CRACKING TESTS	2
EFFECT OF PROPERTIES OF BASE METAL	9
Chemical Composition	9
Tensile Strength and Hardness	11
Plate Thickness	12
EFFECT OF WELDING CONDITIONS	12
Heat Input	12
Preheat Temperature and Heat-Affected Zone Hardness	14
Type of Electrode	15
SUMMARY AND CONCLUSIONS	16
ACKNOWLEDGMENT	16
REFERENCES	27

ABSTRACT

The object of this investigation was to develop a satisfactory test for measuring underbead weld cracking and to determine some of the important factors which influence underbead cracking in high-tensile steels. A new test specimen and a new procedure have been developed which quantitatively measure such cracking. The specimen can be easily prepared and examined, and can be made under conditions closely simulating those in production welding.

The twelve commercial steels used in this investigation were found to range in cracking tendency from 0 to 76 percent. It was found that cracking increases with thickness up to about one inch, and then decreases with further increase in thickness. Cracking also increases with increase of carbon and manganese. No correlation was observed between cracking and tensile strength, plate hardness, and heat input within the welding range used. The preheating temperature required to eliminate cracking was found to vary from one heat of steel to another. The use of low-hydrogen, covered electrodes reduced cracking to less than one percent in the most crack-sensitive steel.

PROBLEM STATUS

This report concludes the work on this problem. Unless otherwise advised by the Bureau, the Laboratory will consider the problem closed one month from the mailing date of this report.

AUTHORIZATION

This problem was authorized by BuShips letter QP/W&C-(4)-(2)(334-692) dated April 4, 1944. NRL Problem M03-12D.

SOME OBSERVATIONS ON UNDERBEAD CRACKING IN WELDING OF HIGH-TENSILE LOW-ALLOY STEEL

STATEMENT OF PROBLEM

The welding of high-tensile steels often results in the formation of cracks in the heat-affected zone under the bead of a weld. These cracks are generally referred to as underbead cracks. This report describes (a) a test for the detection and measuring of underbead cracks, and (b) the effects of chemical and physical properties and welding conditions upon the formation of the cracks.

BACKGROUND INFORMATION

Welding literature contains extensive references to underbead cracking. These may be divided into three categories:

1. Descriptions of tests for detecting the presence of cracking.
2. Theories as to the causes of cracking.
3. Proposals for eliminating cracking.

A number of test methods have been proposed for determining the susceptibility of a steel to underbead cracking. Historically, the first test was described by Crawford and Carr*[1] and Roberts[2] and was introduced to determine the cracking tendency of cast steels. This test consisted of filling a hole 1″ in diameter and 2″ deep with weld metal, sectioning longitudinally through the weld metal, polishing, and determining the amount of cracking by magnetic powder methods. Another early test, the Reeve test,[3] consisted of bolting to a base plate two plates of the steel being tested, one of which was at least an inch larger than the other in all directions. The smaller plate of steel was attached to the larger by means of fillet welding on three sides. The test fillet was made on the fourth side and because of the restriction tended to crack. Steels were classified as good or poor depending upon the presence or absence of cracks when examined visually. Wilkinson and O'Neill[4] modified and improved the Reeve test by making it less severe and by establishing a more suitable index for evaluating the degree of cracking. The circular bead test of Voldrich and Williams[5] consisted of depositing a circular bead $1\frac{1}{2}$″ in diameter with a small electrode at a high welding speed, removing the bead by surface grinding until flush with the plate, and then magnafluxing. The maximum crack length was used as a means for classifying steels. The test is limited to plates 1/4″ thick or less. In another test developed by Voldrich et al[16] a stringer bead was used and the presence of cracks was determined by the use of magnetic powder inspection methods and the impressions of the cracks

* A reference list will be found at the end of this report.

recorded on cellulosic tape. The percent of cracking was determined by dividing the total length of cracking by the length of the weld.

Several different theories have been suggested for the formation of cracks in the heat-affected zone of a weld. All investigators[6] agree that the cracking starts in the martensitic zone within one or two crystal diameters of the fusion line, but they do not agree as to the cause. Several investigators[7,8,9,10,11,12] believe the effect is due to hydrogen. According to their theory, when moisture or materials containing hydrogen are present in the electrode coating or in the atmosphere during welding, atomic hydrogen formed in the arc is dissolved by the molten weld metal to the limit of its solubility. During the welding process, the base metal is heated above its transformation temperature and hydrogen diffuses into it also. When this metal cools, it transforms and the hydrogen that does not diffuse out into the air precipitates at the grain boundaries or other discontinuities as molecular hydrogen, building up enormous aerostatic pressures which cause rupture of the metal. These cracks are very small but because of the stresses present tend to propagate. According to Gibson and Hodge[11] and Zvegintsev[12] hydrogen tends only to propagate cracks already formed by other means such as the action of localized stresses occurring between component parts of the microstructure while going through the transformation. Another theory, proposed by Jackson[13] states that the differences in the dilation characteristics of the base metal and weld metal may produce sufficient stresses to cause small cracks in the heat-affected zone.

Several different methods for eliminating underbead cracking have been reported. Eilender and Pribyl[14] stated that removal of ferritic banding will lower the crack sensitivity of a steel and that it is possible to produce unbanded steels either by overheating the melt 200 to 300° C, or by special deoxidizing materials and processes. Jackson[13] reported that balancing the dilation characteristics of the base metal and weld metal, thus lowering the stresses in the weldment, would tend to eliminate cracking. Rollason[15] found that cracking could be eliminated by the use of thermal treatments. He recommended both a preheat and a postheat for steels that hardened readily when cooled from elevated temperatures. Herres[9] stated that root cracks are prevented when a mineral coated electrode is used, thereby eliminating the effect of hydrogen.

MATERIALS TESTED

Twelve different steels were used in this investigation (Tables 1 and 2).† Ten were high-tensile steels supplied by five producers of Navy high-tensile steels. The other two were a plain carbon Navy Grade M mild steel and a steel containing 1.7% nickel.

The standard electrodes used were 1/8" diameter AWS E6010, Navy Grade 1, Class 1. Other electrodes of different types such as AWS E6013, E7020, E7030, E10012, low-hydrogen, and experimental were used to evaluate their underbead cracking characteristics.

DEVELOPMENT OF UNDERBEAD CRACKING TESTS

While it is desirable to have test procedures duplicate service conditions, as closely as possible, it is also desirable to have the specimen as simple as possible, so as to reduce testing expenses and to eliminate variables. To determine the possibility of using the simple stringer bead, a test was devised for comparing the qualities of fillet and stringer-bead welds made under identical conditions. The test required one large plate and two small ones (Figure 1) with the face of the large plate (horizontal) and the mating side (edge) of each

† All tables will be found at the end of this report.

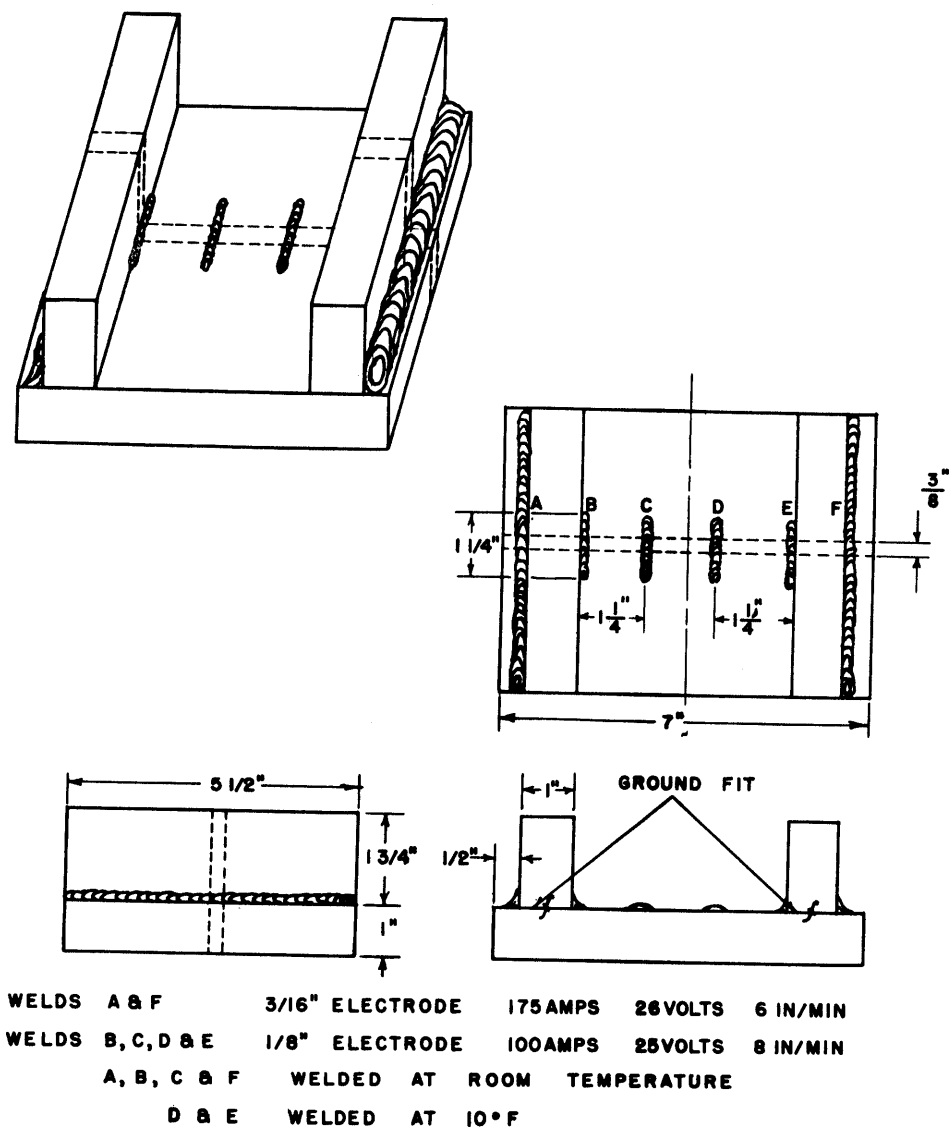

Fig. 1 - Sketch of Underweld Cracking Specimen

of the two small ones surface ground. Before welding the small plates were clamped to the large plate in order to minimize distortion upon cooling. The welding procedure consisted of welding the outer fillets, A and F, (Figure 1), allowing the specimen to return to room temperature, cooling to 10°F in a bath of carbon tetrachloride and dry ice for a sufficient time to cool throughout, and then depositing a 1 1/4" fillet in position E. After repeating the cooling procedure a stringer bead weld of similar length was made in position D. A fillet weld and a stringer bead in positions B and C were then welded using the same technique at room temperature (70° F). Welds were made at 10° F as well as at room temperature because of the known effect of temperature of welding in the performance of weldments.

The four small welds were aligned in order that two saw cuts would section all four welds. All welding was carried out using a 1/8″ diameter AWS E6010 electrode at 100 amperes, 25 volts, and 8″ per minute travel.

The results from several such specimens of various high-tensile steels showed no detectable difference between the amount of underbead cracking in the two types of welds. Consequently, the program was carried out using the much simpler bead-on-plate as the test weldment.

The first stringer bead test (Figure 2) consisted of laying a stringer bead along the centerline of the surface of a plate 3″ x 4″ plate thickness and sawing transversely across the bead. The side toward the start of the weld was then polished and examined microscopically at 100 diameters for underbead cracking. The amount of cracking was classified according to the following key: "OK" no visible cracks, "X" only one small crack, "XX" one large crack, and "XXX" several cracks both large and small (Figure 3). This simple qualitative test served very satisfactorily for comparing steels not very similar in cracking tendencies. A more quantitative measure was obtained by measuring the cracks at 100 diameters by means of the micrometer stage of a Vickers hardness tester and reporting the amount of cracking in percent as determined by dividing the total length of all cracks by the length of the weld.

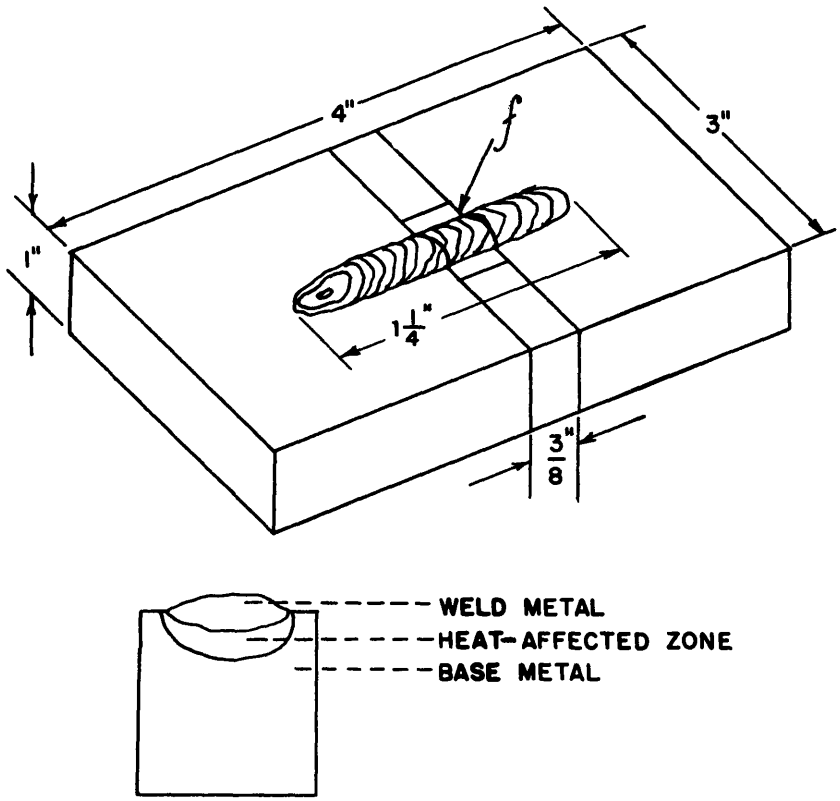

Fig. 2 - Sketch of Transverse Underbead Cracking Specimen

NO CRACKING

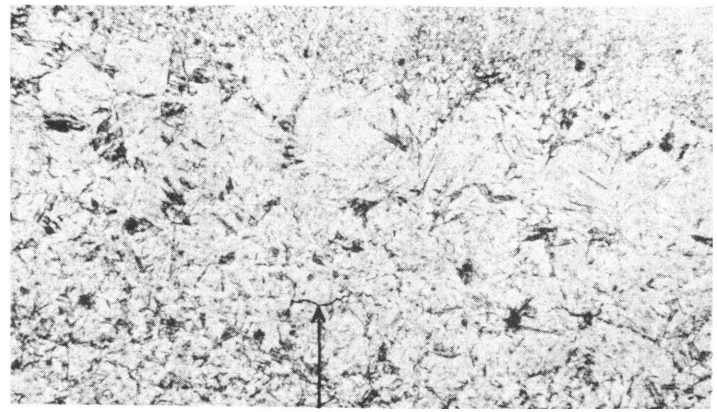

ONE SMALL CRACK

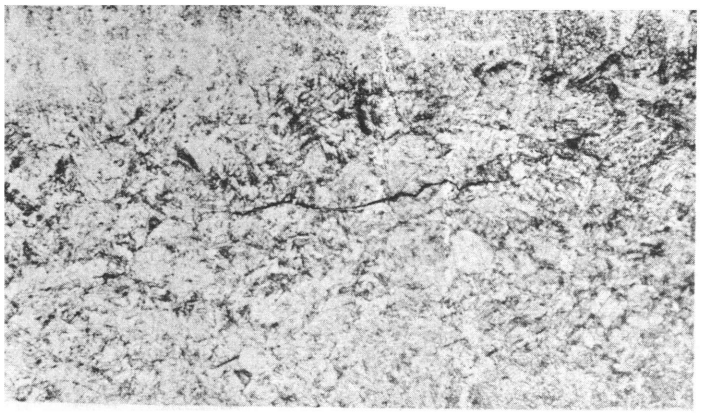

ONE LARGE CRACK

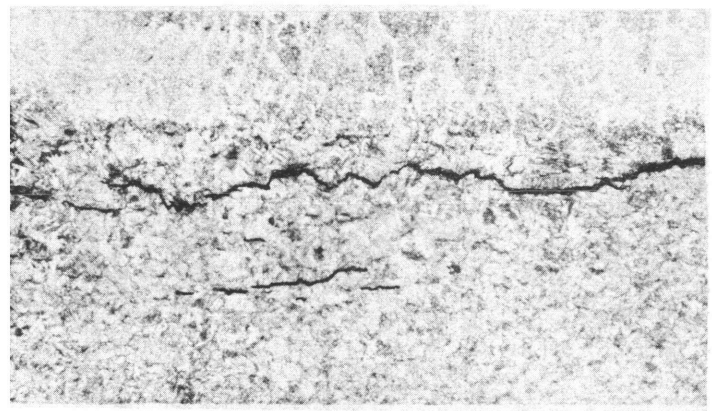

SEVERE CRACKING

Fig. 3 - Photomicrographs of Typical Underbead Cracking. Magnification 70x

Since accuracy and reproducibility of test results are affected by many variables, tests were conducted to determine what variables in this test had to be controlled and what effect they had on cracking results. Tests were conducted to determine: (1) influence of direction of saw cut with respect to the weld; (2) influence of direction of rolling of the steel; (3) effect of fumes produced as a result of the carbon-tetrachloride coolant which remained on the cold (10°F) test blocks; (4) effect of time of storage before sectioning; (5) effect of stress-relieving heat treatment after welding; (6) dimension tolerances for sectioning the welds; and (7) effect of using the same electrode for more than one weld.

The results of the first of these tests are given in Table 3. They indicate that longitudinally cut specimens are more uniform in the percent of cracking than those cut transversely, and that the direction of rolling has little effect. The tests on the effect of carbon tetrachloride which was used to wet the surface of the specimens just prior to welding to prevent frosting of the specimens when they were removed from the cold box showed no detrimental effects. Carbon tetrachloride was selected because it does not contain hydrogen and its decomposition products are not known to be harmful to steel, either molten or solid.

Since previous investigations[17] have indicated the necessity for controlling the time of storage between welding and testing, specimens of steels 382, 496, 527 and 531 were welded at 10°F and 70°F and stored over a period of from two hours to two weeks. The results, which are contained in Table 4, show that within the limits of the test, the amount of underbead cracking does not vary with time after welding.

The possibility of crack propagation due to changes in internal stress resulting from machining was determined. Ten specimens of steel 496 were welded at 10°F using the same welding technique. Twenty-four hours after welding, five of the specimens were stress-relieved at 1150° F and machined; and five were machined without stress-relieving. The specimens that were stress-relieved averaged 73 percent cracking (Table 5), as did the specimens that were not stress-relieved.

Sometimes during welding the weld bead does not follow the centerline of the steel block but travels slightly askew or wavers slightly from side to side. Under these not uncommon conditions, the weld bead is not sectioned as accurately as would be preferred. For the purpose of determining the amount of error that slight deviations in position could cause, four welds, two on steel 382 and two on 496, were made at 10°F. The specimens were saw-cut at the edge of the weld parallel to the length of bead, and examined for cracks. Further examination at sections 0.01" apart were made across the weld. The results are shown in Figure 4 and are plotted in Figure 5. There does not seem to be a sharp maximum in the vicinity of the center of the weld, but rather a plateau extending well beyond either side of the centerline of the weld, with a decrease in the amount of cracking near the edges. Hence welds deviating slightly from the center of the plate and/or welds machined slightly inaccurately should not affect the results of the test.

Table 6 shows the results of the tests to determine the effect of making more than one weld per electrode. Since the electrodes become heated and the composition of the coatings change through loss of moisture and burning of carbonaceous materials, it is possible that a major change in composition may change the results of the test. The results indicate that within the accuracy and reproducibility of the test there is no appreciable effect introduced by making more than one weld per electrode.

Tests were conducted to determine the differences in the percent of cracking as determined by visual and by magnafluxing methods. After welding the specimens were sectioned, polished, etched, and examined for cracks at 100 diameters and the percent of

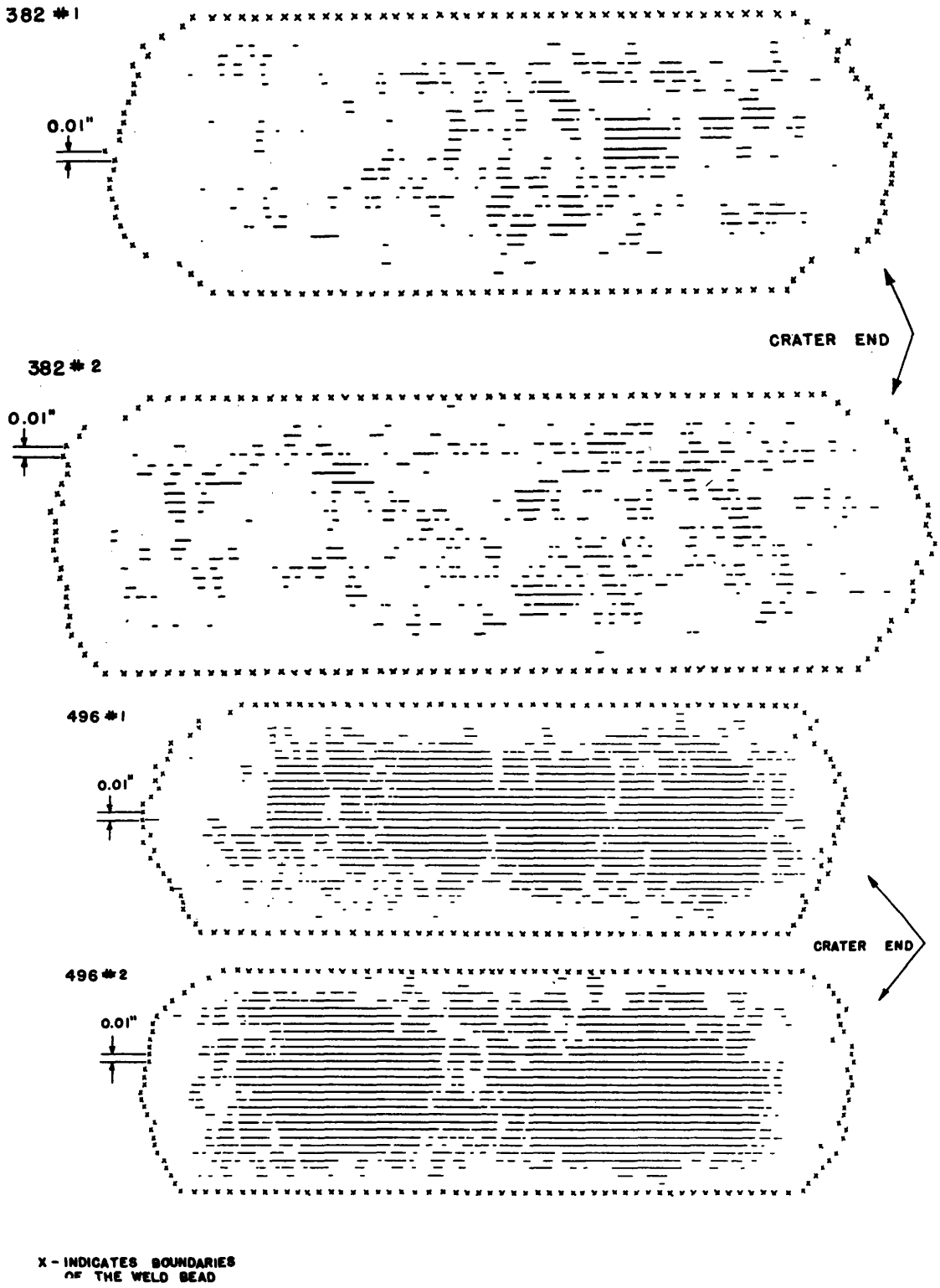

'ig. 4 - A Plan View Representing Schematically Cracking Under a Weld

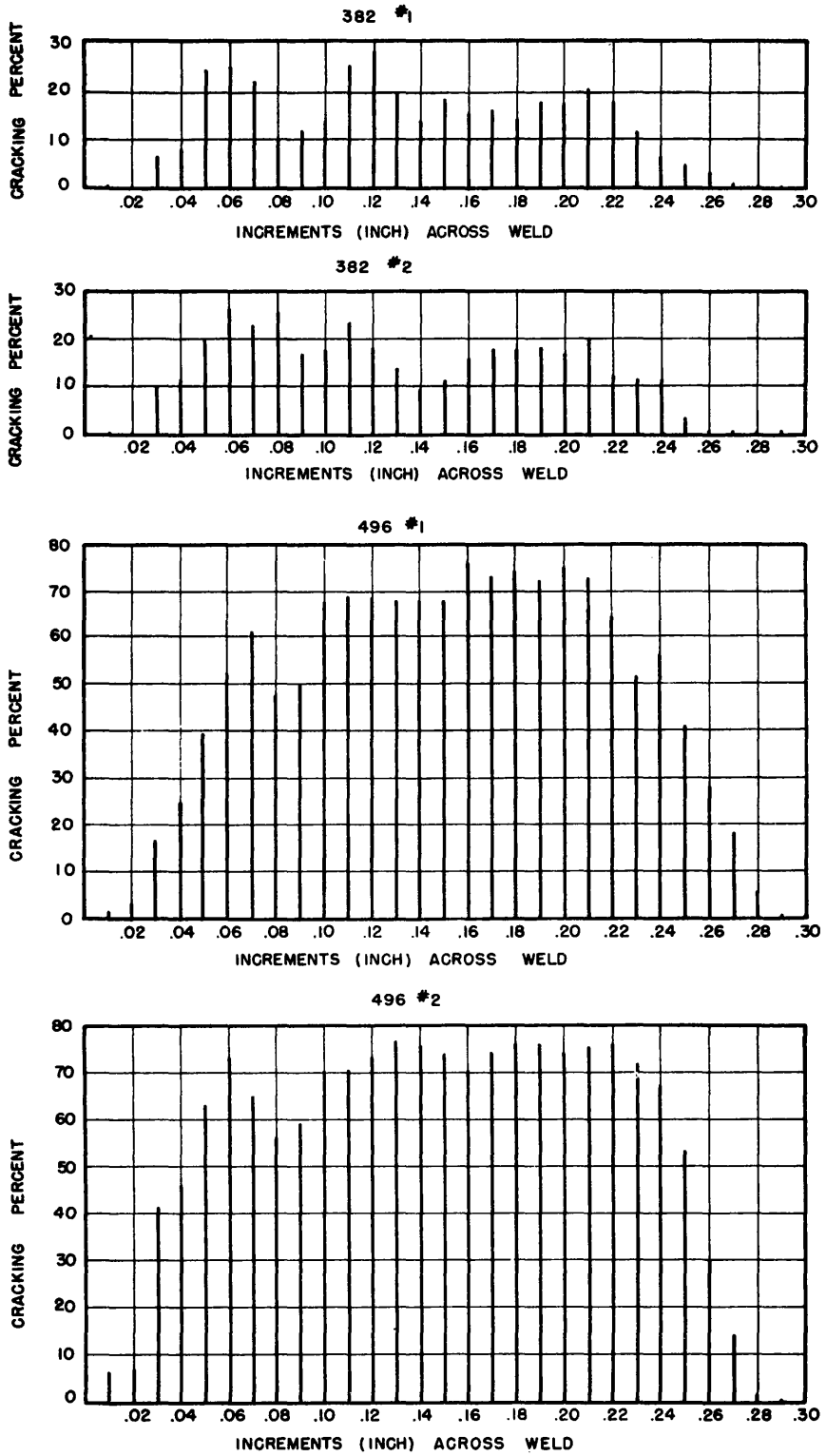

Fig. 5 - Plots of Cracking Distribution Across Weld

cracking recorded. The same specimens were then wet, magnafluxed on the etched surface, and the cellulosic impressions of the cracks were measured. Table 7 shows that the visual method reveals a smaller variation from specimen to specimen; it was therefore employed throughout this investigation.

Following the above preliminary work, the specimen procedure was standardized as follows:

1. A steel block 4 " x 3 " x plate thickness was ground on one of the large faces sufficiently to permit a 1 3/4" weld to be made along its centerline in the 4" dimension. All specimens of any steel were welded on the same side of the original plate. (Figure 6A.)

2. The blocks were held at 10°F or 70°F in a constant temperature box for a sufficient length of time to insure uniform temperature. Welds were then deposited with AWS E6010 electrodes 1/8 " in diameter. An automatic welding machine was used with a welding technique of 100 amperes, 24 to 25 volts reverse polarity, and 8 inches per minute speed of travel. The welding cycle was 12 seconds in duration.

3. After welding, the specimens were returned to the constant temperature box for 1 hour.

4. The specimens were sectioned by a power saw 24 hours after welding, milled almost to the center line, and then ground to a fine finish. Finally grinding scratches were removed with a number 600 belt operating at 90° to the scratches.

5. The specimens were etched with a 2 percent nital solution directly from the wet belt grinder. Care was taken to under etch rather than over etch.

6. Readings were taken at 100 diameters through a microscope mounted on a traveling table calibrated to 0.01 inch. A record was made of the length of crack, its location along the length of the weld, a special note was made if it met the fusion line at an angle rather than lying nearly parallel to it. A typical data sheet of readings is shown in Table 8; Figure 6B shows a schematic diagram of the cracking as it would appear to an observer.

EFFECT OF PROPERTIES OF BASE METAL

The properties of the steels were investigated to determine what correlation, if any, existed between physical properties and underbead cracking.

Chemical Composition

The chemical analyses of the twelve steels used in this investigation are listed in Table 1. These steels are of the Navy high-tensile variety with the exception of 526, which is a mild steel; and 581, which contains more nickel and less manganese.

Since it was felt that carbon and manganese would be the main elements that influence underbead cracking, the relationship of the percent of cracking to the percent of carbon and manganese was determined as shown in Figure 7. It can be seen that carbon above 0.15% results in serious cracking regardless of the manganese level (with the exception

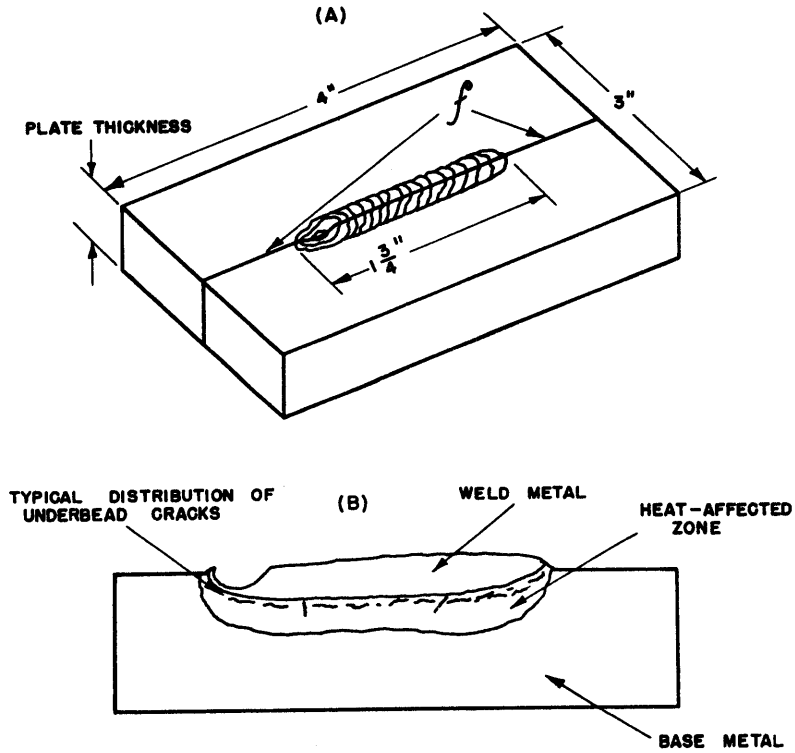

Fig. 6 - Sketch of NRL Standard Underbead Cracking Specimen with Cracking Distribution

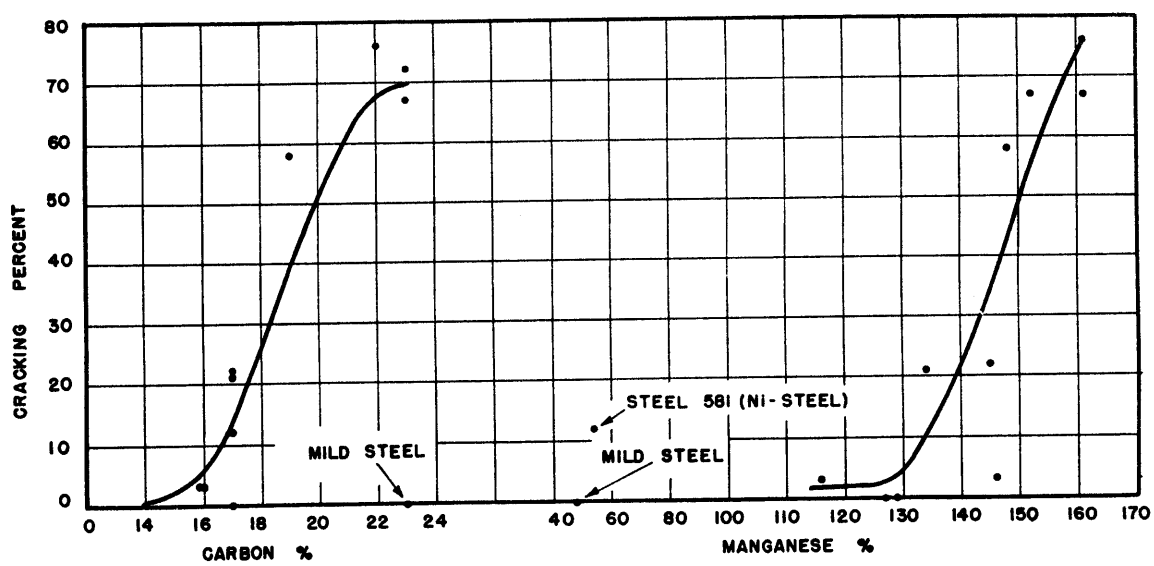

Fig. 7 - Relationship of Cracking to Percent of Carbon and Manganese

of the 0.23% carbon mild steel), and that manganese above 1.10% results in cracking. Steel 581 which contains 1.70% nickel does not correlate with the other steels.

The calculated hardenability characteristics of the twelve steels was examined. Table 9 shows the factors for the twelve steels for grain sizes of one and two. Figure 8 shows that an increase in hardenability results in an increase in percent of cracking. The hardenability level for 0% cracking should be less than 2.00 inches. The steels that did not correlate with this conclusion were #581 with 1.70% nickel and #395. When the product of the carbon and manganese factors was also plotted against the percent of cracking (Figure 9), the curve was very similar to those obtained when all the elements were used in calculating the hardenability. This is evidence that carbon and manganese are the major elements that influence underbead cracking in high-tensile steels.

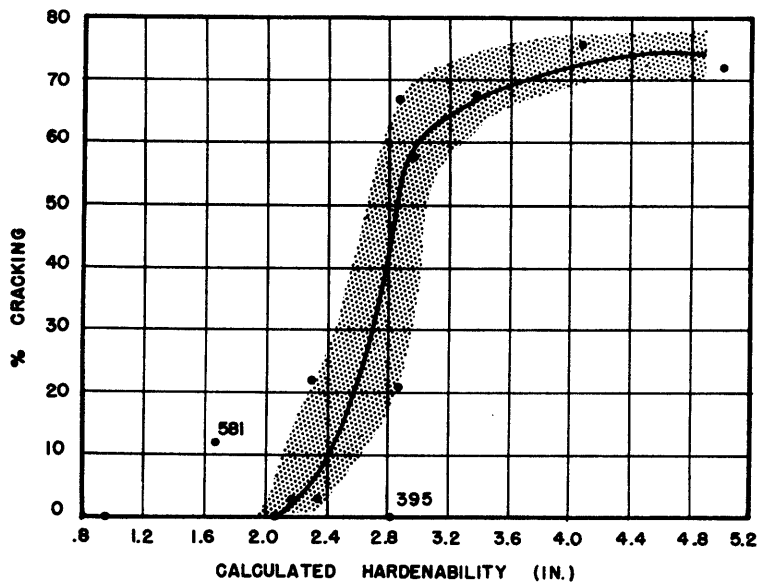

Fig. 8 - Relationship of Cracking to Calculated Hardenability

Tensile Strength and Hardness

The tensile properties of the steels are listed in Table 2. Threaded-end, 0.505"-diameter, tensile specimens were used to obtain these data. Tests were made in both the longitudinal and transverse direction with respect to the direction of rolling. The ultimate strengths of the steels varied between 61,000 and 95,000 psi, and the yield strengths from 31,750 to 59,000 psi. A comparison of both the longitudinal and transverse ultimate and yield strengths showed no significant difference. Ductility in the transverse direction was slightly less than in the longitudinal direction. No correlation was found between the tensile properties and the percent cracking.

The plate hardness for all twelve steels are listed in Table 2. No correlation was found between plate hardness and percent of cracking, as was expected because of the lack of correlation of cracking with tensile strength.

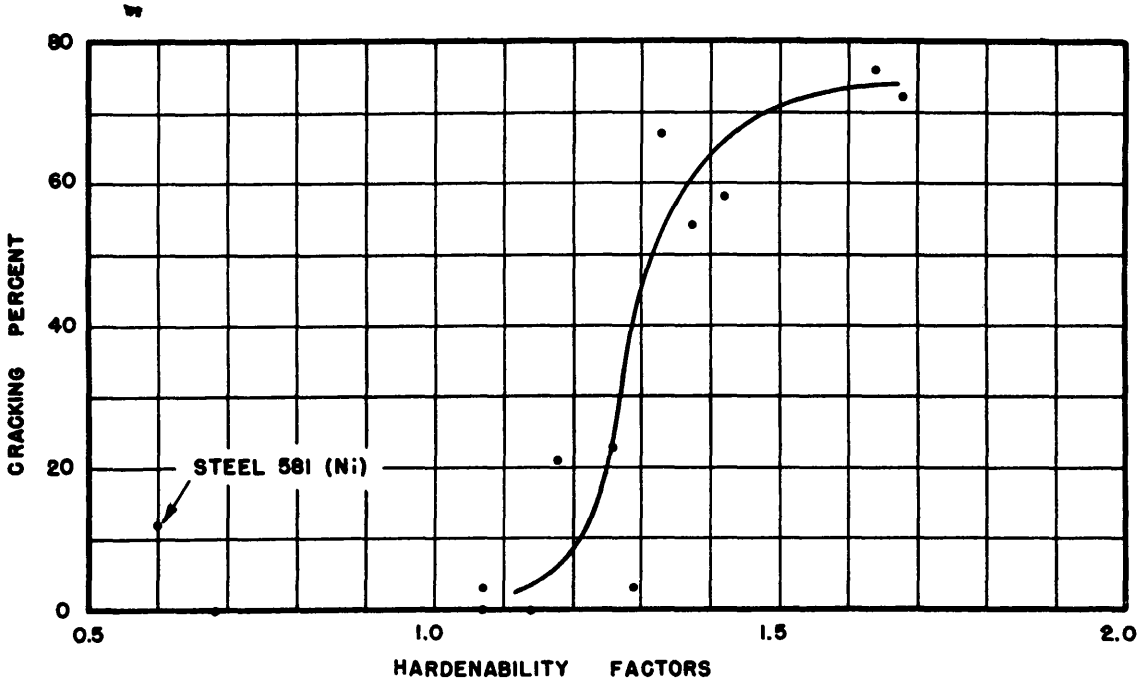

Fig. 9 - Relationship of Cracking to Manganese Factor x Carbon Factor

Plate Thickness

The degree of cracking in plates of various thicknesses was measured in order to determine trends due to size effect. Four steels, 312, 496, 578 and 581 in Table 10, were welded in the as-received thickness and also in lesser thicknesses obtained by machining off one side of the plate. Welds were made on the side of the plate which was not machined. The maximum percent cracking on steels 312, 496 and 578 was observed to be at 1" thickness; above and below this dimension cracking was considerably less as shown in Figure 10. Steel 581 exhibited maximum cracking at $\frac{1}{2}$" thickness. The reason for this change of cracking characteristics has not been definitely established; however, it is felt that the increase is probably due to an increase in cooling rate with thickness, which results in an increase both in the hardness and internal stress. Figure 11 shows that the maximum hardness in the heat-affected zone is reached at about 1" thickness. No explanation can be offered for the lesser cracking tendency above $\frac{1}{2}$" thickness.

EFFECT OF WELDING CONDITIONS

The effect of various welding conditions such as heat input, preheat temperature, underbead hardness, and type of electrode were investigated.

Heat Input

Tests were conducted to determine the effect of variations in current, voltage, speed of travel, and electrode size on the degree of cracking. Steels 396, 494, 496 and 531 were studied through variations in heat input from 18,000 joules/inch to 36,000 joules/inch. In order to obtain these limits, the electrodes were varied from 1/8" to 3/16" in diameter.

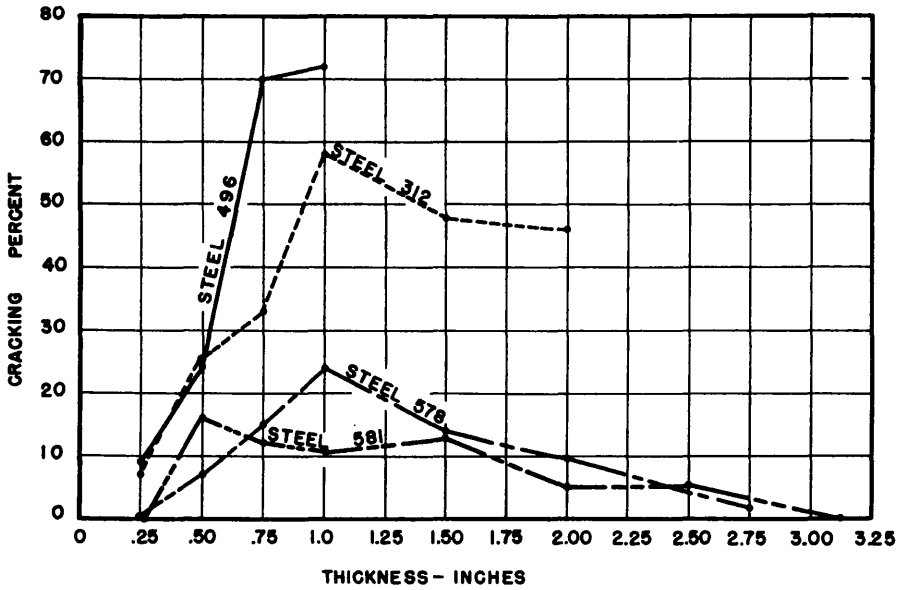

Fig. 10 - Relationship of Cracking to Plate Thickness

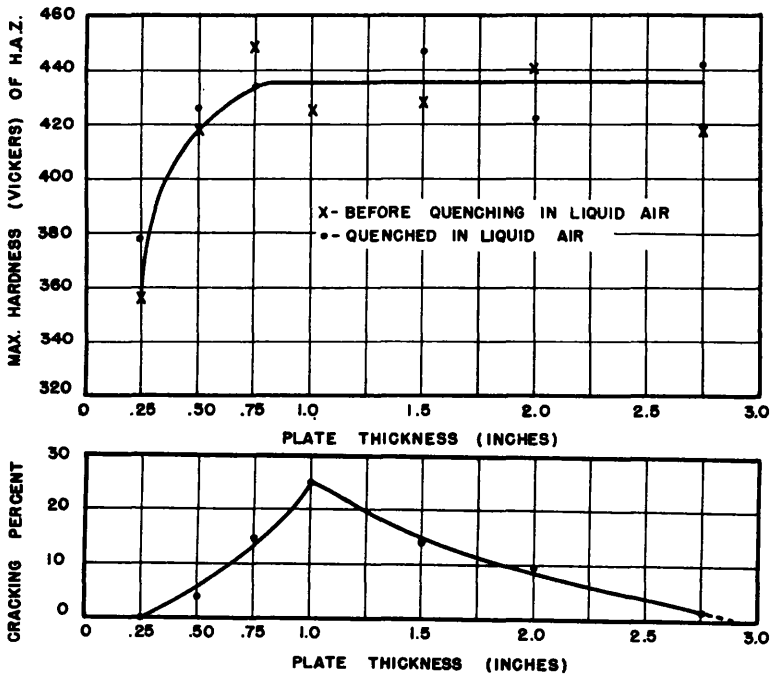

Fig. 11 - Relationship of Cracking to Hardness in Heat-Affected Zone to Plate Thickness

Table 11 contains the results of these tests. They indicate that increasing the heat input within the range reported has no appreciable effect on the cracking tendencies of these four high-tensile steels.

Preheat Temperature and Heat-Affected Zone Hardness

A study was made to determine the lowest possible preheating temperature needed to prevent underbead cracking. Steels 367, 396, 494, 496 and 531 (Table 12), which ranged in cracking tendency from 3% to 76%, were used in this study. The preheating temperatures ranged from 10°F (-12°C) to 300°F (149°C). Temperatures below room temperature were obtained in a refrigerator; and those above, in a core oven. The specimens were held at temperature for approximately three hours before welding. Upon removal from the furnace or refrigerator, the specimens were immediately welded with standard technique. The results are given in Table 12 and Figure 12 shows the results plotted as percent of cracking vs preheat temperatures. It was found that a preheat temperature of 300° F was required to eliminate all underbead cracking in the steel that had the greatest cracking tendency, and that preheating temperatures necessary to eliminate cracking varied from steel to steel. It was not possible to predict the preheat temperature necessary to eliminate cracking from the results of the standard cracking test.

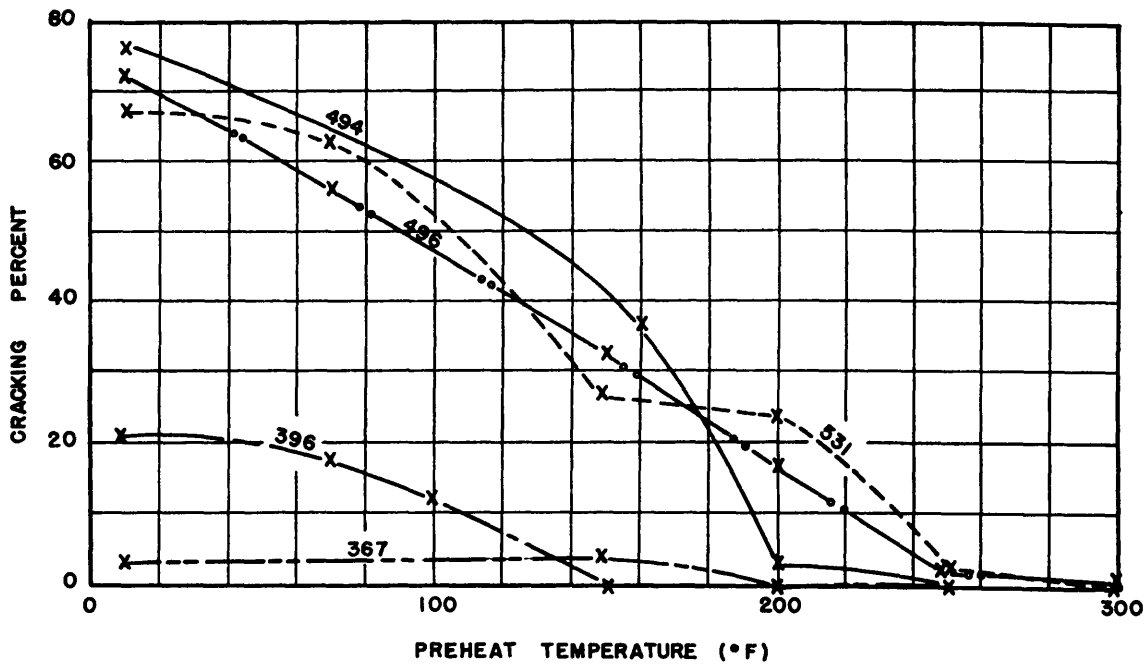

Fig. 12 - Effect of Preheat Temperature on Cracking

The maximum underbead hardness in the heat-affected zone was investigated to determine the possibility of a hardness level below which underbead cracking would be eliminated. The specimens that were tested for underbead cracking at different preheat temperatures were used in this study. The hardness measurements were made on a Vickers hardness tester with a 10 kilogram load, and a survey was taken across the fusion line, with the indents placed 0.020″ horizontally and 0.020″ vertically apart. The maximum

hardness values are reported in Table 12. These values were then plotted against preheat temperatures and the percent of cracking noted (Figure 13). This figure shows that for a given steel the maximum hardness decreases as the preheat temperature is increased, and that the percent of underbead cracking increases as the maximum underbead hardness increases. The maximum underbead hardness level at which cracking is eliminated varies from steel to steel.

Type of Electrode

The effect of electrodes other than E6010 type was investigated on steel 496 since it had a high susceptibility for underbead cracking. Slight modifications of current and voltage were necessary to deposit beads of acceptable appearance. Table 13 presents the type of electrodes used, the welding conditions, and the cracking results. AWS classes E6010 and E6013, which are high in carbonaceous material, showed the greatest underbead cracking tendency. Cracking was entirely eliminated with the 25/20 electrode, and the low-hydrogen electrode produced less than 1% cracking.

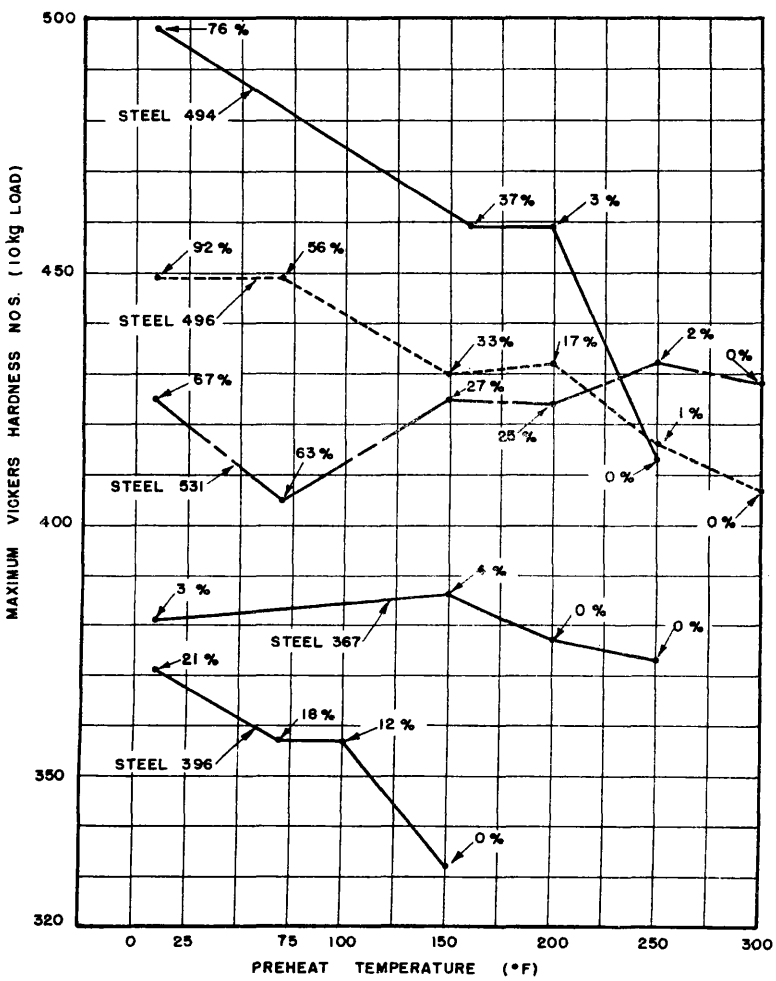

Fig. 13 - Hardness Values vs Preheat Temperatures

SUMMARY AND CONCLUSIONS

1. A test specimen has been developed for measuring the underbead cracking tendency in the heat-affected zone of a weldment. The specimen is easily prepared and examined, and can be made under conditions closely simulating those in production. The procedure has been tested and, if followed with reasonable care, will produce fairly quantitative results. It is possible to determine the effect of the temperature of welding, composition and thickness of the base metal, type of electrodes, and welding technique on the amount of cracking.

2. Cracking sensitivity increases with increase of carbon and manganese; also with an increase in hardenability (calculated).

3. An increase in tensile strength or in hardness does not result in an increase of cracking sensitivity.

4. Cracking increases as the plate thickness is increased to about one inch, but as the thickness is further increased the percent of cracking decreases.

5. Increasing the heat input causes no appreciable effect on underbead cracking within the range of heat inputs studied.

6. Preheating can eliminate underbead cracking. The preheating temperature required to eliminate cracking varies from steel to steel, and in general, the amount of cracking decreases with an increase in preheating temperature.

7. For a given steel, the percent of underbead cracking increases as the maximum underbead hardness increases, and the maximum underbead hardness level at which cracking can be eliminated varies from steel to steel.

8. Cellulose-coated electrodes show the greatest underbead cracking tendency. Cracking is entirely eliminated with the 25-20 electrode, and the low-hydrogen electrode produces less than 1% underbead cracking.

ACKNOWLEDGMENT

The authors wish to acknowledge Mr. G. G. Luther of the Welding Section for his assistance rendered in editing the manuscript and his interest in the problem.

* * *

TABLE 1
Chemical Composition of Steels Used in This Study

Steel	C	Mn	Si	P	(%) S	Ni	Cr	Mo	Cu	Al	Ti	V
312	0.19	1.48	0.25	0.035	0.020	0.13	0.05	0.03	0.19	0.02	0.01	0.003
367	0.16	1.16	0.26	0.019	0.027	0.08	0.05	0.02	0.19	0.02	---	0.090
382	0.16	1.46	0.20	0.025	0.024	0.14	0.10	.001	0.06	0.01	0.01	0.090
395	0.14	1.27	0.23	0.031	0.025	0.03	0.20	0.01	0.03	0.04	0.035	---
396	0.17	1.34	0.23	0.018	0.025	0.10	0.19	0.005	0.01	0.026	0.030	---
494	0.22	1.61	0.24	0.022	0.020	0.20	0.22	0.020	0.19	0.01	0.02	0.005
496	0.23	1.61	0.22	0.019	0.029	0.21	0.33	0.029	0.16	0.01	0.017	0.005
526	0.23	0.48	0.05	0.080	0.031	0.03	0.03	0.01	0.02	0.01	---	---
527	0.17	1.29	0.23	0.014	0.028	0.03	0.05	0.01	0.02	0.01	0.052	0.005
531	0.16	1.52	0.36	0.027	0.026	0.13	0.08	0.01	0.15	0.02	0.02	0.005
578	0.17	1.45	0.25	0.024	0.022	0.05	0.05	0.02	0.25	0.01	0.01	0.01
581	0.17	0.54	0.20	0.014	0.025	1.70	0.08	0.005	0.20	0.01	0.01	0.05

TABLE 2
Tensile Properties ** of Steels Used in This Study

Steel	Yield Strength (psi)	Ultimate Strength (psi)	Elong. (% in 2")	Reduction in Area (%)	Plate Hardness (Brinell)
312 (L)	46,050	79,000	29.0	68.4	164
312 (T)	46,750	80,500	28.0	63.5	---
367 (L)	57,300	82,150	30.0	60.0	167
367 (T)	57,500	82,125	30.0	65.5	---
382 (L)	59,750	85,900	31.0	72.4	176
382 (T)	58,750	86,200	27.5	61.2	---
395 (L)	53,125	78,500	32.0	64.8	163
395 (T)	52,625	77,250	32.0	67.7	---
396 (L)	54,000	79,500	29.0*	49.5*	150
396 (T)	52,500	79,125	32.5	68.0	---
494 (L)	59,000	90,500	32.5	73.0	181
494 (T)	59,750	92,125	22.5	55.0	---
496 (L)	58,000	95,375	26.0	61.5	187
496 (T)	57,750	95,250	23.0	49.0	---
526 (L)	30,625	61,000	39.0	61.0	118
526 (T)	32,250	60,825	38.0	56.6	---
527 (L)	47,500	71,600	36.0	71.5	145
527 (T)	45,250	73,250	32.0	53.7	---
531 (L)	52,500	79,500	31.5	67.0	163
531 (T)	53,500	79,827	29.2	52.0	---
578 (L)	46,750	77,000	35.0	63.0	160
578 (T)	47,250	76,825	34.0	65.5	---
581 (L)	58,000	84,500	26.0	55.0	197
581 (T)	57,825	84,375	27.5	62.0	---

L Longitudinal
T Transverse

* Laminated
** 0.505" diameter tensile specimens.

TABLE 3
Variables Affecting Cracking Test

Weld & Direction of Rolling	Welding Temperature (°F)	Quenched after Welding	Saw Cut Weld	% Cracking														
				Steel 496					Steel 395					Steel 382				
				1,	2,	3,	4,	5	1,	2,	3,	4,	5	1,	2,	3,	4,	5
L	70	No	L	71	76	69	67	70	0	0	0	0	0	0	0	0	0	0
L	70	No	T	13	25	41	77	--	0	0	0	0	0	0	0	0	0	0
T	10	Yes	L	76	55	76	67	73	0	0	0	0	0	0	0	0	0	0
T	10	Yes	T	82	80	88	87	79	0	0	0	0	0	0	0	0	0	0
L	70	No	L	65	60	50	72	71	0	0	0	0	0	0	6	3	7	0
T	70	No	L	64	72	64	60	65	0	0	0	0	0	0	5	1	3	6
L	10	Yes	L	80	63	64	72	--	0	0	0	0	0	2	4	5	11	1
T	10	Yes	L	66	80	55	77	51	0	0	0	0	0	1	7	3	2	3
L*	70	No	L	78	55	71	52	69	0	0	0	0	0	11	5	3	2	0

All specimens welded at 100 amperes, 23 volts, 8 inches/minute, with a 1/8 inch AWS Class E6010 electrode.

L Longitudinal
T Transverse

* Dipped in CCl_4 before welding to test for possible effect of fumes in welding arc.

TABLE 4
Relation of Cracking to Time of Storage

Steel	Temperature of Welding (°F)	Welding Technique*	Average Percent Cracking of 5 Specimens		
			Sawed at 2 Hours	Sawed at 2 Days	Sawed at 2 Weeks
382	70	100-24-8	11	14	12
	10	100-24-8	3	4	9
496	70	100-24-8	56	68	60
	10	100-24-8	64	68	71
527	70	100-24-8	4	3	3
	10	100-24-8	4	4	1
531	70	100-24-8	63	52	63
	10	100-24-8	51	61	63

* Specimens welded with AWS Class E6010 electrodes.

TABLE 5
Stress Relief

Steel 496	Welding Technique*	Percent Cracking 1	2	3	4	5	Average %
A	100-24-8	70	70	75	70	82	73
B	100-24-8	72	75	76	66	78	73

* Specimens welded at 10°F with AWS Class E6010 electrodes.

A Standard technique - sawed 24 hours after welding
B Stress relieved - specimens stress relieved at 1150° F after being stored for 24 hours at 60° F.

TABLE 6
Relationship of Number of Welds Per Electrode to Cracking

Electrode	Steel	Welding Technique	Welds Per Electrode #1	#2	#3	#4
			Percent Cracking			
A	496	100-24-8	75	68	70	*
B	496	100-24-8	76	60	65	*
C	496	100-24-8	53	--	--	--
D	496	100-24-8	81	--	--	--
F	382	100-24-8	6	1	7	*
H	382	100-24-8	4	3	9	0
J	382	100-24-8	0	--	--	--
K	382	100-24-8	2	--	--	--

* Vacancies due to welding machine difficulties.

TABLE 7
Comparison of Test Methods

Steel	Percent Cracking: Magnetic Powder	Percent Cracking: Optical (100X)
531	23	70
531	48	72
531	23	64
531	23	72

Steel *†	Magnaflux (Wet)	Deviation	Percent Cracking: Optical (100X)	Deviation
396-1	5	10.2	13	2.5
396-2	26 h**	10.8	14	1.5
396-3	18	2.8	10 *l*	5.5
396-4	4 *l*	11.2	10	5.5
396-5	21	5.8	15	.5
396-6	25	9.8	25 h	9.5
396-7	13	2.2	15	.5
396-8	24	8.8	27	11.5
396-9	8	7.2	12	3.5
396-10	8	7.2	14	1.5
	15.2 Av.	17.6 Av.	15.5 Av.	4.2 Av.
494-1	60	4.7	69	2.2
494-2	68	3.3	73	1.8
494-3	65	.3	72	.8
494-4	69	4.3	74	2.8
494-5	67	2.3	72	.8
494-6	69	4.3	74 h	2.8
494-7	57	7.7	69	2.2
494-8	65	.3	70	1.2
494-9	57 *l*	7.7	65 *l*	6.2
494-10	70 h	5.3	74	2.8
	64.7 Av.	4.0 Av.	71.2 Av.	2.4 Av.
531-1	72	6.8	66	2.0
531-2	74 h	8.8	65	3.0
531-3	70	4.8	72	4.0
531-4	72	6.8	66	2.0
531-5	68	2.8	68	0.0
531-6	47 *l*	18.2	62 *l*	6.0
531-7	65	.2	73 h	5.0
531-8	65	.2	72	4.0
531-9	62	3.2	72	4.0
531-10	57	8.2	64	4.0
	65.2 Av.	6.0 Av.	68.0 Av.	3.4 Av.
496-1	66	.8	68	1
496-2	68	2.8	70	1
496-3	63	2.2	67	2
496-4	75 h	9.8	74 h	5
496-5	54 *l*	11.2	66 *l*	3
	62.2 Av.	5.4 Av.	69.0 Av.	2.4 Av.

* All specimens welded at 100 amperes, 23 volts, 8 inches/minute, with a 1/8 inch AWS class E6010 electrode.
** H - high *l* - low.
† Welding temperature 10°F.

TABLE 8
Typical Data Sheet

Specimen No. 100 - 4 Jan. 15, 1948
Beginning end of weld = 0.000 ″
Total Length = 1.768 ″

Reading at Start of Crack (Inches)		Reading at End of Crack (Inches)		Length of Crack (Inches)		Angle of Crack to Fusion Line (Degrees)
0.000		0.000		0.000		
0.126F*		0.145		0.019		45
0.153F		0.169		0.016		45
0.170		0.208		0.038		
0.233		0.276		0.043		
0.279F		0.295		0.016		45
0.295F		0.308		0.013		45
0.309		0.330		0.021		
0.332		0.375		0.043		
0.376		0.469		0.093		
0.671		0.998		0.327		
0.999		1.080		0.081		
1.085		-----		-----		90
1.091		1.108		0.017		
1.139		1.167		0.028		
1.176		1.271		0.095		
1.427		-----		-----		90
1.511		1.540		0.029		
1.574		1.585F		0.011		60
1.600		1.604		0.004		
1.645		1.692		0.047		
1.697		1.704		0.007		
			Total =	0.948		

$$\frac{\text{Total Cracking in Inches}}{\text{Total Length in Inches}} = \frac{0.948}{1.768} \times 100 = 53.6\% \text{ Cracking}$$

* F = Fusion line end of a crack which was not parallel to the weld bead.

TABLE 9
Calculated Hardenability Data from Grossman's Curves

Steel	D_I (G.S. #1)	D_I (G.S. #2)	Mn Factor X C. Factor (G.S. #1)	Mn Factor X C. Factor (G.S. #2)	Average % Cracking at 10° F.
312	2.97	2.75	1.42	1.31	58
367	2.18	2.00	1.07	0.98	3
382	2.36	2.16	1.29	1.18	3
395	2.82	2.62	1.07	0.99	0
396	2.88	2.78	1.18	1.14	21
494	4.07	3.76	1.64	1.51	76
496	5.04	4.60	1.18	1.53	72
526	.945	.865	0.68	0.62	0
527	2.08	2.02	1.14	1.10	0
531	2.88	2.64	1.33	1.22	67
578	2.30	2.23	1.26	1.22	22
581	1.68	1.62	0.60	0.58	12

TABLE 10
Relation of Plate Thickness to Cracking
(Specimens Welded at 10° F)

Steel	Thickness (inches)	Average Cracking* (%)	Max. H.A.Z. Vickers Hardness	Max. H.A.Z.** Vickers Hardness
312	2	47		
312	1-1/2	48		
312	1	58		
312	3/4	34		
312	1/2	26		
312	1/4	8		
496	1	72		
496	3/4	70		
496	1/2	38		
496	1/4	6		
578	2-3/4	2	419	442
578	2	10	441	421
578	1-1/2	14	428	447
578	1	25	427	426
578	3/4	15	449	434
578	1/2	7	418	425
578	1/4	0	357	379
581	3-1/8	1		
581	2-1/2	5		
581	2	4		
581	1-1/2	13		
581	1	12		
581	3/4	10		
581	1/2	17		
581	1/4	0		

* The average of five specimens welded with a 1/8" Airco 78E electrode at 100 amperes, 24 volts, and 8 inches per minute.
** Quenched in Liquid Air.

TABLE 11
Heat Input Data*

Input Technique	Joules/inch†	Steel Percent Cracking‡			
		396	494	496	531
1/8″ electrode					
100-24-8	18,000	3	76	72	67
120-24-8	21,600	7	67	67	54
140-24-8	25,200	2	53	56	58
100-24-4	36,000	14	62	57	69
5/32″ electrode					
110-25-8	20,600	12	68	69	63
140-25-8	26,200	30	67	71	68
165-25-8	31,000	17	73	75	69
3/16″ electrode					
165-25-8	31,000	20	73	63	64

* Welded with AWS Class E6010 electrodes at 10° F.

† Joules/inch = $\frac{\text{Amperes x volts x 60}}{\text{Speed of travel}}$.

‡ Average of 5 specimens.

TABLE 12
Relation of Cracking to Preheat Temperatures

Steel	Welding Technique	Temperature (°F)	Percent Cracking Specimen					Average Cracking (%)	Max. H.A.Z. Vickers Hardness
			1	2	3	4	5		
367	100-25-8	10	0	7	7	0	1	3	381
367	100-25-8	150	12	0	4	2	0	4	386
367	100-25-8	200	0	1	0	1	0	0	377
367	100-25-8	250	0	0	0	1	0	0	373
396	100-25-8	10	31	37	-	14	13	21	370
396	100-25-8	70	10	-	10	-	35	18	357
396	100-25-8	100	3	2	6	18	31	12	357
396	100-25-8	150	1	0	0	0	0	0	332
494	100-25-8	10	66	78	89	76	71	76	498
494	100-25-8	160	31	45	-	41	32	37	459
494	100-25-8	200	0	5	6	4	0	3	459
494	100-25-8	250	0	0	0	0	0	0	413
496	100-25-8	10	69	61	81	70	80	72	449
496	100-25-8	70	45	61	56	72	48	56	449
496	100-25-8	150	54	39	27	20	26	33	430
496	100-25-8	200	21	20	5	22	-	17	432
496	100-25-8	250	0	0	1	2	0	1	416
496	100-25-8	300	0	0	0	0	0	0	407
531	100-25-8	10	79	68	65	62	62	67	425
531	100-25-8	70	21	70	72	78	73	63	405
531	100-25-8	150	28	10	55	21	21	27	425
531	100-25-8	200	27	38	19	19	24	25	424
531	100-25-8	250	1	0	2	1	6	2	432
531	100-25-8	300	-0	0	0	0	0	0	428

TABLE 13
Cracking Tests with Different Electrodes

Electrode	Type and/or Classification	Welding Technique*	% Cracking‡ at 10° F	Average
Commercial	E6010	100-24-8	80,69,61,70,81	72
Commercial	E6013	100-21-8	69,76,59	68
Commercial	E10012†	108-22-8	11,1,0,8,4	5
Commercial	E7020 & E7030	115-23-8	2,4,4,15,18	9
Commercial	25-20	100-25-8	0,0,0,0,0	0
Commercial	Experimental Mild Steel	100-22-8	1,0,0,1,0	1
N.R.L.	Experimental	125-22-10	1,19,9,5,24	12
Commercial	E6015 Low Hydrogen Mild Steel	100-22-8	.6,.2,.3,.6,.0§	0.4

* 100-25-8
100 amperes
25 volts
8 inches per minute travel.
† An approximate classification.
‡ All tests run on Steel 496; all electrodes 1/8 inch diameter.
§ Small weld metal cracks.

This page intentionally left blank.

REFERENCES

[1] Crawford, W. F., and Carr, L. H., "Welding in the Manufacture of Valves for High Pressures and Temperatures," Welding J. 18, 713-722, 1939.

[2] Roberts, A. M., "Sound Repair of Steel Castings by Welding," Iron and Steel Inst. Welding Symposium, 1, 635-645, 1935.

[3] Swinden, T., and Reeve, L., "Metallurgical Aspects of the Welding of Low Alloy Structural Steels," Trans. Inst. Welding 1, 7-23, 1938.

[4] Wilkenson, T. B., and O'Neill, H., Proc. Inst. Mech. Engrs., 141, 497-512, 1939.

[5] Voldrich, C. B., and Williams, R. D., "Weldability Tests of Aircraft Structural Steel," Welding J. 22, 545s-554s, 1943.

[6] Spraragen, W., and Claussen, G. E., "A Review of the Literature to July 1, 1939, Base Metal Cracks," Welding J. 20, 201s-219s, 1941.

[7] Bardenheuer, P., and Bottenberg, W., "Die Schweissrissigkeit von Chrom-Moly Stahlen," Arch. Eisenhutten. 11, 375-383, 1937-38.

[8] Zapffe, C. A., and Sims, C. E., "Defects in Weld Metal and Hydrogen in Steel," Welding J. 19, 377s-395s, 1940.

[9] Herres, S. A., "Arc Welding of Alloy Steels," Transactions Am. Soc. Metals, 33, 535-563, 1944.

[10] Hoyt, S. L., Sims, C. E., and Banta, H. M., "Metallurgical Factors of Underbead Cracking," Metals Techno. 12, TP 1847, June 1945.

[11] Gibson, A. E., and Hodge, J. C., Welding Handbook, pp. 464-497, 1938.

[12] Zvegintsev, C. K., "Testing of Alloy Steels for the Development of Flaws in Welding," J. Metal Indst. - (USSR), pp. 67-70, 1940.

[13] Jackson, C. E., "Elimination of Cracking Tendency in Welding Navy High Tensile Steel," Naval Research Laboratory Report No. M-2277, April 1944.

[14] Eilender, W., and Pribyl, R., "Zur Frage der Schweissempfindlichkeit von Chrom-Molybdan Staehlen," Arch. Eisenhutten., 11, 443-448, 1937-38.

[15] Rollason, E. C., "Part 1, The Cracking Problem with Special Reference to Thermal Characteristics," Welding J. 20, 266s-272s, 1941.

[16] Banta, H. M., Dunkerley, F. J., Voldrich, C. B., Schlass, J. J., and Sims, C. E., "Investigation of Metallurgical Quality of Steels Used for Hull Construction," O.S.R.D. No. 5492, Aug. 24, 1945.

[17] Jackson, C. E., Luther, G. G., "Effect of Time of Storage on Ductility of Welded Test Specimens," Metal Techno. TP 1772, Jan. 1945.

PRNC-1118-5-27-49-200