N R L REPORT NO. F-3315

DESCRIPTION AND USE OF ELECTRON MICROMETER TUBE, TYPE C796C

T. B. Fryer

July 14, 1948

APPROVED FOR PUBLIC RELEASE - DISTRIBUTION UNLIMITED

Approved by:

Dr. J. E. Dinger, Head, Aerology Section
Dr. E. B. Stephenson, Superintendent, Mechanics Division

NAVAL RESEARCH LABORATORY
CAPTAIN H. A. SCHADE, USN, DIRECTOR
WASHINGTON, D.C.

DISTRIBUTION

ONR Attn: Code N-482	(2)
BuAer	(5)
BuOrd	(2)
BuShips	(2)
Dir., USNEL	(2)
CO, USNOTS Attn. Reports Unit	(2)
OCSigO Attn: Ch. Eng. & Tech. Div.,SIGTM-S	(1)
CO, SCEL Attn: Dir. of Eng.	(2)
U. S. Weather Bureau Attn: Dr. Ross Gunn	(5)
RDB Attn: Library Attn: Navy Secretary	(2) (1)
Science and Technology Project Attn: Mr. J. H. Heald	(2)

CONTENTS

	Page
Abstract	iv
Problem Status	iv
Authorization	iv
INTRODUCTION	1
DESCRIPTION OF THE TUBE	1
CIRCUITS	2
OPERATION	4
Sensitivity	4
Linearity	6
Stability	7
CONCLUSIONS	7

ABSTRACT

This report gives circuits and typical performance data for the electron micrometer tube. The advantages and disadvantages of various circuits are considered, and three typical circuit diagrams are presented. Data are also given on the manner in which electron micrometer tubes can be expected to perform with respect to linearity, sensitivity, and stability.

PROBLEM STATUS

This report completes the work on that part of the problem relating to the electron micrometer tube. Other work on the problem is continuing.

AUTHORIZATION

NRL Problem No.P05-02R (BuAer No. TED-NRL-MA-301).

DESCRIPTION AND USE OF ELECTRON MICROMETER TUBE, TYPE C796C

INTRODUCTION

The electron micrometer tube, useful for the accurate conversion of very small mechanical motions into electrical currents, has been developed at the Naval Research Laboratory, much of the work being done under the guidance of Dr. Ross Gunn.* A description of the type C796A tube, manufactured by RCA Victor Division, has been presented in NRL Report No. 0-2977. The type C796C tube has subsequently been manufactured for NRL by RCA and differs from the former type in a few mechanical aspects.

Since at present no further modifications are contemplated, this report aims to summarize the characteristics of the tube, to present an a-c-bridge method for its use, and to point out limitations which possible future modifications should seek to overcome.

DESCRIPTION OF THE TUBE

The electron micrometer tube is a double triode having a movable plate which is common to the two triode sections. The internal construction of the tube is shown in Figure 1. The common plate is moveable by means of a stem which projects through a flexible diaphragm, whereas the two cathodes and grids are held rigid with respect to the shell of the tube. This diaphragm is welded to the shell and therefore forms a part of the metal envelope. A movement of the stem in the proper direction (perpendicular to the plane of the red and white lines) will cause the plate to move closer to one cathode and farther away from the other with a consequent increase in the one cathode current and a decrease in the other. The current change in the two triodes is a measure of the mechanical movement of the stem, and the change can be read with a suitable voltage or current meter.

Because the shell of the tube is at plate potential, it is necessary to surround each cathode by a shield to prevent a flow of electrons from cathode to shell. This shield has a grid-covered opening between cathode and plate. Electrical connection is made through two pins of the tube to each of the two shield-grid structures, thus making it possible to apply biasing potentials to the grids.

---

*Gunn, Ross-"A Convenient Electrical Micrometer and its Use in Mechanical Measurements," Jour. Appl. Mech., 7A; 49-52, June, 1940.

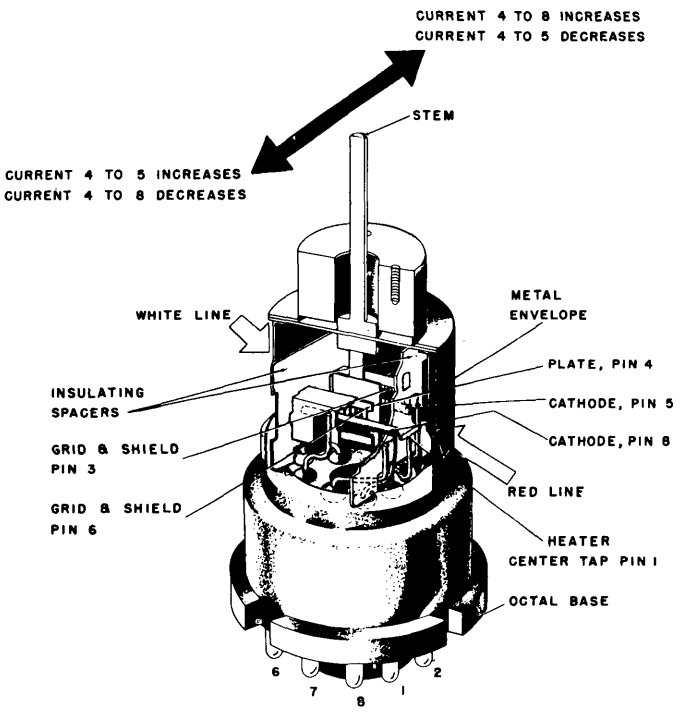

Figure 1-Cross Section of Tube

Figure 2 shows the dimensions of the tube. The addition of the sturdy mounting ring surrounding the stem and diaphragm, as seen in Figures 1 and 2, is the only modification made on tubes type C796C as compared to the type C796A. In the C796A tube the stem and diaphragm were protected from air currents by a thin shield while in the C796C tube the thin shield has been replaced by the sturdy ring. This ring provides a rigid section for mounting purposes and at the same time protects the stem and diaphragm from air currents. A suitable holder for the C796C tube is shown in Figure 3. The tube can also be mounted by means of three No. 3-48 holes tapped in the heavy ring. Proper orientation of the holes for measuring a force in a given direction can be determined from either Figure 1 or 2.

CIRCUITS

Figures 4, 5, and 6 show circuits for the use of the micrometer tube. Some of the advantages and disadvantages of each circuit will be pointed out, so that the best circuit for a particular application can be determined.

Figure 4 gives a d-c Wheatstone bridge circuit with the two triodes (connected as diodes) used as two arms of the bridge.* This circuit has the advantage of simplicity and is satisfactory for most uses of the tube. However, if it is necessary to amplify the bridge signal for a recorder or controller, the d-c bridge becomes difficult to use and an a-c bridge is more satisfactory. It should be pointed out that the sensitivity of the d-c bridge is

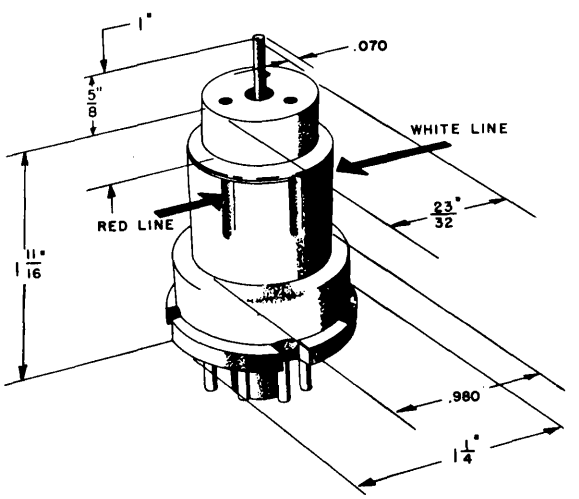

Figure 2-Tube Dimensions

* For a more complete discussion of the d-c bridge circuit see NRL Report No. 0-2957.

such that this circuit can be used for many applications without any amplification.

An a-c bridge circuit is shown in Figure 5. The a-c voltage is applied to the bridge in series with a d-c voltage and the relative voltage values are such that the peak a-c voltage is always less that the d-c voltage. Under this condition the plate of the micrometer tube is at a positive potential during the complete cycle, thus preventing rectifying action by the tube. If the d-c biasing was not used, the rectifying action of the tube would cause the bridge unbalance signal to be greatly distorted.

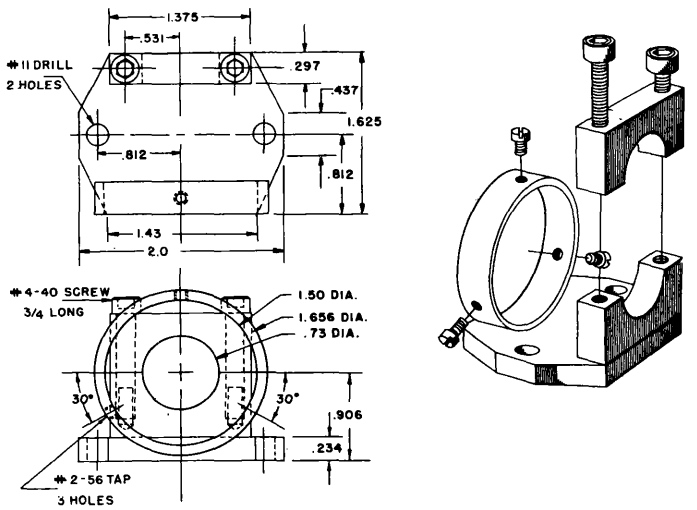

Figure 3-Tube Holder

There should be used across the bridge a transformer having an impedance comparable to the bridge arm impedances and having low capacitance to ground. No completely satisfactory commercial transformer was found. However, the General Radio 578B transformer was found workable in that it has low capacitance to ground, although the impedance is too low for optimum sensitivity. Small air condensers are placed in parallel with two arms of the bridge so that the bridge can be completely balanced. The type of transformer used in the bridge depends on the choice of frequency of the a-c excitation, which, in general, should be at least ten times the maximum mechanical frequency to be measured with the tube. In general the lowest workable frequency should be used, since this simplifies balancing the bridge and the length of cable that can be used between the tube and the bridge will depend upon the exciting frequency. The

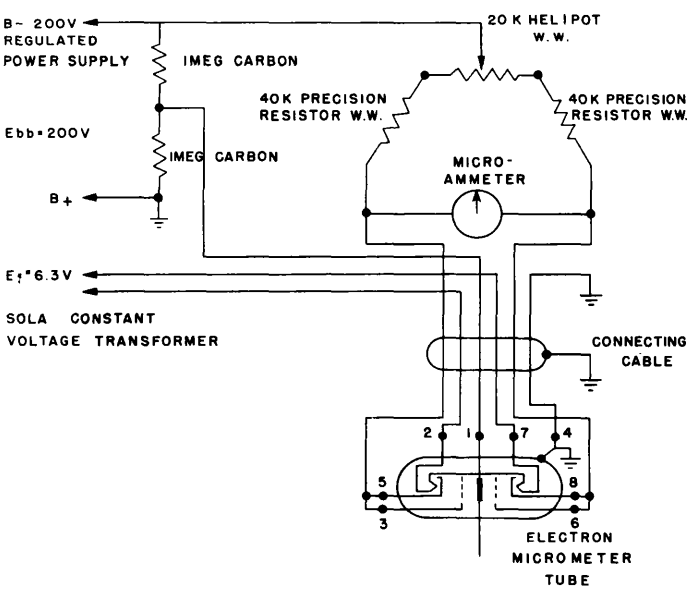

Figure 4-D-C Bridge Circuit

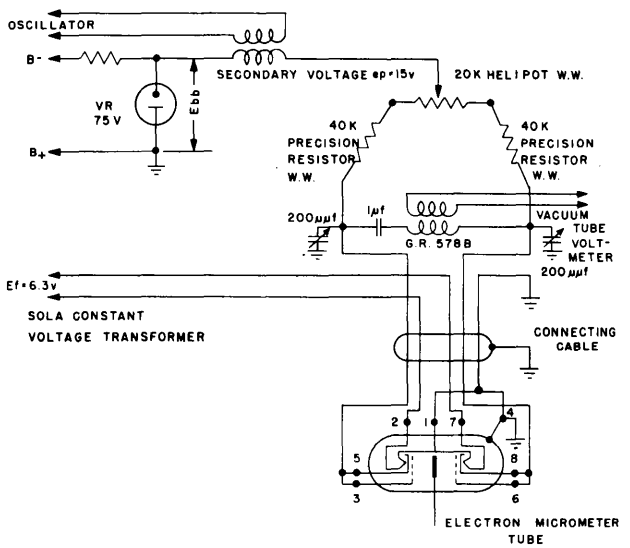

Figure 5-A-C Bridge Circuit with Transformer Output Coupling

capacitance added by the cable should be sufficiently low so that the capacitive impedance is small compared to the tube impedance of approximately 40,000 ohms.

Figure 6 shows another a-c bridge in which the output of the bridge is presented to a high impedance grid circuit. A double triode tube (6SN7) used in the manner shown makes it possible to use an ordinary audio transformer with good results, that is, high sensitivity and little added capacitances to the bridge. The extra balancing capacitances needed in the bridge are therefore smaller than those used in the circuit of Figure 5. Since in Figure 6 the 6SN7 tube forms a part of the bridge circuit, good tubes should be chosen to provide stability. The new RCA red tube 5692 should work well in this position.

OPERATION

Three factors important in the use of the micrometer will be discussed, namely: (1) sensitivity, (2) linearity, and (3) stability.

(1) Sensitivity

The sensitivity is expressed as the current or voltage change per milliradian angular deflection of the stem. This figure is non-dimensional and can be used to calculate the sensitivity for any length stem in either English or metric units. Table I shows the sensitivity for a typical tube used in the circuits of Figures 4, 5, and 6. The sensitivity (in this case expressed as microamperes per 0.001 inch) for a ½-inch-length

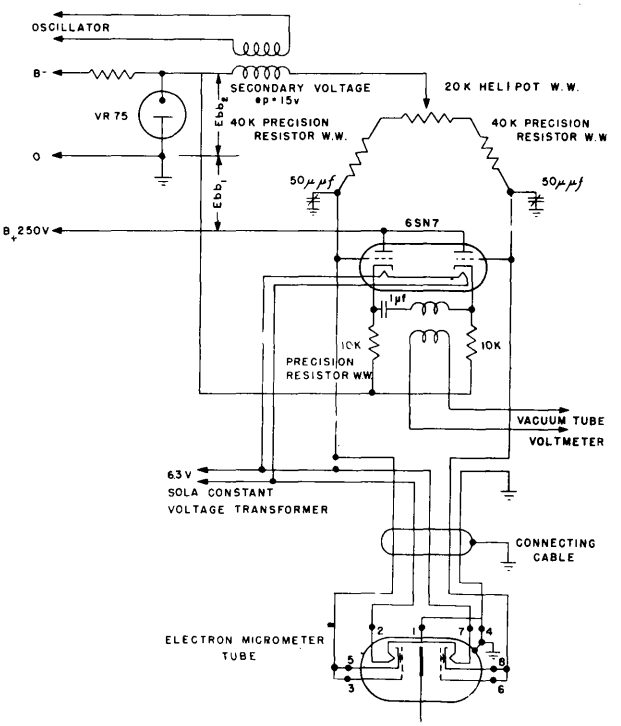

Figure 6-A-C Bridge Circuit with Cathode Follower Output Coupling

TABLE I

Sensitivity of the Electron Micrometer Tube

Circuit shown in Figure 4

$E_f = 6.3_v$

E_{bb} Volts	Microamps per Milliradian	Microamps per 0.001 inch with ½ inch stem
75	10.8	21.6
150	25.9	51.8
200	35.9	71.8
300	57.9	115.8

Circuit shown in Figure 5

$E_f = 6.3_v$ f = 400 cps

E_{bb} Volts	e_p Volts R.M.S.	Millivolts per Milliradian	Millivolts per 0.001 inch with ½-in stem	Best Zero Balance Millivolts
75	15	38.3	76.6	3 m.v.
150	15	40.4	80.8	1 m.v.
150	25	72.0	144.0	3 m.v.

Circuit shown in Figure 6

$E_f = 6.3_v$ f = 400 cps

$E_{bb}1$ Volts	$E_{bb}2$ Volts	e_p Volts RMS	Millivolts per Milliradian	Millivolts per 0.001 with ½-inch stem	Best Zero Balance Millivolts
250	75	15	458	916	15

stem (the shortest possible due to the construction of the tube) is also included in the table. The non-linearity of the plate characteristics of the tube gives rise to a small voltage reading at the balance point when a-c bridge excitation is used; and this reading is given in the column headed "Best Zero Balance".

The stiffness of the diaphragm is expressed as the torque required to produce a deflection of one milliradian, and while this factor will vary slightly from tube to tube, the figure for the average tube is 25 gram-cm/milliradian.

(2) Linearity

The deviation of the tube response from a straight line relationship is shown in Figures 7 and 8 for d-c and a-c bridge excitation respectively. The straight line relation from which the deviations are measured has been determined in a manner such that the algebraic sum of the deviations is zero and the sum of the squares of the deviations is a minimum. In Figures 7 and 8, the ordinates on the left are expressed in actual meter readings as obtained in circuits similar to those shown in Figures 4 and 5 respectively. The ordinates shown on the right give the deviations in terms of the percentage of a full scale deflection where a deflection from -15 to +15

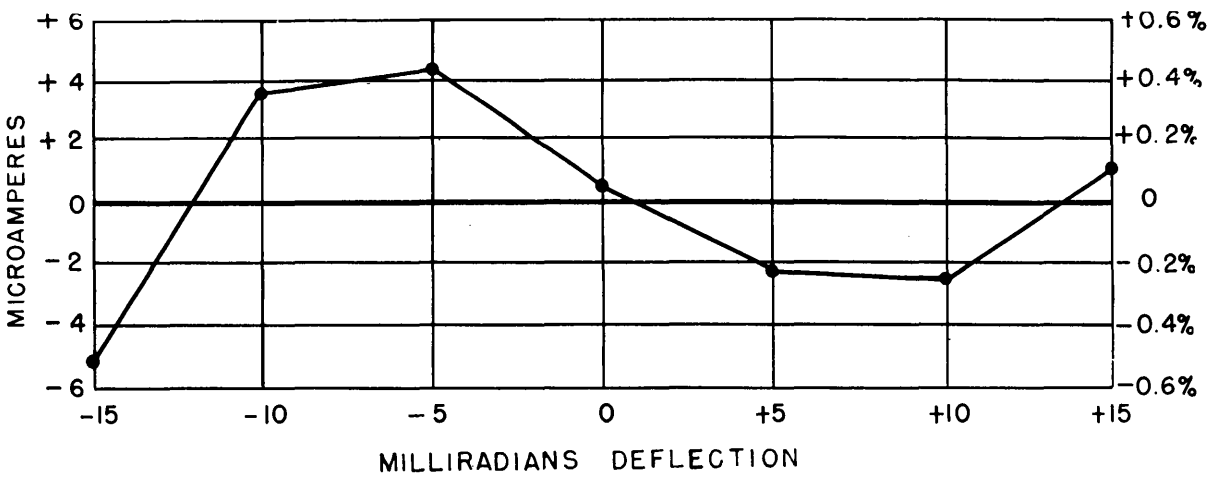

Figure 7-Linearity Curve using D-C Excitation

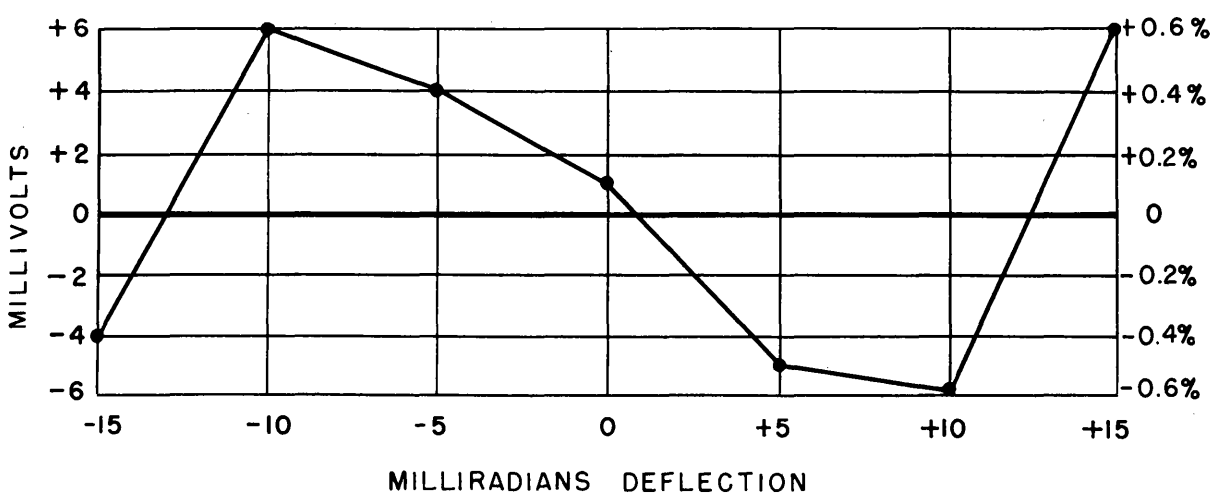

Figure 8-Linearity Curve using A-C Excitation

milliradians is considered as full scale. For example, the response of the circuit and tube used to obtain the graph of Figure 7 was such as to give 1,000 microamperes for a deflection from -15 to +15 milliradians; therefore a six microampere deflection is equivalent to 0.6 percent (6/100 x 100 = 0.6%). The percentage scale makes it possible to compare the response of the tube when used in various circuits.

The free position of the plate (mechanical zero) in a normal tube will not in general be the point at which the bridge is balanced electrically. In use, the bridge can be balanced either by mechanically positioning the plate or by unbalancing the resistance arms of the bridge. Where the tube is used in force measurements, the deflection limits from the mechanical zero point should not exceed 7 milliradians in order to avoid excessive hysteresis.

(3) **Stability**

The tubes are sufficiently stable for most uses, although there is considerable variation in the stability of different tubes. The instability is defined as the amount of angular deflection of the stem which will produce an indication equivalent to the indication resulting from the instability. This makes it possible to compare instabilities associated with different circuits. For example, an unbalance drift of 3 microamperes is approximately equivalent to a false deflection of 0.3 milliradians with $E_{bb} = 75_v$, whereas 10 microamperes unbalance is approximately equivalent to an error of 0.3 milliradians when $E_{bb} = 200_v$, (Figure 4).

Of the tubes tested, the best tube had drifts in 24 hours equivalent to approximately 0.02 milliradians (10^{-5} inch with a ½-inch stem) deflection, whereas the average tube will generally have drifts equivalent to as much as 0.1 milliradians in the same period. These figures give a general idea of how much drift may be expected over a long period of time. Most of the tests were made with a bridge voltage of 200 volts but in general it has been noticed that the lower the bridge voltage the better the stability. The a-c and d-c bridges perform about equally well with the same E_{bb} so far as stability is concerned.

The short period stability of the tubes also varied quite widely from tube to tube. Figure 9 gives a graph of the instability of the bridge balance with all conditions fixed, namely, E_f, E_{bb}, and the stem position. The noise level shown by the graphs would indicate a practical limit of approximately 0.01 milliradians as the smallest movement detectible with the tube.

CONCLUSIONS

The electron micrometer tube in its present stage of development has the advantages of simplicity and accuracy which make it a very useful tool for measuring or detecting small mechanical displacements. Any future improvements should be aimed at overcoming its main difficulty--inability to remain stable over a long period of time. A number of tests were made in an attempt to determine whether the long-period instability was caused mainly by emission changes or by thermal effects altering the relative position of

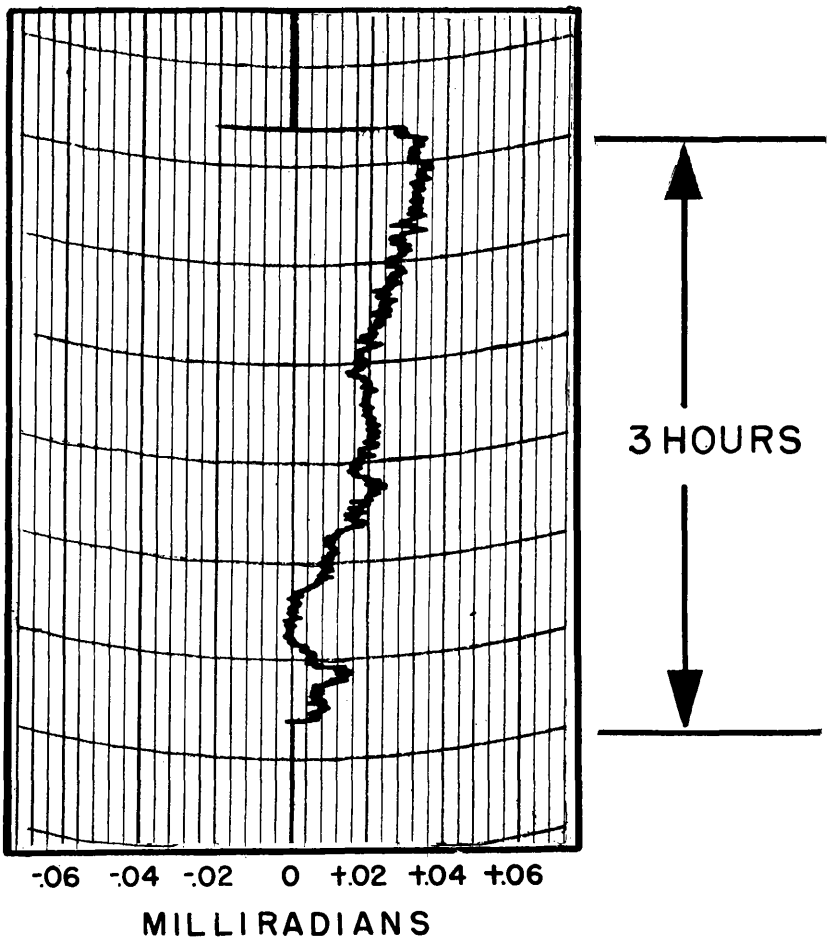

Figure 9- Typical Graph of the Stability of the Tube

the elements in the tube. Although these tests were not conclusive, they indicated that the thermal effects were the largest factor in causing drifts. Any future design should give further consideration to the influence of thermal effects (due to heat dissipation in the plate and grids) on the relative position of the tube elements. The tube might be more versatile if the electrode structure were such that the plate were not at the potential of the shell.

* * *