N R L REPORT NO. R-3177

THE RELAY INTERPOLATOR
A DESCRIPTION OF ITS OPERATION

B. L. Sarahan

Approved by:

J. J. Fleming, Head, Operational Research Section
Dr. R. M. Page, Superintendent, Radio Division III

Problem No. 36R54-04 September 25, 1947

APPROVED FOR PUBLIC
RELEASE - DISTRIBUTION
UNLIMITED

NAVAL RESEARCH LABORATORY
COMMODORE H. A. SCHADE, USN, DIRECTOR
WASHINGTON, D.C.

DISTRIBUTION

BuOrd Attn: Code Re4c	5
BuOrd Attn: Code Re9e	2
CNO Attn: Code Op-413-B2	3
CNO Attn: Op-34-E4	1
CO, ONR, Boston	1
Dir., USNEL	2
NORTLO, MIT	1
OinC, BOEU, BuStandards	1
OinC, NODU, APL	1
ComOpDevFor Attn: Gunnery Officer	2
CO, NATMC, Pt. Mugu Attn: Lt. Comdr. Winn	1
CO, NOTS, Inyokern Attn: Dr. Cooper	1
Cdr., NATC, Patuxent River Attn: Lt. Cdr. E. David	2
OCSigO, Ch. Eng. & Tech. Div. Attn: SIGTM-S	1
CO, SCEL Attn: Dir. of Engineering	2
RDB Attn: Library Attn: Navy Secretary	 2 1
Science and Technology Project Attn: Mr. J. H. Heald	2

CONTENTS

Abstract	iv
INTRODUCTION	1
GENERAL OPERATION	2
COMPONENT PARTS	5
Relay	5
Teletype Equipment	6
FUNCTIONAL DESCRIPTION OF CIRCUITS	10
Number Registers	10
Adder Circuit	15
Master Control Circuit	19
Input Data Circuit	26
Output Data Circuits	29
ACKNOWLEDGEMENTS	33
APPENDIX I - OPERATIONAL DESCRIPTION OF CIRCUITS	
REGISTER CIRCUITS	35
Function	35
Circuit Explanation	35
REGISTER CONTROL CIRCUIT	36
Number Transfer from Register to Adder	36
Number Transfer of Adder Sum to a Register	37
Carry-in Control to Adder	37
ADDER CIRCUIT	37
Circuit Operation	37
MASTER CONTROL CIRCUIT	38
General Operation	38
Alarm Circuits	40
Step-by-Step Operation	40
(A+B) Operation	40
INPUT DATA CONTROL CIRCUIT	41
Start Operation	41
Setting Zeros in P, Q, R, and S Registers	41
The Transfer Identification Code	42
Transfer Control to Master Control Circuits	43
Ten's Registration	43
Tape Contact Transfer	44
Unit's Registration	44
Transfer of Number to Adder	45
Space Between Data Points	45

CONTENTS (Con'd)

OUTPUT DATA CONTROL CIRCUIT 46
Printing Tape Identification Data 46
Thirty Segment Translator 47

PRINTER CONTROL CIRCUIT 49
Printing Carriage Return and Line Feed 49
Printing Three Spaces 51
Printing Numbers From P Register 51
Alarm Feature 52

EIGHT-SEGMENT TRANSLATOR CIRCUIT 52

BINARY TRANSLATOR CIRCUIT 53

APPENDIX II - PREPARATION OF TAPES FOR DYNAMIC TESTER MODEL I

INTERPOLATION METHOD 57

CORRECTION AND SMOOTHING OF DATA 60

OPERATIONAL SEQUENCE TAPES 61

APPENDIX III - PREPARATION OF TAPES FOR DYNAMIC TESTER MODEL II

INTERPOLATION METHOD 67

OPERATIONAL SEQUENCE TAPES 69

ABSTRACT

The Relay Interpolator is a digital-type relay calculating machine developed by Bell Telephone Laboratories, Inc. under NDRC Contract No. OEMsr-1160. Upon the reception of proper instructions from a control unit, it is capable of performing certain computational processes automatically and recording the numerical results on a standard teletype printer. Relay circuits are provided so that the numerical results may be translated into special codes and perforated on standard teletype tape. The primary purpose of the Relay Interpolator is to prepare tapes for the various Tape Dynamic Testers which were developed to aid in the evaluation of gun fire control equipment. This report gives a description of the mathematical operations performed by the Relay Interpolator and indicates the basic principles involved in its design. Detailed descriptions of each circuit are included in an appendix for the benefit of those working with the machine. Additional appendixes deal with the mathematics of sub-tabulation as applied to the requirements of the Tape Dynamic Testers.

THE RELAY INTERPOLATOR - A DESCRIPTION OF ITS OPERATION

INTRODUCTION

To aid in the operational evaluation of antiaircraft gun fire control systems, several kinds of dynamic testers have been built in recent years. The latest type of tester for this purpose is the Tape Dynamic Tester Model II designed and built by Bell Telephone Laboratories *. Such a device controls the inputs to the fire control system being evaluated by means of teletype-tape records representing the target's course. It simultaneously compares the outputs of that system with correct firing data previously computed for the course. The latter information is also placed in the tester in teletype tape form. Differences revealed by the comparison of true and actual outputs are recorded graphically on continuously moving charts. The construction of the special teletype tapes required is the primary function of the Relay Interpolator.

In the preparation of these special tapes the Relay Interpolator is required to perform certain mathematical operations, such as, the addition or subtraction of two numbers, or the multiplication of a number by a constant. The course data supplied to the Relay Interpolator have been previously calculated by manual methods for every second of the target's flight. The calculating circuits of the Relay Interpolator are designed so that intermediate points at either one-twentieth or one-sixtieth of a second are automatically interpolated. After each such interpolation, the numerical result is coded by one of the translation circuits, and the coded result is recorded in perforated form on standard teletype tape. Once the Relay Interpolator is set up for a particular sequence of operations, it will operate continuously as long as input data are supplied to it. In performing these operations, the device takes the place of several individuals using calculating machines such as the Monroe or Marchant. It has been possible through proper design to eliminate almost all sources of error in the computing and recording circuits.

The Relay Interpolator consists of about five-hundred standard telephone-switchboard relays and several pieces of slightly modified teletype apparatus. The calculation, translation, and control circuits consist entirely of such relays joined together by wires in such a way that particular mathematical or computer-control operations are performed, when the initiating relay of the particular circuit is energized. The teletype instruments are used to insert numerical data into the relay circuits and to extract such data from the relay circuits for recording purposes. A teletype transmitter is also used to send

---

* For a complete description and operating instructions of a Tape Dynamic Tester particularly applicable to evaluation of Navy fire control Systems, see Bell Telephone Laboratories, Inc., Instruction Manual X-75225, issue 2, "Tape Dynamic Tester Model II," March 1, 1946 (Confidential).

the instructions of the operational sequence to the control circuits of the Relay Interpolator. The purpose of this report is to give a general description of the Relay Interpolator. Appendix I is a more detailed description of the circuits of the Relay Interpolator for the use of those using the calculating device. Appendixes II and III contain the development of the sub-tabulation equations, and their application to the Relay Interpolator †.

The Relay Interpolator was developed under NDRC Contract No. OEMsr-1160 and was first placed in operation at Bell Telephone Laboratories, 463 West Street, New York City on 15 September 1943. From that time until 1 October 1945, it remained in more or less continuous operation on work of interest to the National Defense Research Committee. It was shipped in November 1945 to the Naval Research Laboratory, where it is now being used by the Operational Research Section of Radio Division III. Most of the computational hours are devoted to the manufacture of teletype signal tapes for the Tape Dynamic Testers built by Bell Telephone Laboratories. Additional tapes are prepared for a dynamic tester of airborne fire control equipment, designed by the Military Physics Research Laboratory of the University of Texas.

GENERAL OPERATION

In order to produce the tapes required by the different types of Tape Dynamic Testers, the Relay Interpolator must be capable of performing the following general operations:

a) Interpolate intermediate data points to a predetermined fraction of a given time interval (usually to one-twentieth of a second or one-thirtieth of a half-second).

b) Translate the computed numerical data to corresponding codes for perforation on five-hole teletype tape.

c) Translate the computed numerical data to one of two corresponding codes for perforation on six-hole teletype tape.

The codes of requirements (b) and (c) are different, and translation circuits for each of the code systems must be part of the Relay Interpolator. The reason for these various translation circuits is the existence of different types of Tape Dynamic Testers. Some of these testers require signals obtained from five-hole teletype tape, and others require six-hole tape. Five-hole tape is eleven-sixteenths of an inch wide, and it is possible to have a maximum of five circular perforations in each one-tenth inch transverse section of tape. The six-hole tape is similar, except that it is seven-eighths of an inch wide, and there may be a maximum of six circular perforations in each one-tenth inch transverse section of tape. (See Figure 1 for examples of both types of tape.)

An investigation of the accuracy requirements of the dynamic testers indicates that linear interpolation for intermediate points is not sufficiently accurate. The interpolation method which is used consists of the process of sub-tabulation involving first, second, and third differences. Assume that the values of a function for successive one-second intervals of time are P_0, P_{20}, P_{40}, P_{60}...., and it is desired to find intermediate

---

† A detailed examination of the mathematical capabilities of the Relay Interpolator is contained in OSRD report No. 4996 (Applied Mathematics Panel report 171.1R) "Relay Computers", by G. R. Stibitz, February 1945 (Restricted)

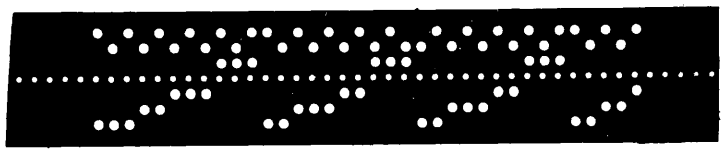

DYNAMIC TESTER MODEL II COURSE TAPE
(ILLUSTRATING SIZE OF SIX-HOLE TAPE)

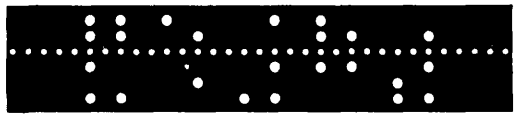

1 2 3 4 5 6 7 8 9 0

NUMERICAL CODING FOR RELAY
INTERPOLATOR INPUT TAPE
(ILLUSTRATING SIZE OF
FIVE-HOLE TAPE)

Figure 1 - Six-hole and Five-hole Tapes

values between P_0 and P_{20}, corresponding to successive one-twentieth of a second time intervals. Assume also that suitable first, second, and third differences for a time interval of one-twentieth of a second are available. By combining these differences properly, a value for the point P_{40} may be determined from the P_0 value. This extrapolated value will not in general agree with the given value of P_{40}, and an error quantity is obtained. The first, second, and third differences are corrected on the basis of this computed error, so that, if the value of P_{40} were again calculated, the computed value of P_{40} would agree more closely with the given value of that point. A smoothing constant is applied to each of the difference-correction terms to insure the continuity of the interpolated values. The corrected differences are then applied to P_0 to obtain P_1, which is the value of the function one-twentieth of a second later in time than P_0. This process is followed until the value corresponding to P_{20} has been computed. The entire routine is then repeated: the value of point P_{60} is extrapolated from P_{20}; the differences are corrected on the basis of the discrepancy between the computed and given values of P_{60}; and, intermediate points are interpolated from P_{20} to P_{40}. The interpolation to one-sixtieth of a second is accomplished in much the same manner except that the given values correspond to one-half second intervals of time, and the interpolation is carried out to one-thirtieth of the given time interval.

In order to accomplish this interpolation procedure, the Relay Interpolator must be able to place the data points (P_0, P_{20}, P_{40}....) into the computing circuits as the successive values are required; to retain temporarily the current value of the function, the three difference quantities, and the error quantity; to add any two of the registered numbers; to multiply any of the registered numbers by a numerical constant; and, to refer each of the computed values to the proper translation circuit for coding and recording. The additional operations required by the three translation circuits will be described later.

The block diagram of Figure 2 is a representation of the final circuit relationships of the Relay Interpolator. It indicates one way in which the requirements set forth in the preceding paragraphs can be met. It should be understood that the establishment of the circuit relationships indicated in the drawing was not as simple as the relationship between mathematical requirements of the Relay Interpolator and the figure would seem to indicate. The circuits of the Relay Interpolator were modified from the original design as problems which could not be solved with the first design were encountered. There have been three major additions or changes to the original design: the capacity of the memory registers was increased as differences larger than those originally expected were encountered; the teletype printer and its control circuit were added to enlarge the scope of problems which could be handled by the Relay Interpolator; and, the binary translator and the eight-segment translator circuits were added after the existence of such circuits was made necessary by the design and construction of the Dynamic Tester Model II by the Bell Telephone Laboratories.

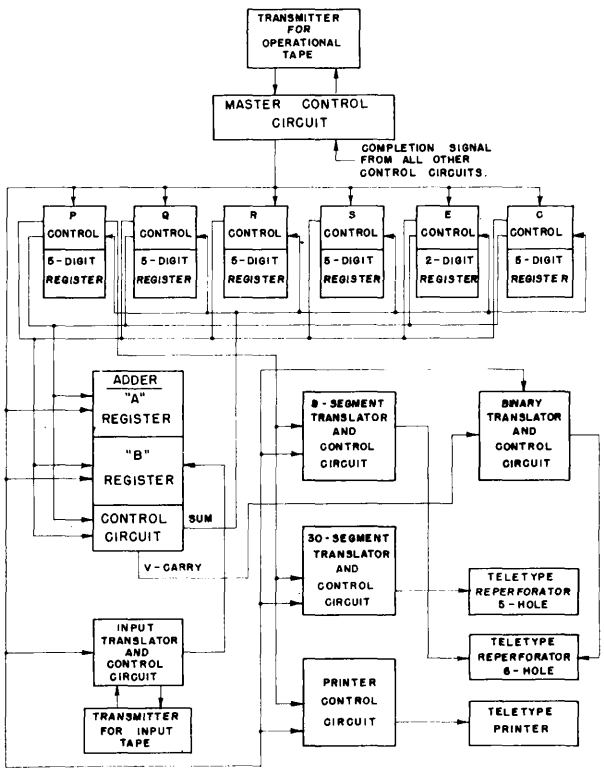

Figure 2 - Block Diagram of Relay Interpolator

The Master Control Circuit is indicated by the first block of the diagram of Figure 2. This circuit unites all other circuits into a device which automatically solves equations. It designates the particular sequence of operations necessary for the solution of a given equation and initiates the operation of each of the other circuits of the Relay Interpolator. The master control circuit is the top control level of the Relay Interpolator and is subject to the human operator only in its need for a tape upon which the given equation is recorded in a form recognizable by it. Once this tape is in position and the Relay Interpolator started the master control circuit will serve as the controlling agent in the operations performed by the Relay Interpolator. This is represented in the block diagram by the lines leaving the master control circuit block and leading to all other circuits of the Relay Interpolator. It may also be noted that an incoming arrow is designated "Completion signal from all other control circuits." This indicates a second level of control, and such is actually the case. Each circuit has a special control circuit to guide its operation. When the master control circuit signals one of the subordinate circuits, the appropriate secondary control circuit receives the signal and causes the desired operation to be performed. Upon the completion of the desired operation the subordinate control circuit signals the master control circuit to that effect, and the master control circuit is then free to give another instruction signal. In a sense, the Relay Interpolator has a one-track mind: it cannot begin thinking of the next operation until it has been assured that the present operation has been completed satisfactorily.

The second row of blocks in Figure 2 represents the circuits which provide the Relay Interpolator with a number memory. It has previously been indicated that

facilities must be provided for "storing", or retaining, the present value of the function; the first, second, and third differences; and, the error value. The P, Q, R, S, and E memory registers have been designed to retain these quantities. Each register has a capacity of five digits, except the E register, which has only a two-digit capacity. The function of these circuits is simply to retain a number until it is required in some later step of the calculation. This operation is similar to that performed by the human calculator, when he records an intermediate result by writing it on paper. The recording and the extracting of numbers from these circuits are accomplished under the initiating control of the master control circuit and under the actual control of the secondary circuit attached to the particular register concerned. The C register is similar to those already described and is used in conjunction with the adder circuit when performing multiplications of variables by constants.

The adder circuit consists of two five-digit memory circuits and a control circuit. When it is desired to obtain the sum of two numbers, it is necessary to place one of the numbers in the "A" memory register and the other in the "B" register. This transfer of numbers within the Relay Interpolator is, of course, accomplished under the initiating control of the master control circuit and the secondary control of the sending register and the receiving register of the adder. The sum of the two numbers in the adder circuit may be sent under further instructions from the master control circuit to any of the six memory registers. The signal to record a new number in a register always means that the number recorded there is first erased. Numbers coming from the input problem tape are transferred to the "B" register of the adder upon an appropriate signal from the master control circuit.

Numbers from the P register may be transferred to the eight-segment translator circuit for use in obtaining perforated codes on six-hole teletype tape; to the thirty-segment translator circuit for use in obtaining perforated codes on five-hole teletype tape; or, to the printer-control circuit for recording by a teletype-printer unit. Part of the sum of the adder, designated "V-carry" digit, is the input to the binary translator circuit, which is used to translate the true gun order output quantities to proper codings prior to perforating the coded signal on six-hole teletype tape for use with the Dynamic Tester Model II.

COMPONENT PARTS

Relay

The characteristic unit in the Relay Interpolator is the standard U-type relay used in telephone systems. This device is essentially an electrically operated switch. In its simplest form, the relay consists of a wire-wound iron core and an armature. When a current is passed through the wire, the iron core becomes an electromagnet and attracts the armature. As the armature moves, it, in one case, causes an insulated metallic spring to flex and to touch a fixed point; thus, an electrical path from the spring to the fixed contact is completed. This type of relay has two stable positions: the "off" position, in which case the magnet is not energized, and the armature rests against the backstop; and, the "on" position, in which case the magnet is energized, and the armature rests against the front stop. The importance of such an electrical switching device is realized when one recognizes the fact that the contacts of several relays may be connected in various ways to form a single circuit. A number of these relays plus the associated necessary wiring form the calculating, storing, and control units of the Relay Interpolator.

The U-type relay was selected because it had already proved its ruggedness and dependability in the uses of telephone work. The average relay is about four and a half inches long, one and a half inches high, and one inch wide. A photograph of one of the relays is shown in Figure 3. There is a wire-wound iron core centrally placed and running the length of the relay. The fixed and movable springs are arranged along the top and bottom of the relay with usually about six combinations on the top and six on the bottom. The movement of the armature is transmitted to the movable springs through hard-rubber studs. The springs run the entire length of the relay with the contact points at the front and connection terminals at the rear of the relay. The rear of the relay also contains terminals for attaching the battery and ground leads used to energize the relay.

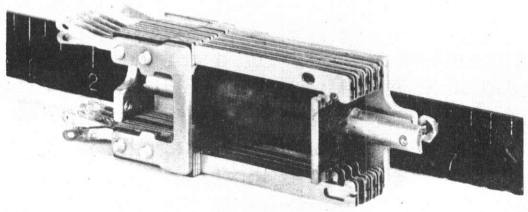

Figure 3 - V-Type Relay

The particular combination of springs used on a given relay is determined from the purpose of the relay in the circuit. The various types of combinations used in the relays of the Relay Interpolator are as follows:

(a) Make: This type of contact consists of one fixed and one movable spring with the latter so connected to the armature that when the armature moves, following the energizing of the relay coil, the movable spring is forced to make contact with the fixed spring.

(b) Break: This type of contact consists of one fixed and one movable spring with the latter so connected to the armature that when the armature moves, following the energizing of the relay coil, the movable spring is forced away from the fixed spring.

(c) Break-make: This type of contact consists of one movable and two fixed springs with the former so connected to the armature that when the armature moves, following the energizing of the relay coil, the movable spring is forced away from one fixed spring and into contact with the other fixed spring.

(d) Make-before-break: This type of contact consists of one fixed and two movable springs with the latter so connected to the armature that when the armature moves, following the energizing of the relay coil, the first movable contact is forced to make contact with the second movable contact and at the same time forces the second movable contact away from the fixed point.

The circuits designed for the Relay Interpolator make use of four hundred and ninety-three U-type relays. These relays are mounted in two standard relay-rack frames, seven feet high and twenty-three inches wide, (Figure 4). The two frames are bolted together and stand on a wooden base measuring two feet by five feet. A control panel, mounted in the middle portion of one of the frames, containes several lever-type keys which are used for controlling the operation of the Relay Interpolator. Several lamps are also provided on this panel for the display of numbers already in the computing circuits, or numbers that are being read into the Relay Interpolator. Directly beneath the main control panel, there is a panel for the plug-sockets, through which the various pieces of teletype equipment are connected to the relay circuits.

Teletype Equipment

The relay is capable of handling all of the computational and control operations required in the problem described in the first paragraphs of this report, but it cannot

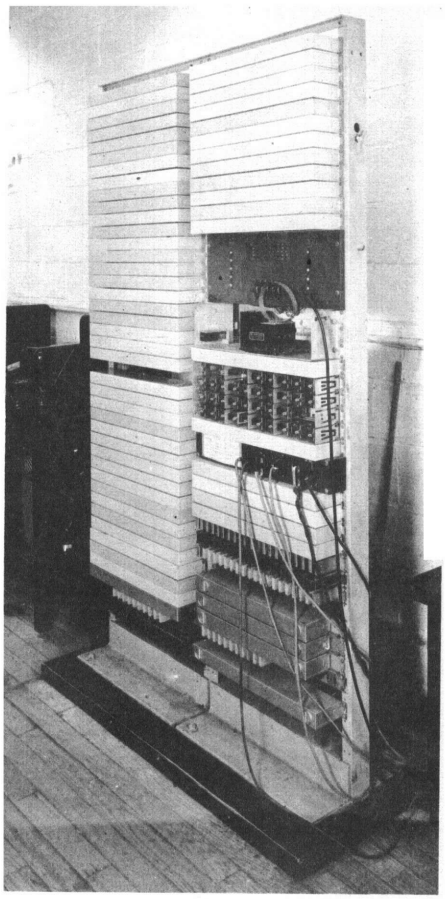

Figure 4 - Relay Interpolator

place numbers in or extract numbers from the circuits of the Relay Interpolator. For these two operations it is necessary to employ certain standard teletype equipment. There are nine pieces of sending and receiving apparatus connected to various circuits of the Relay Interpolator, as indicated schematically in Figure 5. A picture of the teletype equipment is included as Figure 6.

The 14A-Type Five-Hole Tape Perforator Unit (Figure 7) is used to perforate tapes representing the desired input quantities of the given equation. In the manual method of calculation the calculator can read the input values from a data sheet. The mechanical calculator requires the same information, but in a form that can be read, or sensed, mechanically. An operator uses the perforator to transcribe written numerical data to the form of perforated codes on teletype tape. The keyboard of the perforator has keys designated with the numbers zero to twenty-nine. In typing numerical data, the operator uses the keys from zero to nine only. The remaining keys are used in preparing the operational tape, which will be described later. The operator performs the transcription of numerical data in the same manner as a typist. The combination of perforations corresponding to a particular digit is punched on the tape by the perforator, when the operator depresses the proper key lever. The actual preparation of an input tape will be explained in a later paragraph.

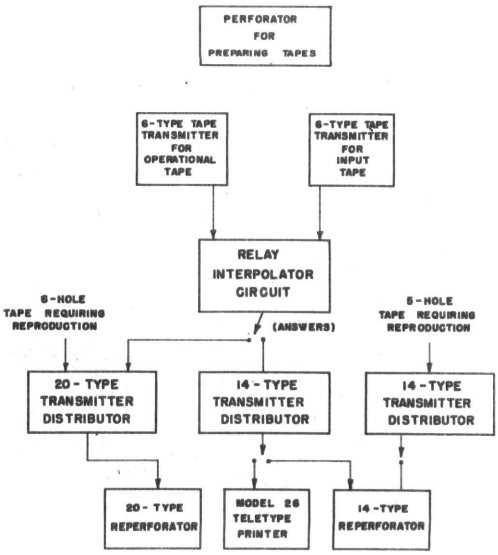

Figure 5 - Sending and Receiving Apparatus Associated with Relay Interpolator

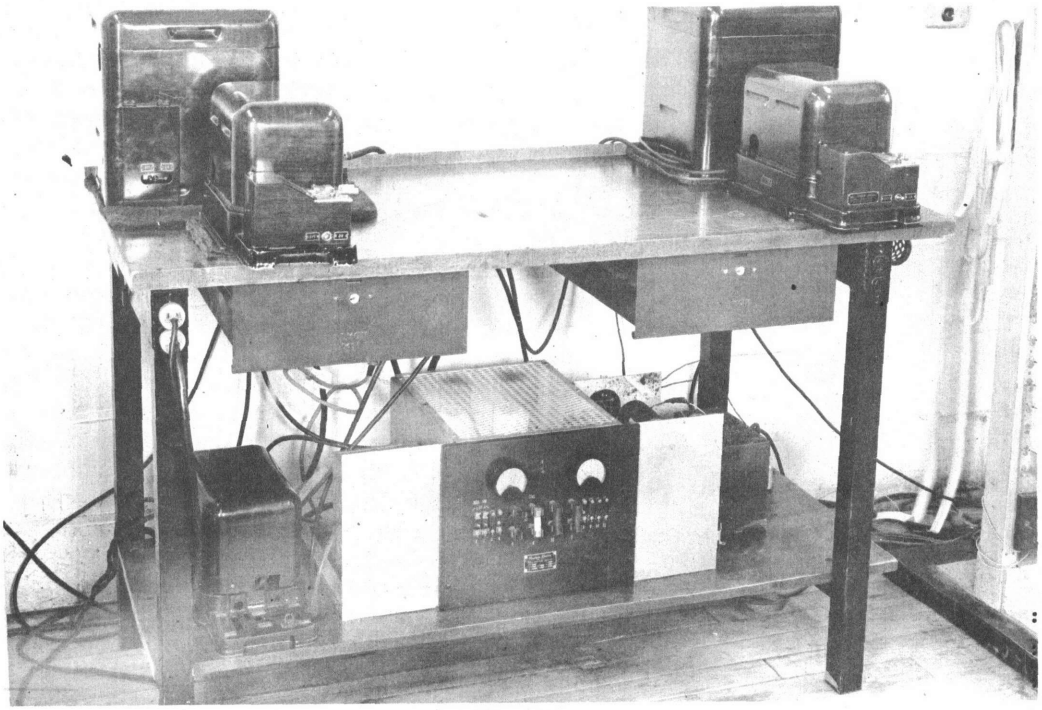

Figure 6 - Teletype Equipment and Power Supply for Relay Interpolator

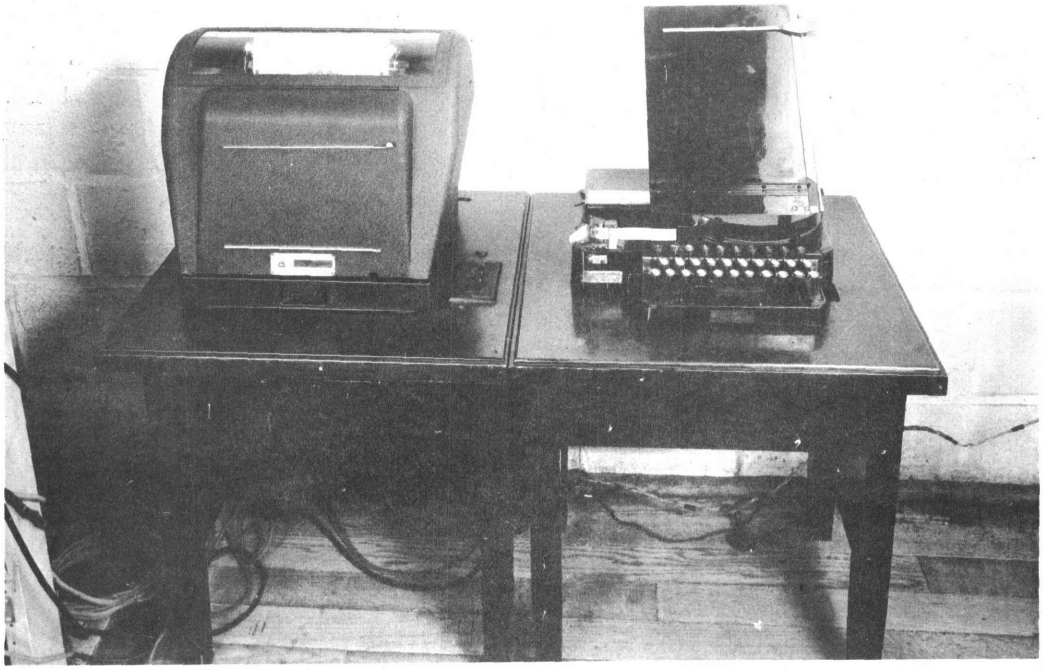

Figure 7 - Model 26 Teletype Printer and 14A-Type Five-Hole Tape Perforator Unit

The input tapes prepared on the perforator are, when it is desired to put that particular problem on the Relay Interpolator, placed on a 6-Type Tape Transmitter. This transmitter is a device which is used to translate code combinations, appearing as perforations on a teletype tape, into electrical impulses and to transmit these impulses to the line, which in this case is connected to the Relay Interpolator proper. The device is equipped with a set of five mechanical fingers which, when the transmitter is instructed to read, examines the portion of tape directly above the fingers. If one of the mechanical fingers passes through a perforation in the tape, an electrical impulse is transmitted to the receiving unit. If there is no perforation in the particular portion of the tape examined by one of the fingers, no impulse will be given. The receiving unit consists of five sets of relays, each set corresponding to one of the five fingers of the tape transmitter. These relays are operated from the electrical impulses coming from the corresponding mechanical finger. For example, if the tape contains perforations in the a, b, and c positions with blanks in the d and e positions, the examination of that portion of the tape by the mechanical fingers results in electrical impulses causing the operation of the A, B, and C sets of relays only. An example of this tape and coding has been given as Figure 1. When the proper sets of relays have been operated, the tape transmitter causes the tape to advance to the next reading position. The signal for this device to read causes the operation of a solenoid magnet, which is connected to the mechanical fingers in such a way as to force them to examine the tape whenever the solenoid is energized. The solenoid is controlled by the incoming data control circuit of the Relay Interpolator. A second transmitter of this type is used to read into the Relay Interpolator the master control instructions, which are in perforated code form on a circular teletype tape. These transmitters are identical.

The 14-Type Transmitter Distributer is a motor driven device which translates code combinations previously perforated in a paper tape into electrical impulses and transmits these impulses to one or more receiving stations. The transmitter distributor is similar in purpose to the tape transmitter, but it is able to send the five signals of a code over a single wire, instead of requiring a separate line for each of the five signals, as in the case of the simple transmitter. In addition, the tape transmitter must have a definite signal to read, while the motor drive of the transmitter distributor causes that device to send continuously. The type of teletype tape used is eleven-sixteenths of an inch wide and has provision for five possible circular perforations for each one-tenth inch transverse section of tape. This device is used to send tape signals to either the 14-Type Reperforator or Model 26 Teletype Printer. The 14-Type Teletype Reperforator is a motor-driven tape-perforating machine, which receives electrically transmitted signals and translates these signals through the medium of selecting and perforating mechanisms into code combinations of holes in a paper tape. There are two uses made in the Relay Interpolator of this piece of equipment. It is used in connection with the 14-Type Transmitter Distributor to obtain corrected copies of tapes manually perforated on the perforator unit. In this case, the tape is allowed to feed through the distributor until a known error is encountered, at which point the distributor is halted by the operator who inserts the correction. After the corrected portion has been run off, the operator returns to the original tape until another error is encountered, and the process is repeated. As the transmitter distributor reads the codes appearing on the tape, it translates them into electrical impulses and sends them over a single line to the reperforator, which translates the electrical impulses into mechanical settings and causes a tape to be punched with the proper code signal. The second use of the reperforator unit occurs in the extracting of numerical data from the Relay Interpolator. In this case a second transmitter distributor is made to pick up signals, representing the coding of a particular setting of the number relays of the P register of the Relay Interpolator. These signals are sent to the reperforator, and a tape is punched representing the "answers" obtained from the solving of the given equation by the Relay Interpolator.

The 20-Type Transmitter Distributor and the 20-Type Reperforator perform the same functions as the 14-Type devices described above, except that these units are designed to operate with a tape that is seven-eigths of an inch wide and has provision for six possible circular perforations for each one-tenth inch transverse section of tape. The distinction between the five- and six-hole units will be made clearer when the particular uses of the Relay Interpolator are described.

The Model 26 Teletype Printer (Figure 7) used by the Relay Interpolator is modified to the extent that its sending mechanism has been eliminated. This modification was possible, because the printer unit is only required to pick up signals from a 14-Type Transmitter Distributor. The transmitter distributor receives its impulses from the relay settings in the printing section of the Relay Interpolator. The signals as received by the printer unit are translated to unique positions of the type wheel, and the proper number is printed. The primary purpose of the Model 26 Printer is to provide a means of recording the numerical results obtained by the Relay Interpolator during the course of a series of calculations.

The Model 26 Teletype Printer is mounted on a small table, and the other teletype apparatus is located on a work table measuring five feet by two and a half feet, and about three feet high. There is a shelf along the bottom of this table upon which is mounted a standard fifty-volt, eight-ampere, half-wave, thyratron rectifier unit, which is the d-c supply for operating the Relay Interpolator equipment. The driving motors of the teletype equipment are supplied with 110 a-c from a wall plug.

FUNCTIONAL DESCRIPTION OF CIRCUITS

The relay and the teletype equipment just described are connected by suitable wiring into the following five principal circuits: number-register, adder, master control, input-data control, and output-data control. As indicated in the introduction, the following functional description of these circuits is intended for those who are interested only in the engineering ideas and basic mathematical operations of the Relay Interpolator. The operational description (contained in Appendix I) is intended primarily for those who are engaged in operating or maintaining the Relay Interpolator.

Number Registers

A number-register circuit consists of a suitable number of relays so connected and interconnected that a number can be placed in the circuit, retained there indefinitely, and transferred back into the calculating circuits upon suitable instructions from the master control circuit. This circuit performs the same operation that the human calculator performs when he writes down an intermediate answer, on a piece of paper thereby retaining it for some later stage in the calculation. If one takes the fundamental element of the Relay Interpolator, the off-on type of relay, and considers the problem of number representation carefully, it is obvious that the simplest way in which a single digit may be represented uniquely is to employ ten relays, one of which is designated 0, the second 1, and so on up to 9. A particular digit is registered by the operation of one of the ten relays, and the inoperation of the other nine relays. In this set of ten relays, the number 2 is registered by the operation of the relay designated "two". The other nine of the set of ten relays are not operated. Any five-digit number may be represented by a bank of fifty such relays. One of each of the five sets of ten relays would be operated to represent a unique five-digit number. This idea is illustrated by the following diagram:

Relays

	0	1	2	3	4	5	6	7	8	9
1st digit	-	-	-	-	-	x	-	-	-	-
2nd digit	x	-	-	-	-	-	-	-	-	-
3rd digit	-	-	-	-	-	-	-	-	x	-
4th digit	-	-	x	-	-	-	-	-	-	-
5th digit	-	-	-	-	-	-	x	-	-	-

Each of the five digits has a set of ten relays associated with it. Each of the relays of a set is designated by a particular number from zero to nine inclusive. An operated relay is designated by the symbol x while an unoperated relay is designated by a dash. The operated relays in the above group indicate that the five-digit number 50826 is stored in this particular register circuit.

In the registration of numbers on the decimal system, as illustrated above, fifty relays are required to register a five-digit number. In each registration of a five-digit number only five of the fifty relays are operated, one in each of the five sets of relays. A definite saving of relays may be accomplished by adopting a slightly different number notation. The biquinary number notation consists of two separate notations, which when taken together may represent any number in the decimal system. The binary part is the answer to the question "Is the decimal number which is to be translated into the biquinary system within the interval 0 to 4 inclusive, or within the interval 5 to 9 inclusive?" If the number lies within the former interval, the proper answer to the question is represented by the symbol 00. If the number lies within the latter interval, the representation is 5. The quinary part is the answer to the question, "How much greater than zero or five is the decimal number that is to be translated into the biquinary system?" The answer to this question may be either 0, 1, 2, 3, or 4. The complete relationship between the decimal and the biquinary number systems is given below:

Decimal Notation	Biquinary Notation
0	00 and 0
1	00 and 1
2	00 and 2
3	00 and 3
4	00 and 4
5	5 and 0
6	5 and 1
7	5 and 2
8	5 and 3
9	5 and 4

While it then requires ten unique symbols to represent the ten numbers of the decimal system, the biquinary notation requires only seven unique symbols to accomplish the same purpose. A diagram, indicating the registration of the number 50826 in the biquinary notation, follows:

Relays

	00	5	0	1	2	3	4
1st digit	-	x	x	-	-	-	-
2nd digit	x	-	x	-	-	-	-
3rd digit	-	x	-	-	-	x	-
4th digit	x	-	-	-	x	-	-
5th digit	-	x	-	x	-	-	-

Each of the five sets of relays now contains only seven relays. Each of the relays of a set have one of the designations: 00, 5, 0, 1, 2, 3, or 4. An operated relay is designated by the symbol x, while an unoperated relay is designated by a dash. A five-digit number may be uniquely registered with thirty-five relays instead of the fifty required by the straight decimal notation. In the biquinary notation ten of the thirty-five relays are operated for the registration of any given five-digit number.

Other number notations may be adapted to number registration by relays. Some of these notations require even fewer relays to register uniquely any given number, but this is usually balanced by an increase in the relay equipment needed to perform the translation from the decimal notation to the other notation, and vice versa. The biquinary notation was used in the Relay Interpolator, because it enabled a definite saving of equipment over the decimal notation, and at the same time complicated equipment was not needed to accomplish translations between the two notations, nor were certain positive checks on the circuits eliminated by its use. An example of a positive check is as follows: In the biquinary system one of the binary relays and one of the quinary relays must be operated to register a digit. It is possible to check at each step of a circuit's operation that such is actually the case. This constitutes a positive check on the circuit's operation. It is also possible to clear the entire register before a new number is registered and to provide a check that all thirty-five relays have actually released. Some number notations depend upon a non-operated relay for a number indication. For example, no relay of a set operated may represent a zero. In this case, positive checks of the circuit are impossible, since it is never certain whether the zero is the correct number, or whether relays failed to operate because of circuit difficulties. The translation between the decimal and biquinary notation is easily accomplished. The basic circuit involved in the translation is given in the diagram of Figure 8. The quinary relays are provided with two separate coils. One of the coils is connected in series to the winding of the 00 relay, and the other is connected in series to the winding of the 5 relay. The translation from the decimal to the biquinary notation is simple and automatic. In the complete system of number registration, as exemplified by the register circuits in the Relay Interpolator, the process of storing a number is as follows: A signal from the master control circuit is the indication that a number from the adder circuit is to be placed in a particular register. All register circuits in the Relay Interpolator receive the number which they are to store from the adder circuit, and that number represents the sum of the two numbers in the adder at the time. In the register circuit itself a control relay operates on the reception of the signal from the master control circuit and causes the release of all operated relays in the receiving register circuit. Upon the release of all relays there is a down-check, which means that a signal has successfully been sent through each of the thirty-five register relays, passing through relay contacts which are touching only when each of the relays is in a non-operated position. This check signal is received by another control relay, which operates, causing the connection of the sum leads from the adder to the leads of the thirty-five relays of the number register. A check is now made electrically that one of the two binary relays and one of the five quinary relays are operated in each of the five sets. If this signal passes successfully through the five sets of relays, it serves as the

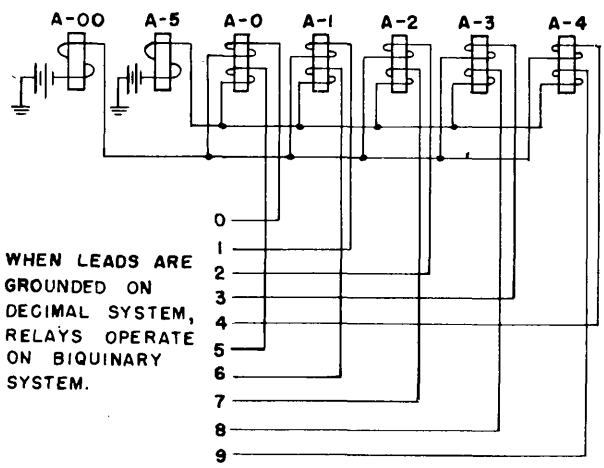

Figure 8 - Basic Circuit for Translation Between Decimal and Biquinary Notation

"operation completed" signal to the master control circuit. The master control circuit must wait for this signal before it can advance to the next operation. It is important to note two things in this description:

(a) The integration of all operations into a structure that is designed to prohibit departures from the prescribed routine. One circuit can operate only on the completion signal from the preceding operation. This is true within the number register itself, as well as in the connection between the master control circuit and the number-register control circuit.

(b) The type of check that has been employed to secure the highest degree of accuracy. The two checks are the up-check, which insured that at least one quinary and one binary relay in each set were operated; and, the down-check, which checked that none of the register relays were being falsely held operated prior to the registration of a new number. A third type of check is employed in each circuit to make sure that only one binary and one quinary relay are operated for each digit.

When a number has been placed in a number register, it will remain locked in the relay circuits until it is replaced by another number. During the period in which the number is locked in a number register, it is possible to transfer the number to either the "A" or "B" parts of the adder circuit. During this transfer, the number may be shifted a given number of places to either the right or left. For example, if the number in the Q register is 63546, it will, under one instruction of the master control circuit, be transferred to the adder circuit as exactly 63546. Under another instruction of the master control circuit, the number may be shifted to the "B" part of the adder as 35460, each number having been shifted one place to the left and a zero inserted for the missing fifth digit. It should be observed that in this case the 6 has been lost. It is the duty of the operator designing the sequence of operational instructions to prevent such occurrences except where they are intentional. The various specific functions performed by each of the registers will be noted in the following descriptions of the individual register circuits. There are six register circuits in the Relay Interpolator each of which operates basically as the circuit just described.

The P register is capable of storing a five-digit number and is used principally for storing a particular value of the function into which an interpolation is being made. There are three controls in the master control circuit, which involve this register circuit. The first signal, DP, causes the P register to release the registered number and to accept the summation of the two numbers in the adder circuit at that time. The second signal, PA, causes the number in the P register to be transferred to the "A" part of the adder circuit. The third signal, PB, causes the number in the P register to be transferred to the "B" part of the adder circuit.

The Q register is capable of storing a five-digit number and is used principally for storing the first difference. There are three controls in the master control circuit which involve this register circuit. The first signal, DQ, causes the Q register to release the registered number and to accept the summation of the two numbers in the adder circuit at that time. The second signal, QA, causes the number in the Q register to be transferred to the "A" part of the adder circuit. The third signal, 1QB, causes the number in the Q register to be shifted one place to the left and placed in the "B" part of the adder circuit. In this case, the first of the five digits is discarded, and a zero is substituted for the fifth digit. For example, under this signal the number 65542, if stored in the Q register, would be transferred to the "B" part of the adder as 55420. The R register is capable of storing a five-digit number, the first of which also indicates the

sign of the registered number. It is used principally for storing the second difference. The binary part of the first digit indicates whether the number is stored in its complement form or not. For example, 94569 stored in the R register means that -5431 is the actual number, and 04569 means that the actual number is +4569. There are four controls in the master control circuit, which involve this register. The first signal, DR, causes the R register to release the registered number and to accept the summation of the two numbers in the adder circuit at that time. The second signal, RB, causes the number in the R register to be transferred to the "B" part of the adder circuit. The third signal, 1RB, causes the number in the R register to be shifted one place to the left and placed in the "B" part of the adder circuit. The first digit of the number is discarded, and a zero is added for the fifth digit. For example, 00876 in the R register would appear as 08760 in the "B" part of the adder. The fourth signal, R1B, causes the number in the R register to be shifted one place to the right and placed in the "B" part of the adder. In this case, the fifth digit is discarded, and either a zero or nine is substituted as the new first digit, depending upon whether the original first digit was zero or nine respectively. For example, 08765 in the R register appears as 00876 in the "B" part of the adder circuit, and 98765 in the R register appears as 99876 in the "B" part of the adder.

The S register is capable of storing a five-digit number, the first digit of which also indicates the sign of the registered number. It is used principally for storing the third difference. This register is very similar to the R register, since it has the same storing capacity and the same operational features. There are four controls in the master control circuit, which involve this register. The first signal, DS, causes the S register to release the registered number and to accept the summation of the two numbers in the adder circuit at the time. The second signal, SB, causes the number in the S register to be transferred to the "B" part of the adder circuit. The third signal, 1SB, causes the number in the S register to be shifted one place to the left and placed in the "B" part of the adder. The discarded and the new digits are obtained in the same manner as described for the R register. The fourth signal, 2SB, causes the number in the S register to be shifted two places to the left and placed in the "B" part of the adder circuit. In this case the first and second digits are discarded, and new fourth and fifth digits (both zero) are substituted. For example, 08765 in the S register appears as 76500 in the "B" part of the adder circuit.

The E register is capable of storing a two-digit number with the added provision that the first digit also designates the sign of the number stored. It is used principally for storing the "error" obtained by comparing an extrapolated value with the value taken from the input tape. For example, 45 indicates an error of +45, while 95 indicates an error of -05, and so on. The register can indicate a discrepancy or error between the values of ± 50. There are four controls in the master control circuit, which involve this register circuit. The first signal, DE, causes the E register to release the registered number and to accept the summation of the two numbers in the adder circuit at that particular time. The other three controls concern the transfer of the number to either the "A" or "B" part of the adder, and in each case the complement from 99 of the number in the E register will be transferred. This is desirable because the interpolation formulas employed always require a reverse in the sign of the error. The second signal, E3B, causes the complement of the number in the E register to be shifted three places to the right and placed in the "B" part of the adder circuit. The missing places are filled in with either zero or nine depending upon the sign indicated by the first digit of the number in the E register. For example, 95 in the E register appears as 00004 in the "B" part of the adder circuit, and the number 45 in the E register appears as 99954 in the "B" part of the adder circuit. The second signal, E2A, causes the complement of the number in the E register to be shifted two places to the right and placed in the "A"

part of the adder circuit. The missing digits to the left are filled in with either zero or nine depending upon the sign indicated by the first digit of the number in the E register, and the digit missing on the right automatically becomes a nine. For example, 95 in the E register appears as 00049 in the "A" part of the adder circuit, and the number 45 in the E register appears as 99549 in the "A" part of the adder circuit. The fourth signal, E3A, is similar to the second signal except that the number is shifted to the "A" part of the adder instead of to the "B" part.

The C register is capable of storing a five-digit number and is the general purpose register of the Relay Interpolator. It finds important use when the adder circuit is being used in a multiplication of a variable quantity by a constant. There are three controls in the master control circuit, which involve this register circuit. The three signals are: DC, which releases the number in the C register and causes the control circuit to accept the summation of the two numbers in the adder circuit at that time; CA, which causes the number in the C register to be transferred to the "A" part of the adder circuit; and, CB, which causes the number in the C register to be transferred to the "B" part of the adder circuit.

Adder Circuit

The adder circuit consists of a suitable number of relays so connected and interconnected that the sum of two numbers received from the register circuits is made available for transfer to any of the register circuits of the Relay Interpolator. The adder consists of two five-digit memory registers interconnected in such a way that the sum of the numbers registered is always indicated by electric ground on the proper outgoing leads. The five digits of each of the register circuits are arbitrarily designated V, W, X, Y, and Z. An example of an addition problem for purposes of illustration is given below:

V	W	X	Y	Z	(Column position)
2	9	6	8	4	(First number)
3	7	4	9	3	(Second number)
1	1	1	0	0	(Carry digits)
6	7	1	7	7	(Sum)

The addition is performed by the adder circuit of the Relay Interpolator one digit at a time. The carry-in lead of zero to the Z-digit examines the numbers registered in the Z-digits of the "A" and "B" parts of the adder, causes the "7" relay (5 and 2 relays in the biquinary system) to operate, and signals a carry-zero condition to the Y-digit. Ground on the carry-in lead of zero examines the operated Y-digit relays, causes a "7" to be indicated in the answer, and signals that a carry-one condition exists to the X-digit. This procedure is continued until the entire sum has been indicated. From this brief explanation the basic requirements of an adder circuit may be determined as:

(a) Provision for registering two five-digit numbers; and -
(b) Interconnections between these two banks of relays by means of the carry leads so that the sum of the two registered numbers may be obtained.

Figure 9 is provided to illustrate the method of making relays perform the operation of addition. This plate shows the adder's two banks of relays for a single digit. Assume that the number "one" is registered in the "A" part of the adder and the number "two" in the "B" half. With these relays in an operated condition, the associated make contacts are closed, and the ground on the carry-in zero lead to the "two" relay of the "B" part

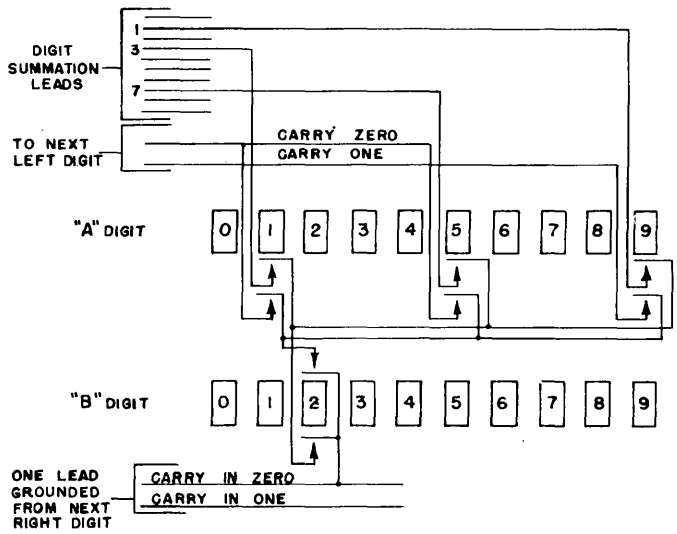

Figure 9 - Adding by Means of Relays

can be traced to the "three" outgoing summation lead and also to the carry-zero lead to next left digit. There is no answer register in the Relay Interpolator. The answer is represented by the grounding of certain of the out-going summation leads. Two other problems may be solved by the schematic drawing of Figure 9:

2 + 5 = 7 (with carry zero to next left digit grounded)
2 + 9 = 1 (with carry one to next left digit grounded)

These examples indicate the manner in which a complete relay addition table may be constructed.

The illustration just used is based upon the decimal notation, because there is a certain degree of schematic simplification possible in that notation. In the Relay Interpolator the numbers in the two register circuits of the adder are stored on the biquinary number system explained in a preceding paragraph. The adding is accomplished exactly as described above, except that two adding circuits must be provided, one for the quinary parts and one for the binary parts of each pair of digits. The two quinary parts use the carry-in condition from the next right digit and provide an answer of 0, 1, 2, 3, or 4 plus a carry-out 00 or 5 to the binary part of the adder. The binary part of the adder uses the carry from the quinary part and produces an answer of 00 or 5, plus a carry-out of zero or one to the quinary part of the next digit to the left. If the Y- and Z-digits of the example given above in decimal notation are used, the following relay conditions occur:

Y-digit: 5 and 3 relays operated (First number)
5 and 4 relays operated (Second number)

Z-digit: 00 and 4 relays operated (First number)
00 and 3 relays operated (Second number)

The sequence of operations within the adder circuit is as follows:

(a) Ground on the carry-in lead of zero to the Z-digit examines the operated "3" and "4" quinary relays, grounds the "2" quinary summation lead of the Z-digit, and signals the binary adder that a carry-five condition exists.

(b) Ground on carry-in lead of five examines the operated 00 and 00 binary relays, grounds the "5" binary summation lead of the Z-digit and signals the quinary part of the Y-digit that a carry-zero condition exists.

(c) Ground on the carry-in zero lead to the quinary part of the Y-digit examines the operated 4 and 3 relays, grounds the "2" quinary summation lead of the Y-digit, and signals the binary part of that digit that a carry-five condition exists.

(d) Ground on the carry-in five lead to the binary part of the Y-digit examines the operated 5 and 5 relays, grounds the "5" binary summation lead of the Y-digit, and signals the quinary part of the next left digit that a carry-one condition exists.

It is obvious that the above operations may be continued for as many digits as may be required. The problems for which the Relay Interpolator was designed require a five-digit adder circuit.

The carry signal from the binary part of the first, the extreme left, digit is not used in addition problems. The person designing the operational tape must continually be aware of this fact. This lead is, however, used in the preparation of one of the tapes for the Dynamic Tape Tester Model II, and its particular use will be described in a later paragraph of this report. The carry-in signal to the last digit, the extreme right position, has in the given illustrations always been assumed to be zero, since this is the normal case. In the description of the E register circuit it was stated that the complement of the number stored in that register is always transferred. This complement is taken from 99, so that the true complement is not transferred to the adding circuit. Whenever a number in either half of the adder circuit has been taken from the E register circuit, the carry-in one lead to the quinary part of the last digit is grounded. This restores the transferred number to the true complement which is necessary for absolute accuracy. The numbers when transferred to the adder circuit from any other storing register are transferred exactly as registered; hence, the carry-in one lead to the extreme right digit is then not used. The carry-in one lead is also grounded whenever a number is placed in the adder from the input-data circuit, since in this case the complement from 9's of the true number has been transferred. The one is added to restore the transferred number to the true 10's complement.

There is no signal from the master control circuit for adding, since the circuit is designed to indicate always the sum of the two numbers registered in its memory circuits. This sum may be transferred to one of the other registers on the reception of the DP, DQ, DR, DS, DE, or DC master control signals. For example, on the reception of the DP signal from the master control circuit, the summation of the two numbers stored in the registers of the adding circuit at that time is transferred to the P register, the number previously stored in that register having first been erased. The other signals cause similar operations with respect to the other registers. The numbers placed in the "A" part of the adder are controlled by the PA, QA, E2A, E3A, and CA master control signals, which have been described previously. When one of these signals is received from the master control circuit, the "A" part of the adder is prepared for the reception of a number by the erasure of the number stored there. The number from the P, Q, E, or C register is then registered. The numbers placed in the "B" part of the adder are

controlled by the signals PB, 1QB, 1RB, RB, R1B, SB, 1SB, 2SB, E3B, and CB, which have been described above. The "B" part of the adder may also register the number from the incoming data circuit. That circuit receives its numbers from the perforated input tape. A new number is accepted from this tape by the incoming data circuit, whenever the ITB master control signal is received. As has been mentioned, this number is transferred from that circuit to the "B" part of the adder as a 9's complement, and the carry-in one lead is grounded in the adder circuit to correct for this inaccuracy.

The algebraic process of subtraction may be handled with this same adder circuit, since in the equations handled by the Relay Interpolator negative numbers will be represented by their true complements. For example, in ordinary arithmetic problems such as

$$\begin{array}{r} 94578 \\ \underline{-47034} \\ 47544 \end{array}$$

the mathematical process is well known. To perform such an operation on the Relay Interpolator, it is necessary to place the first number 94578 in one part of the adder circuit and the true complement of the second number, that is, 52966, in the other part of the adder. The adder circuit grounds the carry-in zero lead to the extreme right digit, performing the addition as follows:

$$\begin{array}{rl} 94578 & \text{(First number)} \\ \underline{52966} & \text{(Complement of second number)} \\ 47544 & \text{(Answer)} \end{array}$$

The carry-one to the next left digit is disregarded in this case. This is the method used by the Relay Interpolator in the subtraction operation. It must be realized by the person designing the operational tape that the adder circuit, which was designed principally for addition, can be used in this manner. Since the Relay Interpolator was not designed for the general problem of subtraction, there is often a great deal of ingenuity required to perform this mathematical operation. It should be noted that only the E register and the incoming data register readily supply the complement of the number stored in their circuits.

The Relay Interpolator performs the process of multiplication of variables by constants by the method of successive additions. Consider the case of 469 x 43. The operational tape could contain suitable instructions to provide for the addition of the number 469, 43 times; thus, obtaining the correct product. The computation is simplified by considering the problem as 469 x (40 + 3). In this case the interpolator would perform the multiplication operation as the following sum:

$$\begin{array}{r} 469 \\ 469 \\ 469 \\ 4690 \\ 4690 \\ 4690 \\ \underline{4690} \\ 20167 \end{array}$$

In this example the product consists of the sum of seven terms. An alternate method of writing the same problem is 469 x (11 + 11 + 11 + 10). In this case the product is obtained by the addition of 5 terms, since there is one addition necessary to obtain the

value of 469 x 11. The manner in which any particular multiplication of this type is written depends upon the ingenuity of the person preparing the operational tape.

The decimal point is not considered by the Relay Interpolator, as it performs the operations demanded of it by the operational tape instructions. As far as the Relay Interpolator is concerned, the problem of 469 x .043 would be handled in the same manner as the problem 469 x 43. The position of the decimal point is of interest to the person preparing the operational tape, since it is his duty to determine the sequence of the control operations necessary to produce a solution of the given equation in which the position of the decimal point has been specified.

In the process of multiplication as performed by the Relay Interpolator, the multiplicand (the number to be multiplied) is transferred to the adder either from a register or from the input-data tape. In the Relay Interpolator only constant multipliers may be used; hence, the operational control tape sequence is arranged so that the multiplicand (which is a variable) will be always, assuming the above example, added three times, shifted one place to the left, and added four more times. The Relay Interpolator cannot multiply two variables.

The Relay Interpolator can be made to handle the division of a variable by a constant by rewriting the division problem as a multiplication of the variable by the reciprocal of the given constant. The master control operations are then given in the sequence necessary to solve the rewritten problem. The division of one variable by a second variable is not possible.

Master Control Circuit

As indicated in the schematic diagram of Figure 2, the master control circuit controls the operation of all other circuits of the Relay Interpolator. It has been pointed out that each circuit has an individual control circuit, but that the master control circuit gives the signal for the operation of these subordinate circuits. The master control circuit, through the sequence of instructions contained on the operational tape, controls the nature of the computations performed by the Relay Interpolator. The master control operational tape is prepared, so that the sequence of its signals corresponds to the sequence of mathematical operations which must be performed to obtain the solution of the given problem. There are thirty-two possible master control codes, which may be obtained from the various combinations of the five possible perforations. These master control codes and their corresponding instructions to the Relay Interpolator may be summarized as follows:

Group	Numerical Code	Tape Perforations	Meaning
I.	0	a b c e	DQ, transfer sum to Q register.
	1	a b e	DP, transfer sum to P register.
	3	b d	DE, transfer sum to E register.
	12	a d	DS, transfer sum to S register.
	24	b c d e	DC, transfer sum to C register.
	26	c d	DR, transfer sum to R register.
II.	4	e	PA, transfer P to A.
	6	a b c	E2A, transfer E to A, shift 2R.
	7	b c	E3A, transfer E to A, shift 3R.
	8	d e	CA, transfer C to A.
	15	c e	QA, transfer Q to A.

Group	Numerical Code	Tape Perforations	Meaning
III.	5	a c e	1QB, transfer Q to B, shift 1L.
	13	a c d	RB, transfer R to B.
	14	b d e	ITB, transfer input data to B.
	16	a b d	E3B, transfer E to B, shift 3R.
	17	a b c d	SB, transfer S to B.
	19	d	2SB, transfer S to B, shift 2L.
	21	a e	PB, transfer P to B.
	22	a c d e	R1B, transfer R to B, shift 1R.
	23	b c d	1SB, transfer S to B, shift 1L.
	25	a d e	CB, transfer C to B
	27	c d e	1RB, transfer R to B, shift 1L.
IV.	20	a b d e	NC, signal for beginning of new cycle
	--	a b c d e	LETTERS, separation between cycles, erasure.
V.	10	a b	DOD-PCR, binary translation code, print carriage return.
	11	a c	DOD-1, binary translation code.
	29	c	DOD-2, binary translation code.
VI.	9	b c e	PRT, print number stored in P register.
	18	b e	POT, perforate thirty-segment translation code.
	28	b	DID, perforate eight-segment translation code.
VII.	2	a	(A+B), indicate summation on lamp panel.

The numerical code indicates the particular key of the perforator which must be depressed in order to obtain the corresponding tape perforations. The codes fall naturally into seven distinct groups. The first group contains those codes used to transfer summations to the various storing registers. A summation is indicated by the letter "D"; hence, the symbol DQ means "Transfer D (summation of the two numbers in the adder) to the Q register." The second group of codes end in the letter "A", which signifies the transfer of a number to the "A" part of the adder circuit. The place from which the number is taken is indicated by the letter preceding the A. For example, PA is the symbol indicating the transfer of the number from the P register to the "A" part of the adder circuit. Where a number appears to the right of the originating register, it indicates the number of column places which the number is to be shifted to the right. For example, E3A means that the number in the E register is to be shifted three column-places to the right, and the result placed in the "A" part of the adder circuit. The third group of codes end in the letter "B", indicating that the number is to be transferred to the "B" part of the adder circuit. The register from which that number is to be taken is indicated by the letter preceding the letter B. The symbol RB indicates the transfer of a number from the R register to the "B" part of the adder circuit. Numbers appearing between the two register designations, as E3B, have already been defined. Numbers appearing before the originating register designation, as 1QB, indicate that the number is to be shifted the given number of column-places to the left. In this case, the number in the Q register is shifted one column-place to the left and then transferred to the "B" part of the adder.

The fourth group of codings is used at the beginning of a master control tape. The Letters code, all five perforations, is used to identify more easily the start of the cycle of a master control tape. In order for the Relay Interpolator to function properly the master control tape must always be positioned at the beginning of a cycle when starting the Relay Interpolator. The placing of several such symbols at the beginning of the cycle simply makes the starting point more easily identified. This code performs no actual mathematical operation. On the master control tape this symbol is followed by the NC symbol. The NC signal indicates the beginning of the actual problem and serves to transfer control of the Relay Interpolator to the incoming data circuit should that circuit desire to print identification information. This process is explained in the description of the incoming data circuit, which follows this description of the master control circuit. The first symbols appearing on the master control tape then will be one or more "Letters" followed by one NC symbol.

The fifth group of codes is used to obtain a binary translation of a number expressed in the decimal system. The three codes in this group guide the Relay Interpolator in computing, storing, and recording a binary number in perforated form. These circuits are used in preparing the gun order "answer" tape for the Tape Dynamic Tester Model II. The precise meaning of these codes is explained in a later section of this report.

The sixth group of codes is used to extract information from the Relay Interpolator. The PRT code causes the first four digits of the P register to be recorded on the teletype printer. At the present time plans are being made to increase the printing capacity of this code to all five digits of the P register. The POT code causes the number in the P register to be referred to the thirty-segment translation circuit with the coding of that circuit being recorded in a perforated form on five-hole tape by the reperforator. The DID code causes the number in the P register to be referred to the eight-segment translation circuit, and the coding established by that circuit is punched out on six-hole teletype tape by the reperforator. The last group of codes contains the code (A + B) which, when the (A + B) key of the main control panel is operated, will stop the Relay Interpolator's operation so that the condition of specific circuits may be examined by observing relays or the lamps provided for that purpose on the main control panel.

As a specific example, concerning the design of an operational tape, suppose that the following formula is to be solved by the Relay Interpolator:

$$\text{Error} = P_0 + 20\,Q_0 + 420\,R_0 + 1650\,S - P_{40}\,.$$

This expression represents the error incurred in comparing the actual value of the function with an extrapolated value of that function based on present first, second, and third differences for a time interval of one-twentieth of a second. P_0 is known, as well as the current first, second, and third differences, which are Q_0, R_0, and S, respectively. The coefficients of Q_0, R_0, and S are such that they will yield an extrapolated value of P_{40}. The actual value of P_{40} is then inserted into the Relay Interpolator from the incoming data tape and compared with the extrapolated value. The resultant quantity is the error. So that this problem can be made as realistic as possible, assume that the following values are in the machine, and E is to be determined from the above equation:

P_0 = 82.477, which is the interpolated value of the function just computed for the time of 24 seconds.

Q_0 = 02.204, which is the first difference used in obtaining P_0.

R_0 = 0.1324, which is the second difference value used in obtaining Q_0.

$S = 9.9892$, which is the true complement of the third difference used to obtain R_0. This number being in the complement form indicates that S is negative.

$P_{40} = 13$, which is the value of the function for time of 26 seconds, and appears on the input tape. The real value for P_{40} is 213, but the recorded tape value is given only as the last two digits. There is no error possible in having the Relay Interpolator recognize this value as other than 213, because of the magnitudes of the first, second, and third differences. If P_{40} had been actually 313, the value of the first difference would have been larger. If 113 had been meant, the first difference would have been smaller. Of course, there is a limit to the capability of the Relay Interpolator in handling the unrecorded digits properly, and this capability is a function of the storing capacities of the difference registers.

The various Relay Interpolator operations and an explanation of each step follow:

Master Control Signal	Explanation
LETTERS	Permits easy visual determination of the beginning of the cycle.
NC	Master control circuit signals the incoming data circuit to check for the presence of any identification data that is to be printed. In this case there is none; so the master control tape is advanced to the next code upon receiving the "No data" signal from the incoming data circuit.
PA	Transfer P_0, 82.477, to the A part of the adder circuit. If there is a number in the B part of the adder a sum is available in the summation leads from the adder, but in this case the sum is not used.
1QB	Transfer 10 Q_0, 22.040, to the B part of the adder circuit.
DC	Transfer the sum, $P_0 + 10\ Q_0$, 04. 517, to the C register for temporary storage. It should be noted that while the actual sum is 104.517 only the last five digits are contained in this transfer. As will become evident, there is no need of recording the one.
CA	Transfer the number, 04.517, which is in the C register, to the A part of the adder circuit.

Master Control Signal	Explanation
DC	Transfer the sum of $(P_0 + 10\ Q_0) + 10\ Q_0$ or $P_0 + 20\ Q_0$, 26.557, to the C register for temporary storage. Note that $10\ Q_0$ will continue to be stored in the B part of the adder circuit until another number replaces it.
CA	Transfer $P_0 + 20\ Q_0$, 26.557, to the A part of the adder.
DC	Transfer the sum, $P_0 + 30\ Q_0$, 48.597, to the C register.
CA	Transfer $P_0 + 30\ Q_0$ to the A part of the adder.
DC	Transfer the sum, $P_0 + 40\ Q_0$, 70.637, to the C register.
CA	Transfer $P_0 + 40\ Q_0$ to the A part of the adder.
RB	Transfer $10\ R_0$ to the B part of the adder. Note that the number in the R register has the decimal point between the first and second digits; consequently, this number when added to $P_0 + 40\ Q_0$, which has the decimal point between the second and third digits, represents $10\ R_0$. The number in the B part of the adder is 01.324.
DC	Transfer $P_0 + 40\ Q_0 + 10\ R_0$, 71.961, to the C register.
CA	Transfer $P_0 + 40\ Q_0 + 10\ R_0$ to the A part of the adder.
DC	Transfer $P_0 + 40\ Q_0 + 20\ R_0$, 73.285, to the C register.
CA	Transfer the number in C to the A part of the adder.
1RB	Transfer $100\ R_0$, 13.240, to the B part of the adder.
DC	Transfer $P_0 + 40\ Q_0 + 120\ R_0$, 86.525, to the C register.
CA	Transfer the number in C to the A part of the adder.
DC	Transfer $P_0 + 40\ Q_0 + 220\ R_0$, 99.765, to the C register.
CA	Transfer the number in C to the A part of the adder.
DC	Transfer $P_0 + 40\ Q_0 + 320\ R_0$, 13.005, to the C register, noting that again the 1 is dropped from the calculation.

Master Control Signal	Explanation
CA	Transfer the number in C to the A part of the adder.
DC	Transfer $P_0 + 40\ Q_0 + 420\ R_0$, 26.245, to the C register.
CA	Transfer the number in C to the A part of the adder.
SB	Transfer 10 S, 99.892, to the B part of the adder. Note that due to the position of the decimal point in the stored number a zero shift gives 10 S.
DC	Transfer $P_0 + 40\ Q_0 + 420\ R_0 + 10$ S, 26.137, to the C register. Note that in this case adding the complement of a number gives the same result as subtracting the true number.
CA	Transfer the number in C to the A part of the adder.
DC	Transfer $P_0 + 40\ Q_0 + 420\ R_0 + 20$ S, 26.029, to the C register.
CA	Transfer the number in C to the A part of the adder.
DC	Transfer $P_0 + 40\ Q_0 + 420\ R_0 + 30$ S, 25.921, to the C register.
CA	Transfer the number in C to the A part of the adder.
DC	Transfer $P_0 + 40\ Q_0 + 420\ R_0 + 40$ S, 25.813, to the C register.
CA	Transfer the number in C to the A part of the adder.
DC	Transfer $P_0 + 40\ Q_0 + 420\ R_0 + 50$ S, 25.705, to the C register.
CA	Transfer the number in C to the A part of the adder.
1SB	Transfer 100 S, 98.920, to the B part of the adder.
DC	Transfer $P_0 + 40\ Q_0 + 420\ R_0 + 150$ S, 24.625, to the C register.
CA	Transfer the number in C to the A part of the adder.
DC	Transfer $P_0 + 40\ Q_0 + 420\ R_0 + 250$ S, 23.545, to the C register.
CA	Transfer the number in C to the A part of the adder.
DC	Transfer $P_0 + 40\ Q_0 + 420\ R_0 + 350$ S, 22.465, to the C register.

Master Control Signal	Explanation
CA	Transfer the number in C to the A part of the adder.
DC	Transfer $P_0 + 40\ Q_0 + 420\ R_0 + 450$ S, 21.385, to the C register.
CA	Transfer the number in C to the A part of the adder.
DC	Transfer $P_0 + 40\ Q_0 + 420\ R_0 + 550$ S, 20.305, to the C register.
CA	Transfer the number in C to the A part of the adder.
DC	Transfer $P_0 + 40\ Q_0 + 420\ R_0 + 650$ S, 19.225, to the C register.
CA	Transfer the number in C to the A part of the adder.
2SB	Transfer 1000 S, 89.200, to the B part of the adder.
DC	Transfer $P_0 + 40\ Q_0 + 420\ R_0 + 1650$ S, 08.425, to the C register. This number is the extrapolated value of P_{40}. Two ones have been dropped from the calculations; hence, the value of P_{40} is actually 208.425.
CA	Transfer the number in C to the A part of the adder.
ITB	Transfer the complement from 9's of the point read from the incoming data tape. The point is 13, and the number transferred to the B part of the adder is 86.999. The carry-in one lead to the extreme right digit is grounded, and thus the actual summation is correct. The addition is then the sum of 08.425 + 86.999 + 00.001 and is equal to 95.425, which is the error.
DE	Transfer the error value to the E register. Only the 95 will be recorded in the E register. Due to the fact that the first digit is greater than five, the error will be treated as a negative quantity. 95 actually means -05. The meaning of this figure, as related to the actual data, is that the extrapolated value fell short of the actual value by five units; consequently, the first, second, and third differences will have to be corrected to reduce this discrepancy in the direction of zero.

The master control tape for the above case would contain in sequence the perforated codes corresponding to the above instructions. Each line of perforations on the tape represents one of thirty-two signals. Through a mechanical sensing mechanism and a translation circuit, the master control circuit is able to instruct the operation of the various subordinate control circuits. The translation is a simple selection problem

based upon the fact that, when a finger of the tape transmitter has passed through a perforation in the tape a set of relays can be made to operate. For each of the five mechanical fingers of the transmitter there is a set of relays, which will operate should the associated finger find a perforation in the portion of tape being examined at that time. These five sets of relays are indicated in Figure 10 as A, B, C, D, and E. In this diagram there is only one relay for each mechanical finger, but more contacts would have to be provided to care for the thirty-two different master control signals. Only eight of these signals are illustrated in the figure. The manner in which the rest of the conversion unit is wired is a simple extension of the wiring that appears in the diagram. For example, suppose the "Letters" symbol (five perforations) has been sensed by the tape transmitter. Then the five mechanical fingers attached to the tape transmitter have all passed through perforations in the tape and have caused all five relays of the diagram to operate. Ground may be traced from the make contact of the A relay through make contacts of the B, C, D, and E relays to the "Letters" lead. Similarly, under the effect of the PA, CA, DOD-2, QA, DS, CB, or DQ codes, ground may be traced from either the make or break contact of the A relay through the other four relays to the respective leads. These leads extend to initiating relays in the various subordinate circuits. The operation of an initiating relay causes the functioning of its circuit. The master control circuit must wait until a completion-of-operation signal has been received from the subordinate circuit signalled. Upon the receipt of this signal the master control circuit advances and senses the next code perforation on the master control tape. Each of these operations is completely checked by circuits within the computer to prevent premature operation of any of the elements. For example, on the signal DP the master control circuit cannot advance until a signal from the P register control circuit signifies that the summation from the adder has been received and registered properly in the P register.

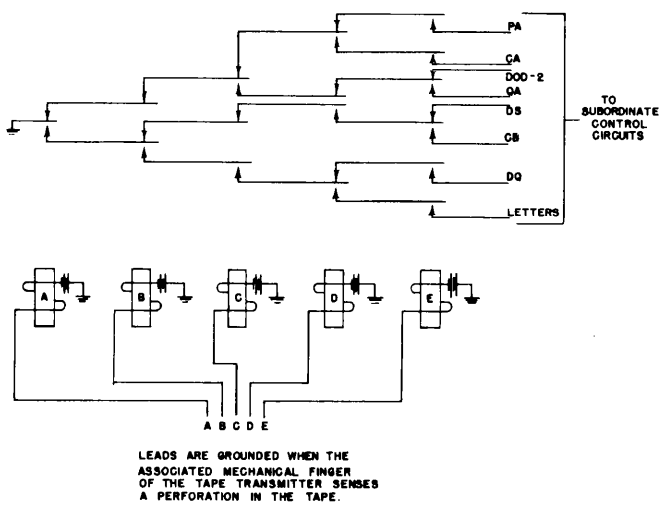

Figure 10 - Master Control Circuit

There are six keys on the main control panel which pertain primarily to the master control circuit. There are keys for starting and stopping the operation of the Relay Interpolator. The use of the (A + B) key has already been explained. The S x S (step by step) key, when operated, allows the master control tape to advance only upon the manual operation of the ADV (advance) key. This feature is useful in checking new master control tapes and in finding various types of circuit trouble. The MCL key, when operated, causes a group of lamps to light corresponding to the code perforations being read by the master control transmitter.

Input Data Control

The incoming data circuit of the Relay Interpolator is designed to perform two important functions: the identification of new courses; and, the reading of the input tape values. A course is a related series of problems, e.g., the interpolation of values to one-twentieth of a second for a set of one-second data points. The computations for this

set of points is called a course. A second course consists of another set of points, which have no relation to the points of the first set. In many cases one course is not long enough to require the Relay Interpolator to perform computations through the night; hence, it is possible to place two or three courses on the same input tape. It then becomes necessary to identify the start of each course and to inform the Relay Interpolator that it is about to begin on a new course. The latter operation is necessary, because the first, second, and third differences used for the first course will not apply to the second course. The operational tape of the master control circuit is cyclic; hence, it cannot serve to denote the beginning of a new course. The symbols identifying the new course must then be contained on the input tape being read by the incoming data circuit.

At the beginning of each cycle of the operational tape, the NC code causes the incoming data circuit to check the input tape for a "New Course" signal. If one is not found, the master control circuit simply advances its tape to the next code position. If such a signal is found, the identification information is taken from the incoming data tape and perforated directly on the output answer tape. The reception of a new course signal from the input tape also causes the P, Q, R, and S registers to be set to zero, i.e., the first, second, and third differences and the P value are erased and replaced with zeros. After reading the completion-of-printing signal from the input tape, the incoming data circuit causes the first two digits of the course data to be read from the input tape into the number register of the input data circuit. The number will remain in that register until the ITB signal from the master control circuit is received. At that time the complement of the number from 99 will be placed in the V and W digits of the "B" part of the adder circuit. The remaining three digits of that register will be set to 9. As soon as the adder has indicated that it has properly recorded this number, the input data circuit releases the number in its storing register and accepts the next two-digit number from the input data tape.

The input tape read by the transmitter of the input data circuit has been prepared by an operator using a 14A-Type Teletype Perforator. This machine is used by the operator to transcribe written numerical data to the form of perforated codes on teletype tape. The device has a key-board similar to the standard typewriter. The keys are designated zero to twenty-nine. The decimal numbers from zero to nine are represented by the keys designated zero to nine in the following manner:

Key Punch	Decimal Number	Perforation on Tape
9	0	b c e
0	1	a b c e
1	2	a b e
2	3	a
3	4	b d
4	5	e
5	6	a c e
6	7	a b c
7	8	b c
8	9	d e

The number indicated as the key punch is the number of the key of the perforator unit which must be depressed to obtain the corresponding tape perforations. Caps for the keys are available; hence, the numbers of the key punches will, when an input tape is being prepared, correspond to the correct decimal number. For example, the key punch designated "three" is covered by a cap upon which the number "four" is printed. The use of these caps eliminates the translation between the key designations and the

decimal numbers by the operator as he prepares the input tape.

Suppose that it is required to manufacture an input problem tape for the following numerical data:

1234.7
1236.5
1238.1
1239.8
1241.6
1243.5
1245.5, and so on.

Assume that the caps are on the top row of keys of the perforator unit, so that the nine key is designated zero, the zero key, one, etc. The identification data, which will identify this course, is the repetition of the perforations obtained by depressing the twenty-three key, because this is, say, the twenty-third of a series of courses being worked on. The input tape would then be made by the operator of the perforator as he successively depresses the following keys:

29-29-29-29-29-29-29-29-29-23-23-23-23-23-23-23-23-23-23-23-
5-4-7-29-6-5-29-8-1-29-9-8-29-1-6-29-3-5-29-5-5-29, and so on.

The 29's at the beginning of the tape represent the "New Course" signal. A "New Course" signal consists of more than one "29" code in sequence. The 23's are punched on the output tape as identification for the course which follows. The identification information may consist of any of the available codes from zero to twenty-nine which do not contain an e perforation. A code containing an e perforation serves as the end-of-perforating signal. The repetition of the No. 23 punch simplifies the visual identification of the beginning of the course for both the input and output tapes. The "5" code is used as a signal that all desired information for the course has been printed. This is followed by the numbers of keys corresponding to the last two digits of each of the given tabulated numbers. A mathematical examination of the problems for which the Relay Interpolator has been designed showed that only the last two digits of the given function are required. Each pair of digits is separated by a "29" perforation, which synchronizes the reading operation by indicating the end of one number and the start of the next. An Eraser symbol, the "Letters" coding, may be used to cancel any mistakes that may have been made during the perforation of the tape. The incoming data circuit has been designed to ignore all such codings appearing on the input tape. This coding may then be used to save an input tape where a mistake has been made in the typing, provided that the mistake is recognized as the key is being depressed. If mistakes are discovered after the input tape has been completely typed, it is necessary to perforate a correct copy by using the 16-Type Transmitter Distributor and Reperforator in the manner previously described.

The storing register of the incoming data circuit consists of two groups of five sets of relays. Each of the sets are electrically linked to one of the five mechanical fingers of the input tape transmitter. The first group of five sets is used to register the perforations read by the transmitter as the first digit from the tape. The second group receives the signals corresponding to the perforated coding of the second digit (the unit's part of the number). If the number 61 is recorded on the tape, the code perforation, a, c, e, when sensed by the mechanical fingers of the tape transmitter, will cause the A, C, and E sets of the ten's group of relays to operate. The second number, when its perforations are sensed by the fingers, will result in the A, B, C, and E sets of the unit's group of relays being operated. A switching relay operates to guide the first

digit read into the ten's group of relays and the second digit into the unit's group.

The translation of the operated relays in one of the groups to the complement of the number represented is illustrated by the circuit diagram of Figure 11. For example, if the number "six" is recorded on the relays by the operation of the A, C, and E sets of relays, ground may be traced from the operated A relay through a normally made contact of the B relay, a make contact of the operated C relay, a normally made contact of the D relay, and a make contact of the operated E relay. This output lead of the translator is the "three" lead, which may upon a signal from the master control circuit be connected to the V digit of the "B" part of the adder. The lead is connected to that circuit upon the reception of the ITB code from the master control tape. The numbers 2, 4, and 8 may be traced to the 7, 5, and 1 leads respectively on the diagram of Figure 11. In the input data circuit of the Relay Interpolator a second set (unit's digit) is connected to the W digit of the "B" part of the adder circuit. In the diagram only one relay is shown for each of the sets, but more relays would be required to extend the diagram to the nine possible cases. The actual translation performed by the Relay Interpolator results in the grounding of a set of biquinary leads rather than one of a set of decimal leads as shown in Figure 11.

Output Data Circuits

There are four distinct circuits provided in the Relay Interpolator for handling numerical values which are to be extracted from the computing circuits and recorded. The output data circuit used depends upon the instructions received and the signals sent by the master control circuit. The four output circuits function as follows: (1) On the signal PRT the printer circuit of the Relay Interpolator causes the first four digits of the P register to be printed by a standard teletype printer unit; (2) On the signal POT a translation circuit converts the numerical value in the P register to one of the points zero to twenty-nine according to a prearranged table of values, and the printer circuit causes the selected code to be punched on a standard five-hole tape by the reperforator unit; (3) On the signal DID a translation circuit converts the numerical value in the P register to one of the points zero to seven according to a prearranged table of values, and the printer circuit causes the selected code to be punched on standard six-hole teletype tape by the reperforator unit; and, (4) The signals DOD, DOD-1, and DOD-2 cause the Relay Interpolator to convert the numerical value in the P register from decimal notation to binary notation and to punch the computed binary notation on six-hole teletype tape.

The number stored in the P register (V, W, X, and Y digits) may be printed by the teletype printer unit at any time by inserting the code for the PRT signal in the master control tape. At the present time plans are being made to have the circuit also print the fifth digit of this register. The printer circuit is designed to provide automatically three blank spaces before the desired number

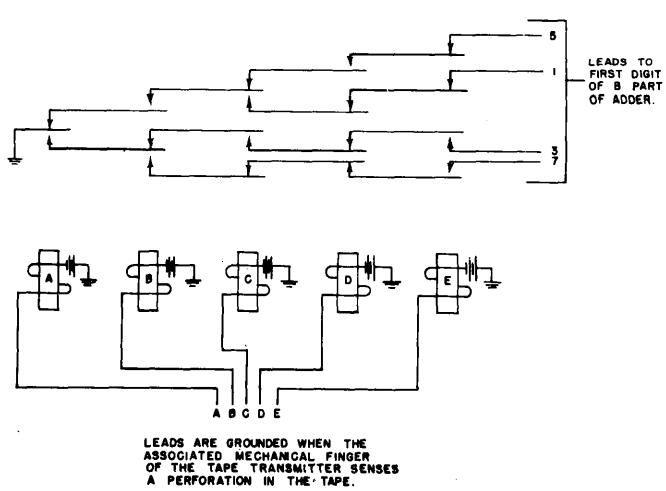

Figure 11 - Relay Circuit for Obtaining Complement of a Number

is sent. The PCR code causes the line feed and carriage return functions when it is desired to begin the printing on a new line. Approximately ten four-digit numbers may be printed per line. In manufacturing tapes for the dynamic testers, the printer output is used when the values of the derivatives of a particular course exceed the capacity of the Relay Interpolator. It is then necessary to reduce the increments of input data from one second to one-half second or less thereby insuring that the differences between input values will always lie within the capabilities of a five-digit machine. The results of this intermediate process are then used to obtain the required tapes. It was for this reason that the printer circuit was designed, since without the printer circuit the intermediate results were indicated visually by switchboard, and the values recorded manually. With the design of the printer circuit the speed of operation and the scope of the problems that could be undertaken by the Relay Interpolator were increased materially.

The first assignment of the Relay Interpolator was to interpolate data and to manufacture tapes for the Dynamic Tester Model I. This assignment required that six tapes be manufactured for each theoretical test course of a target aircraft in flight. Three of the tapes provided the three coordinates of the target's position (range, elevation, and bearing) at one-twentieth second increments of time. The other three tapes provided the correct gun orders to hit such a target at corresponding one-twentieth second increments of time. Each of the tapes had to be made separately with the result that the number of points to be computed for a run of one-hundred seconds was twelve thousand. The mathematical process of interpolation used by the Relay Interpolator is described in Appendix II. Following the interpolation of the numerical value for a one-twentieth of a second point, the numerical result is coded and perforated on standard five-hole teletype tape, thereby automatically preparing the required tape for the dynamic tester. This step requires that the changes in a coordinate be translated into "revolutions" of a shaft within the dynamic tester in accordance with the units of measure of one revolution of the corresponding handwheel of the gun director or computer being tested. Since the tester is a "dynamic" device it needs to know only the static or instantaneous positions of the handwheel at the one-twentieth second intervals. The number of complete revolutions of the dynamic tester or the tested device's shafts need not be known. The driver control-shafts in the dynamic tester are considered as having thirty twelve-degree position zones or segments. Suitable gearing is used to connect these shafts to the positioning handwheels of the computer or director under test.

The translation circuit of the Relay Interpolator which converts the numerical result to a tape code discards the whole or integral number of revolutions and converts the remaining fractional value into a single tape code corresponding to the equivalent twelve-degree segment. The segments have been arbitrarily called "points" and have been numbered from zero to twenty-nine. From a mathematical viewpoint, the value of the fractional part is converted from the decimal notation to a notation with the base thirty. In converting the interpolated values of the six tapes into the point coding, the thirty-segment translation circuit uses the number registered in the **W** and **X** digits of the **P** register and the binary setting of the **V** digit of that register. The numerical value is translated to the point code in accordance with the following table:

Numerical Value in P Register		Point
000 to 007, 250 to 257, 500 to 507, 750 to 757		0
008 to 015, 258 to 265, 508 to 515, 758 to 765		1
016 to 024, 266 to 274, 516 to 524, 766 to 774		2
025 to 032, 275 to 282, 525 to 532, 775 to 782		3
033 to 040, 283 to 290, 533 to 540, 783 to 790		4
041 to 049, 291 to 299, 541 to 549, 791 to 799		5
050 to 057, 300 to 307, 550 to 557, 800 to 807	etc.	6

The decimal point in the numerical value of the P register is determined by the particular instructions contained on the master control tape. As far as the translation circuit is concerned, 00.1,001.,.001, and 0.01 would all be coded as the point 0.

The second assignment given the Relay Interpolator was the interpolation and manufacture of the input tapes for the Dynamic Tester Model II. This assignment required that a minimum of three tapes be manufactured for each theoretical test course of a target aircraft in flight. The three tapes represent the three coordinates of the target's position (range,elevation, and bearing) at one-sixtieth of a second increments of time. Each of the three tapes must be made separately with the result that the number of points to be computed for the run of one-hundred seconds is eighteen thousand. The mathematical process of interpolation used by the Relay Interpolator is described in Appendix III of this report. Following the interpolation of the numerical value for a one-sixtieth of a second point, the numerical result is coded and perforated on standard six-hole teletype tape, thereby automatically preparing the required tape for the dynamic tester. The manner of coding the numerical results into points is similar to that performed by the thirty-segment translator circuit except that one revolution of the positioning synchro of the dynamic tester is divided into only eight segments. The desired degree of accuracy is maintained by the use of suitable gear arrangements within the Dynamic Tester.

The translation circuit of the Relay Interpolator converts the value of the fractional part of the revolutions from the decimal notation to a notation with the base eight. In this conversion the numerical results obtained from the interpolations are perforated on standard six-hole teletype tape as one of eight possible points. The eight-segment translator uses the numbers registered in the W and X digits of the P register and an odd-even indication from the V digit of that register. The numerical value (first three digits of the P register) is translated to the point code in accordance with the following table:

V Digit	W and X Digits	Point Code
Even	00-24	0
Even	25-49	1
Even	50-74	2
Even	75-99	3
Odd	00-24	4
Odd	25-49	5
Odd	50-74	6
Odd	75-99	7

The decimal point in the numerical result of the P register is determined by the instructions of the master control tape. The eight-segment translation circuit requires no reference to the position of the decimal point.

The design of the Dynamic Tester Model II is such that a check of each one of the three gun orders is made at three-tenths of a second intervals even though the input data is in increments of one-sixtieth of a second. With this reduced frequency of checking the data must be quite accurate. For this reason a special form of binary notation is used to denote the theoretically correct gun orders to be expected. It is necessary to represent gun orders at increments of 2^{-10} fractional revolutions of the fine synchro dial of the computer being tested. This means that ten binary digits are used to indicate fractional positions of the fine dial. The ten digits are arbitrarily designated A, B, C, D, E, A', B', C', D', and E'. The first five digits form one combination for perforating purposes, while the next five form a second combination. The entire coding of ten digits

occupies two one-tenth inch transverse sections of six-hole tape. The first of the six possible perforation positions in each section of the tape is not used.

The following table is used to obtain the equivalence between fractional rotations and the designation of the digit:

Fractional Part of Revolution	Decimal Equivalents	Digit
1/2	.50000	A
1/4	.25000	B
1/8	.12500	C
1/16	.06250	D
1/32	.03125	E
1/64	.01562	A'
1/128	.00781	B'
1/256	.00391	C'
1/512	.00195	D'
1/1024	.00098	E'

In using this number representation the accepted binary numbers of 0 and 1 are used. The number .50000 would be represented as 1000000000, i.e., the A digit is one, while all other digits are zero. Any decimal number with an accuracy of 2^{-10} or less may be represented in this system. For example, the number .9349, which for a 10° fine dial is equivalent to a gun order of 9.349°, is written 1110111101 in this modified binary notation. The binary number indicates the following summation:

.50000	(1/2)
.25000	(1/4)
.12500	(1/8)
.03125	(1/32)
.01562	(1/64)
.00781	(1/128)
.00391	(1/256)
.00098	(1/1024)
.93437	

This result is the equivalent number represented within the prescribed measure of accuracy. The portion of teletype tape punched to represent the above example would appear as follows:

11101
11101

where a 1 indicates a perforation in the tape, and a 0 indicates a blank.

The translation and the punching out of the binary coding is accomplished by the Relay Interpolator under the guidance of the DOD, DOD-1, and DOD-2 master control codes. The operations performed by the Relay Interpolator and the binary translation circuit are described below. Assume that the number .9349 must be translated to the special binary notation just described. The following "doubling" process is then employed:

.9349	(Given fractional value of a revolution)
+ .9349	
(1).8698	The (1) is the value of the A digit and is stored in the binary translation circuit until the values for the B to E digits have been obtained.

+ .8698	
(1).7396	The (1) is the value of the B digit and is stored in the binary translation circuit.
+ .7396	
(1).4792	The (1) is the value of the C digit.
+ .4792	
(0).9584	The (0) is the value of the D digit.
+ .9584	
(1).9168	The (1) is the value of the E digit. The first line of coding is now complete, and the binary translation circuit causes the coding to be punched on the six-hole teletype tape.
+ .9168	
(1).8336	The (1) is the value of the A' digit and is stored in the binary translation circuit until the values of B' to E' digits have been calculated.
+ .8336	
(1).6672	The (1) is the value of the B' digit.
+ .6672	
(1).3344	The (1) is the value of the C' digit.
+ .3344	
(0).6688	The (0) is the value of the D' digit.
+ .6688	
(1).3376	The (1) is the value of the E' digit. The second line of coding is now formed, and the binary translator circuit causes it to be punched on the six-hole teletype tape.

The two lines of binary punchings are followed by four lines of blanks (i.e., no perforations). This is for the purpose of synchronizing the various circuits of the Dynamic Tester Model II. The manner in which these blanks are obtained is contained in the sequence of master control operations for preparing a Channel No. 7 tape. This sequence is given in Appendix III of this report.

ACKNOWLEDGEMENTS

The final report ‡ issued by Bell Telephone Laboratories, Inc., on the Relay Interpolator indicated that several improvements in that device had been contemplated but had not been completed because of the termination of contracts shortly after the end of hostilities. One of these contemplated improvements was an instruction book which would be of aid in the operation of the interpolator. The present report was written to satisfy this need. The writer is indebted to Mr. E. G. Andrews and his group at Bell Telephone Laboratories for teaching him the fundamentals of relay-computer operation. In addition, the above-mentioned report by Mr. S. B. Williams was of great assistance. Appendix II of this report, in particular, follows very closely a section of Mr. Williams' report.

‡ Final Technical Report on the Relay Interpolator by S. B. Williams, NDRC, OSRD, Division 7 - Section 7.5, dated 31 October 1945.

This page intentionally left blank.

APPENDIX I - OPERATIONAL DESCRIPTION OF CIRCUITS

REGISTER CIRCUITS

Refer to BTL Drawing B-30936 (Issue 4, dated 14 December 1944)

Function

A register is capable of storing a number as long as desired, and proper provision is made for placing the number into the calculating portion of the Relay Interpolator upon a suitable signal from the master control circuit. All of the storing registers of the Relay Interpolator with the exception of the E register have a five-digit capacity. The E register is capable of storing a two-digit number. A number is "stored" by the continued operation of relays representing the desired digits. Seven relays per digit are necessary for this purpose when the biquinary number system is employed.

Circuit Explanation

Terminals 8 to 14 in drawing B-30936 are connected to the windings of the 4 to 00 relays respectively. Ground is always placed on one and only one of the leads in the binary and in the quinary groups. Operated relays will lock operated due to the ground on punching 15 through a make contact on the operated relays. Before a digit is introduced into this circuit, all relays are checked to an unoperated position. This is accomplished by passing ground from punching 46 through normally closed contacts of each of the relays to punching 7. After a digit is registered a check is made that at least one of the binary and one of the quinary relays are operated. This is accomplished by placing ground on punching 5, which is connected to make contacts of the digit relays in such a way that ground appears on the lead to punching 6 if the required conditions have been met. Ground on punching 16 will appear at punching 17 if more than one quinary relay, or both binary relays, are operated. This is the over-registration alarm lead.

When it is required to place the number stored in the calculating portion of the Relay Interpolator, ground is placed on one of the 38-41 leads (binary transfer leads) and the corresponding 1-4 leads (quinary transfer lead). The leads are energized upon the operation of certain relays shown on Drawing B-30938 (Register Control Circuit).

---

§ This and similar references are to Bell Telephone Laboratories drawings which were too bulky to be included in this report. A very limited supply of these drawings is available at the Naval Research Laboratory, for references purposes by authorized personnel.

The relation between leads and relays is as follows:

Quinary Lead	Binary Lead	Relay of Register Control Circuit
1	45	G 10 to G 13
2	44	G 9
3	43	G 8
4	42	G 7

The output ground appears on the corresponding terminal of the 45-42 group of leads if the binary output is 00, or on the corresponding terminal of the 37-34 group if the output is 5. The quinary output appears on the corresponding terminal of one of the following groups of quinary output leads:

Quinary Part of Number	Associated Output Leads
0	33-30
1	29-26
2	25-22
3	50-47
4	18-21

The wiring connections which refer to the V, W, and X digits of the P register are also contained on Drawing ES-826745.

REGISTER CONTROL CIRCUIT

Refer to BTL Drawing B-30938 (Issue 3, dated 2 December 1944)

Number Transfer From Register to Adder

In transferring a number from any register to either the A or B registers of the adder circuit, the signal from the master control circuit will operate one of the G-7, G-8, or G-9 relays associated with the register from which the number is to be taken. The operating paths of these relays may be traced to terminals 11 to 13 respectively with the ground originating in the master control circuit. Ground from a make contact of the operated G-7, G-8, or G-9 relay operates the G-5 relay in either the A or B adder register control circuit through a normally made contact of the G-6 relay in the same circuit. The operation of the G-5 relay opens the locking paths of all associated register relays (the locking ground is on terminals 5 and 6), releasing them. When all of the register relays have released, ground appears on the "Down" lead at terminal 1. The appearance of ground at that point indicates that the ground has successfully passed through normally closed contacts of all register relays; thereby insuring that they are in the unoperated position.

The ground on the "Down" lead operates the G-1 through G-4 relays of the register into which the number is to be placed. The operation of these relays cuts the desired number through to the A or B adder registers according to Option B or Option C of the register control circuit drawing. The ground on the G-6 lead passes through a make contact of the operated G-4 relay; and from terminal 2 passes to the register relays, checking that at least one of the binary and one of the quinary relays of each digit is operated. If this condition is met, the ground is returned to terminal 9, operating the G-6 relay. The operation of the G-6 relay releases the G-5 relay. Ground from a

normally made contact of the G-5 relay passes through a make contact of the operated G-6 relay and grounds the STEP lead (terminal 8) to the master control circuit, causing the master control transmitter to read the next tape code. The advance of the master control transmitter releases the operated G-7, G-8, or G-9 relay, which in turn releases the G-6 relay, returning the circuit to normal.

Number Transfer of Adder Sum to a Register

In transferring a summation of the adder to any register for temporary storage, the master control signal will operate the G-5 relay of the register which is to record the summation. The registration of the number is the same as that described in the above paragraph, except that the connections of the G-1 through G-4 relays are indicated in Option A.

Relays G-10 through G-13 control the prefacing of digits whenever a number is shifted to the right as it is being transferred to the adder. For example, under the master control signal, R1B, the number in the R register is shifted one place to the right and placed in the B part of the adder. The RV (G-11) relay has its contacts so wired that a "nine" is placed in the vacant V digit, if a complement (negative number) had been stored in the R register, or a "zero", if a positive number had been stored in that register. The G-10 through G-13 relays associated with the E register perform similar functions.

Carry-In Control to Adder

Wherever a number from the E register or the incoming data register is transferred to either of the adder registers, ground is placed on the corresponding lead to operate the AY or BY relay. When the AY and BY relays are both normal, the adder start lead of carry-in zero (terminal 15) is grounded. When either or both the AY and BY relays are operated, the adder start lead of carry-in one (terminal 14) is grounded. It should be noted that with both the AY and BY relays operated there is a loss of computing accuracy, because in this case a carry-in lead of one is grounded, when actually a carry-in lead of two should be grounded. Such a lead has not been provided in the Relay Interpolator. This condition may however, usually be avoided by proper design of the master control operational tape. The AY and BY relays, when once operated, will lock in that position until another number is registered in that part of the adder, at which time they will release.

ADDER CIRCUIT

Refer to BTL Drawing B-30937 (Issue 2, dated 14 September 1943)

Circuit Operation

The adder circuit consists of two five-digit registers, whose relays are interconnected to furnish the sum of the two numbers registered. The A and B registers of the adder are set from the storing registers according to the master control signals coming from the operational tape, and a summation is obtained by this circuit on each new setting of either one of the two registers. The registration of a number is accomplished by the same relay operations as were described for the register control circuit. The A register down-check is accomplished by introducing a ground on terminal 20 from the next right digit. The down-check for a particular digit is completed if the ground having passed through normally closed contacts of the seven biquinary relays,

exits to terminal 6, which is connected to terminal 20 of the next left digit. The B register down-check is accomplished in a similar manner using terminals 46 and 35. Ground from terminal 9 of the A register checks that at least one quinary and one binary relay are operated in that digit. If this condition is met, terminal 8 is grounded. The up-check for the B register digits is identical, except that terminals 37 and 38 are used. There is no need for an over-registration check in this circuit, since the operation of more than the required number of register relays would result in a multiple summation, and the error would be noticed by alarm circuits at the time the sum is transferred to one of the register circuits. The relay operation leads and terminal numbers are summarized as follows:

Relay	Terminal	Relay	Terminal
A00	3	B00	33
A5	7	B5	36
A0	14	B0	39
A1	16	B1	42
A2	17	B2	43
A3	18	B3	44
A4	19	B4	45

The relays of the registers when operated lock to the grounds on terminals 21 and 34 for the A and B registers respectively.

An addition begins with the grounding of either the carry-in zero or carry-in one lead (terminals 40 or 41 respectively) to the farthest right B register digit (this will always be the Z digit). The carry-in ground examines the operated binary and quinary relays of that digit in both the A and B registers and causes the sum to be recorded by the grounding of the proper D00 to D4 leads (terminals 1 or 2 for the binary part, and terminals 10, 11, 12, 13, or 15 for the quinary part) and the proper carry-out lead (terminals 4 or 5) to the next left digit. This adding process is carried out digit by digit until a complete summation has been made. It then requires a signal from the master control circuit to transfer the number on the D leads to one of the storing registers.

MASTER CONTROL CIRCUIT

Refer to BTL Drawing B-30939 (Issue 8, dated 2 December 1944)

General Operation

The operation of the RLS (release) key breaks the normally closed contact supplying the locking ground for the ST (start) relay. The release of the ST relay causes the release of the ST-1 relay, which had been operated from a ground on the normally closed contact of the ST key through a make contact of the operated ST relay. The release of the ST and the ST-1 relays opens the locking paths of all operational relays in the Relay Interpolator, causing all relays to release. The circuits of the Relay Interpolator are now normal. When it is desired to place the Relay Interpolator in operation again, the master control tape must be manually positioned on the "Letters" perforations.

With the master control tape so positioned, the master control circuit is placed in operation when the attendant operates the ST key. This key operated connects ground to the winding of the ST relay, causing it to operate. The GD relay then operates from ground on a make contact of the operated ST relay through normally closed contacts of the MC, MC-1, MC-2, MC-4, and MC-7 relays. The ST relay locks to ground on a

normally closed contact of the RLS key. Ground from a make contact of the operated ST relay operates the TT relay through normally closed contacts of the MC-4, MC-3, MC-7, MC-6, and MC-5 relays.

The release of the ST key causes the operation of the ST-1 relay from ground on a normally closed contact of the ST key through a make contact of the operated ST relay. Ground is supplied to the mark bar of the tape transmitter from a make contact of the operated ST-1 relay. The sequence of operation between the ST and ST-1 relays is to prevent the false operation of the AL and AL-1 relays through the TT relay. The operational tape is positioned on the "Letters" perforations; hence, the A, B, C, D, and E contacts of the tape transmitter pass the ground on the mark bar to the windings of the MC, MC-1, MC-2, MC-3, MC-4, MC-5, MC-6, and MC-7 relays which then operate. The GD relay releases at this time. Ground from a make contact of the operated ST-1 relay through normally closed contacts of the GD and M relays, through make contacts of the operated MC, MC-1, MC-2, MC-4, and MC-6 relays,through normally made contacts of the (S x S) key, AL-1, and AL relays, causes the M relay to operate. The M relay locks to a ground from a make contact of the operated ST-1 relay through a normally closed contact of the GD relay. Ground from a make contact of the operated ST relay through a make contact of the operated M relay causes the magnet of the master control transmitter to operate, advancing the tape to the next code. This process is repeated on each successive "Letters" code, until the "NC" code is read from the master control tape.

When the operational tape is positioned on the "NC" code perforations, the A, B, D, and E contacts of the tape transmitter pass the ground on the mark bar to the windings of the MC, MC-1, MC-3, MC-4, MC-5, MC-6, and MC-7 relays, which then operate. The GD relay releases at this time. Ground from a make contact of the operated ST-1 relay through normally closed contacts of the GD and M relays, make contacts of the operated MC and MC-1 relays, a normally closed contact of the MC-2 relay, and make contacts of the operated MC-4 and MC-7 relays,operates the NC-1 relay of the incoming data control circuit over the NC lead, provided the NC relay in that circuit is already operated. The operation of the NC-1 relay transfers the control of operations to the incoming data circuit. If the NC relay is not operated, the ground on the NC lead is passed through a make contact of the MC relay of the incoming data circuit to the STP lead. This ground operates the M relay through make contacts of the (S x S) key, and the AL-1 and AL relays. Ground from a make contact of the operated ST relay passes through a make contact of the operated M relay to operate the magnet of the master control tape transmitter which advances its tape to the next code.

When the incoming data circuit has completed its function, it returns the operational control of the Relay Interpolator to the master control circuit by switching the ground on the "NC" lead to the STP lead, which advances the master control tape transmitter to the next code, as just described. When this magnet is energized, the contacts of the transmitter through which the MC group of relays is operated are broken; thus, all relays of this group are released. The mechanical mechanism attached to the magnet causes the tape in the transmitter to be advanced to the next position whenever the magnet is operated. The M relay is made slow release so that the tape transmitter will have sufficient time to advance the tape to the next position. The release of the M relay by the removal of ground from the STP lead, releases the tape transmitter magnet, reclosing the ground from the mark bar to the MC group of relays. The relays, corresponding to the new set of perforations in the tape, then operate from the ground on the mark bar. The correspondence between the MC relays and the perforations in the tape is as follows:

Perforation in tape	Relays operate
a	MC-5, MC-6, MC-7
b	MC-3, MC-4
c	MC-2
d	MC-1
e	MC

The following sequence of relay operations is used for each reading of a code from the master control tape: The GD relay operates each time the MC relays are all released. As soon as any one of the MC relays operates, the slow-release GD relay begins to release. When the GD relay is finally released, ground from a make contact of the ST-1 relay through normal contacts of the GD and M relay is furnished to the operated MC relays to ground the proper control lead. When the desired operation has been completed, ground is applied to the STP lead; thereby advancing the master control tape one code position. An advance of the tape causes the ground to be removed from the STP lead.

Alarm Circuits

In the master control circuit which has just been described, it is necessary that the MC-3 and MC-4 relays both be operated or both be released. This is likewise true of the MC-5, MC-6, and MC-7 relays. If the MC-3 relay operates and the MC-4 relay fails to operate, or vice versa, the TT relay will release, closing the ground from a make contact of the operated ST-1 relay through a normally closed contact of the TT relay to the windings of the AL and AL-1 (alarm) relays. The AL and AL-1 relays lock to a ground on a make contact of the operated ST relay through a normally closed contact of the AL key. When the trouble condition has been cleared, the AL and AL-1 relays may be released by operating the AL key. Similarly, if any of the MC-5, MC-6, or MC-7 relays fail to operate, when any one of the three is operated, a visual alarm will be registered. The TT relay remains operated continuously, when the Relay Interpolator is in normal operation since it is a slow-release relay.

Step-by-Step Operation

When the (S x S) key is operated, the STP lead to the M relay is opened. It is then possible to hold the master control circuit in the STP position in order to check the condition of all associated circuits. When the check has been completed, the STP lead is connected to the M relay by operating the ADV key. The DL key may also be operated as an aid in the checking procedure. Ground on a make contact of this key operates the DL, DL-1, and DL-2 relays, which connect the leads representing the sum in the adder circuit to the D-lamps of the control panel. The operation of the MCL key connects ground to one side of make contacts on the MC, MC-1, MC-2, MC-3, and MC-6 relays. The other side of each of these make contacts is connected to a lamp on the control panel. The operation of any of the MC relays will then be indicated by the lighting of corresponding lamps on the control panel.

(A + B) Operation

When the (A + B) key is operated, ground from a make contact of the ST-1 relay through normally closed contacts of the GD, M, MC, MC-1, MC-2, MC-3, and make contacts of the operated MC-5 relay and the operated (A + B) key operates the DL, DL-1, and DL-2 relays. The operation of the DL group of relays connects the "D" leads from the adder circuit to the indication lamps on the control panel. Grounds on the "D" leads

indicate the sum of the numbers in the adder and light lamps, indicating this sum on the control panel. With the (A + B) key operated, ground from the ST-1 relay through a normally closed contact of the GD relay, a make contact of the operated (A + B) key, a normally closed contact of the DL key, a make contact of the operated DL-2 relay is passed to one side of a make contact of the ADV key. The other side of this make contact is connected to the STP lead of the master control circuit. The operation of the ADV key or the release of the (A + B) key will allow the master control circuit to advance to the next code. If the (A + B) key is not operated and the master control code (A + B), operating only the MC-5 relay, is received, the ground from the ST-1 relay through the MC relays and through normally closed contacts of the (A + B) and the (S x S) keys, is closed to the winding of the M relay thus advancing the master control circuit.

INPUT DATA CONTROL CIRCUIT

Refer to BTL Drawing B-30940 (Issue 6, dated 11 March 1944)

Start Operation

Before the ST (start) key of the master control circuit is operated, the problem data tape must be placed in the "NC" position. The code for this position is a perforation in the c position only, and is made by depressing the "SPACE" bar (key No. 29) of the perforator unit. When the problem data tape is in this position, the operation of the ST key will cause the operation of the ST relay of the master control circuit. The operation of the ST relay supplies ground over the DTG lead to the space bar of the problem data transmitter, causing the T-3 and T-3' relays to operate through the closed transmitter contact and a normal contact of the TCO relay. At this time the master control circuit also supplies ground over the TCG lead to the T-5 relay, causing the operation of the NC relay through a make contact of the operated T-3 relay, and normally closed contacts of the T-5, T-4, T-2 and T-1 relays. With relay NC operated, the "NC" lead from the master control circuit is connected to the winding of the NC-1 relay, which will operate as soon as ground is placed on the "NC" lead by the master control circuit, that is, upon the sensing of the "NC" perforations by the master control tape transmitter.

The release of the ST key causes ground to be placed on the WRG lead, closing the operating circuit of the DP-O relay except for the operated NC-1 relay. Ground from the MC relay normal through the DP-O relay normal and make contacts of the operated NC and NC-1 relays energizes the data tape transmitter magnet, causing it to open the mechanical reading contacts of the transmitter, thereby releasing the operated T-3 and T-3' relays. The operation of the transmitter magnet causes the input tape to be advanced to the next position. The release of the T-3 relay causes the release of the NC relay, which in turn releases the NC-1 relay. The release of the NC relay also opens the data tape transmitter magnet circuit, allowing it to release. The release of this magnet allows the T relays to operate in accordance with the perforations sensed by the mechanical reading fingers.

Setting Zeros in P, Q, R, and S Registers

The release of the NC-1 relay closes the ground on the WRG lead through normally closed contacts of the MC, TIC, DS-O, DR-O, and DQ-O relays to the winding of the DP-O relay, causing it to operate. The operation of the DP-O relay passes the WRG ground through normally closed contacts of the DQ-O, DR-O, DS-O, and TIC relays to the winding of the OZR relay, causing it to operate. Relay OZR operated closes ground to the D-O and D-OO leads (all digits) and grounds the DP lead to the P register through

a make contact of the operated DP-O relay. The P register control circuit checks all register relays normal and, then, operates the cut-in relays to close the D-O and D-OO leads to the proper register relays, causing them to operate. When the O and OO relays of each digit of the P register are operated, a circuit is closed to operate a relay in that register, which connects ground to the STP lead. Ground on the STP lead passes through normally closed contacts of the DT and TFS relays to operate the STP relay of the incoming data circuit. The operating ground of the DP-O relay passes through a make contact of the operated STP relay and a make contact of the operated DP-O relay to the winding of the DQ-O relay causing it to operate. The operation of the DQ-O relay causes the release of the OZR relay, which in turn opens the ground to the DP lead; thus, releasing the cut-in relays of the P register control circuit. The release of these control relays allows the STP relay to release, which in turn releases the DP-O relay.

The release of the DP-O relay completes the path to reoperate the OZR relay, which, when operated, grounds the D-O and D-OO leads; and, the DQ lead through a normally closed contact of the DP-O relay and a make contact of the operated DQ-O relay. Ground on the DQ lead causes the Q register control circuit to check that the register relays are normal and then to operate its cut-in relays, causing the O and OO relays of each digit to operate from the grounds on the D-O and D-OO leads. The operation of these relays causes the grounding of the STP lead. The ground on the STP lead through the DT and TFS relays normal causes the operation of the STP relay, which passes the ground, operating the DQ-O relay, to the winding of the DR-O relay, causing it to operate. The operation of the DR-O relay releases the OZR relay, which opens the DQ lead, releasing the Q register control relays. This in turn opens the STP lead, releasing the STP relay. The release of the STP relay causes the release of the DQ-O relay, which recloses the path to operate the OZR relay. The R register control relays functions as just explained to register the zeros and to ground the STP lead, which causes the operation of the STP relay.

The subsequent operation of the DS-O relay causes the release of the OZR relay and the opening of the DR lead, releasing the R register control circuit relays. This releases the STP relay, and, in turn, the DR-O relay, which allows the OZR relay to reoperate, setting zeros in the S register as described above. When the required relays in the S register have been set up, ground is passed to the STP lead, operating the STP relay, which operates relay TIC to release the OZR relay. The release of the OZR relay opens the DS lead to release the cut-in relays in the S register control circuit, which in turn opens the STP lead and causes the STP relay to release. The release of the STP relay causes the release of the DS-O relay. There is no reoperate circuit for the OZR relay.

The Transfer Identification Code

Relay TIC operated supplies ground to operate the SRT relay to insure that it is operated when the master control circuit regains control of the Relay Interpolator. Relay TIC operated also supplies ground to one side of make contacts of each of the T-1', T-2', T-3', T-4, and T-5 relays. The operation of any of the first four of these relays will result in the grounding of the A, B, C, or D leads respectively to the outgoing data circuit. The operation of the TIC relay closes ground from the WRG lead through normally closed contacts of the NC-1, DP-O, DQ-O, DR-O, and DS-O relays; a make contact of the operated TIC relay; and, the operated combination of T-4, T-3', T-2', and T-1' relays to the ODS lead. The TIC relay is the start and stop control of the outgoing data circuit for this particular function.

The grounds on the A, B, C, or D leads will register the combination of perforations to be recorded as the first identification symbol. After the transmitter distributor in the outgoing data circuit has completed the sending process, a slow-release relay releases, placing ground on the STP-1 lead, which passes through a make contact of the operated TIC relay to the winding of the input tape data transmitter magnet, causing it to operate. The operation of this magnet moves the tape to the next position and releases any operated T relays. The release of the T relays opens the ODS lead, releasing the cut-in relays of the outgoing data circuit, which opens the STP-1 lead, allowing the tape transmitter magnet to release. The release of the tape magnet closes the tape contacts to operate the T relays corresponding to the perforations contained on the input data tape. Under this condition the ODS lead is again grounded to cause the outgoing data circuit to function for printing the next identification signal. This operation is repeated for each succeeding code perforation until the tape reaches the point where the coding is such that the T-5 relay is operated, i.e., an e perforation appears on the input tape.

The operation of the T-5 relay will pass the ground from the operated TIC relay to the winding of the STP relay, operating it. The operation of the STP relay passes the ground, operating the TIC relay, to the winding of the MC relay, causing it to operate. Relay MC operated closes ground through relay TIC operated to the incoming data tape transmitter magnet, causing it to operate. The operation of this magnet moves the tape to the next position, thereby releasing the operated T-5 relay. The release of the T-5 relay releases the STP relay, which releases the TIC relay. The release of the TIC relay causes the release of the transmitter magnet, which closes the tape contacts to operate the T relays corresponding to the perforations contained on the input data tape.

Transfer Control to Master Control Circuit

The release of the TIC relay following the operation of the MC relay closes ground through a make contact of the operated MC relay to the winding of the TFS relay, causing it to operate. A locking circuit for all T relays is supplied from ground on a normally closed contact of the TIC relay through the operated MC relay and normally closed contacts of the SPA and LET relays. Relay TFS operated transfers the STP lead from the winding of the STP relay (incoming data circuit) to the winding of the M relay (master control circuit).

Ten's Registration

The ten's digit of the first course point follows the end-of-identification symbol on the input tape. It was registered on the T relays when the TIC relay was released. The operated T relays lock over the circuit indicated in the preceding paragraph. Relay SRT was released upon the release of the TIC relay. Ground from a make contact of the operated TFS relay through a normally closed contact of the SRT relay operates the TCO relay.

If the operator had erred in punching the ten's digit, the "LTRS" code would appear on the tape at this time. In this case all T relays are operated, because the input tape contains perforations in all five possible positions. Ground on the TCG lead from the master control circuit through make contacts of the operated T-5, T-4, T-3', T-2', and T-1' relays operates the LET relay. The operation of the LET relay opens the locking path to the T relays. Ground from a make contact of the operated TFS relay through a make contact of the operated LET relay operates the STP relay of the incoming data circuit. The SRT relay is held operated by a ground on a normally closed contact of the TIC relay through a make contact of the operated MC relay, a normally closed contact of the SPA relay and a make contact of the operated LET relay.

Relay STP operated connects the ground on the WRG lead from the master control circuit through a make contact of the operated MC relay and normally closed contacts of the TIC, DS-O, DR-O, DQ-O, and DP-O relays to the winding of the input data tape transmitter magnet. The operation of this magnet advances the tape to the next position and releases all operated T relays. The release of the operated T relays releases the LET relay. The release of the LET relay recloses the T relay locking circuit and opens the operating path of the STP relay. The operating path of the SRT relay was broken when the LET relay was released, but that relay is held operated by a ground on the TCG lead from the master control circuit through normally closed contacts of the unoperated T relays and the DT-1 relay. Relay SRT is held operated to prevent the operation of the TCO relay, which would cause the tape contacts to be transferred prematurely to the U set of relays. The release of the STP relay causes the release of the tape transmitter magnet allowing the registration of the correct ten's digit of the first data point.

Tape Contact Transfer

The operation of the TCO relay transfers the tape contact circuit from the windings of the T relays to one side of make contacts of the UCI relay, which is not yet operated. The operated T relays are held in that position by their respective locking circuits. The STP relay operates from a ground on a normally closed contact of the UCI relay through a make contact of the operated TCO relay. The operation of the STP relay connects the WRG lead ground from the master control circuit to the winding of the input tape transmitter magnet. The operation of this magnet advances the tape to the next reading position and holds the tape contacts in the transmitter open, that is, in a nonreading position. The UCI relay now operates from battery on a make contact of the operated TCO relay through a normally closed contact of the SPA relay, a make contact of the operated STP relay, the No. 2 mark contact of the input data transmitter, a make contact of the operated TCO relay, and a normally made contact of the UCI relay. The UCI relay locks directly to the battery on the make contact of the operated TCO relay. The operation of the UCI relay closes the windings of the U set of relays to the space contacts of the data tape transmitter and causes the release of the STP relay. The release of the STP relay releases the transmitter magnet, allowing the contacts to close to the space bar, thereby reading the perforations representing the unit's digit. The SRT relay remains in a normal position, since some of the T relays are locked operated. No locking path is required for the TCO relay, which must remain operated during this time.

Unit's Registration

Assuming that the tape contacts of the input tape transmitter have just read the correct unit's digit, the U relays associated with the transmitter contacts, operate over make contacts of the operated UCI relay. The circuit waits in this position until the master control circuit reaches the point where the input information is required in the calculations. The master control circuit is not locked out of the incoming data circuit during the registration of the ten's and unit's digits; therefore, the person making the operational tape must be certain that enough other operations are performed between the beginning of registration and the transferring of the input information to the adder circuit to allow for the complete registration of the input number. No blocking circuit is provided for wrong perforations on the tape because this condition will be discovered during the transfer of the complement of the registered number to the adder circuit.

If the LTRS symbol appears on the input tape instead of the correct unit's digit, all of the U relays will operate. Ground from a make contact of the operated U-5 relay

through make contacts of the operated U-4, U-3', U-2', and U-1' relays operates the STP relay, which causes the input tape transmitter to advance the tape to the next reading position. The operation of the tape transmitter magnet opens the operate path of the U set of relays, allowing them to release. The release of the operated U relays releases the STP relay, which releases the transmitter magnet. The release of the magnet allows the transmitter contacts to close to the space bar in a reading position.

Transfer of Number to Adder

When the tape on the transmitter in the master control circuit reaches the position where the input data is required in the calculations, ground is placed on the ITB lead by the master control circuit. This ground operates the DT and DT-1 relays of the incoming data circuit through a make contact of the operated UCI relay. The DT-2 relay operates from a ground on a make contact of the operated DT-1 relay. With the DT set of relays operated, the grounds on the translator leads are connected to the proper adder leads to set the complement of the number registered on the T and U sets of relays on the V and W digit relays of the B part of the adder. Grounds are also connected to the 4 and 5 leads of the X, Y, and Z digit relays of the B adder register to complete the registration of the complement. Ground from a normally closed contact of the TC-1 relay through make contacts of the operated DT-1 and DT relays is placed on the ITB lead to the B register adder control circuit, causing it to receive the information from the incoming data circuit.

When the complete registration has been made in the B part of the adder, ground is connected to the STP lead. Ground on the STP lead operates the SPA relay through a make contact of the operated DT relay. The SPA relay operated opens the T relay locking circuits, causing each of the operated relays to release. The STP relay operates from ground on a make contact of the operated SPA relay and a normally closed contact of the OTC relay. The operation of the STP relay causes the operation of the data tape transmitter magnet, which advances the tape from the unit's perforations to the SPACE perforation; thereby releasing the operated U relays. The SRT relay operates from ground on a normally closed contact of the U-5 relay through similar contacts of the U-4, U-3, U-2, and U-1 relays and a make contact of the operated DT-1 relay. The TCO relay is now held operated by a ground on a make contact of the operated DT-2 relay. The OTC relay operates from a ground on a make contact of the operated SPA relay through a make contact of the operated SRT relay. Relay OCT operated opens the operate path of the STP relay, causing it to release, which in turn released the transmitter magnet.

Space Between Data Points

Incoming data tapes contain perforations for the two digits of each data point, and each pair of perforations is separated by a SPACE perforation. This SPACE perforation causes the U-3 and U-3' relays to operate from the DTG ground on the tape transmitter space bar through make contacts of the operated TCO and UCI relays. The TC relay is operated from a ground on a normally closed contact of the U-5 relay; through a similar contact of the operated U-3 relay; normally closed contacts of the U-2 and U-1 relays; and, make contacts of the operated OTC and SPA relays. The operation of the U-3 relay releases the SRT relay, which closes ground from the operated SPA relay to operate the TC-1 relay through a make contact of the operated TC relay. If the TC relay fails to operate, the release of the SRT relay would advance the data tape falsely, but the Relay Interpolator would block, because the TC-1 relay must operate for an advance of the master control operational tape.

The TC-1 relay locks to the operated DT-2 relay. The operation of the TC-1 relay opens the ITB lead to the B register adder control circuit, and operates the STP relay. The operated STP relay causes the data tape transmitter magnet to operate, which advances the input tape to the next position, releasing the U-3 and U-3' relays. The release of the U-3 relay releases the TC relay and causes the operation of the SRT relay. Relay SRT operated closes ground from a make contact of the operated TFS relay through the operated TC-1 to the STP lead to the master control circuit, causing the transmitter to advance the operational tape to the next code position. The advance of the master control circuit removes ground from the ITB lead, releasing the DT, DT-1, and DT-2 relays. The release of the DT set of relays opens the register leads to the B part of the adder and releases the TCO and TC-1 relays. The release of the TCO relay transfers the data tape contacts back to the T set of relays and releases the UCI relay. The release of the TC-1 relay opens ground from the STP lead, used to advance the master control circuit, and releases the STP relay of the incoming data circuit. The release of the STP relay releases the data tape transmitter magnet, allowing its contacts to close for the next ten's digit registration.

OUTPUT DATA CONTROL CIRCUIT

Refer to BTL Drawing B-30941 (Issue 6, dated 11 September 1943)

Printing Tape Identification Data

The operation and locking of the ST relay of the master control circuit causes a ground from a make contact of that relay to be placed on the CP lead of this circuit. When tape identification data from the input data circuit is to be perforated on the outgoing data tape, the ODS lead from that circuit to the outgoing data circuit is grounded. Ground on the ODS lead through normally closed contacts of the POT and CD relays operates the ST relay. Ground from a normally closed contact of the O relay through similar contacts of the 1, 2, 3, 4, 5, CK, TO, Z, CT, and CT-1 relays; and, a make contact of the operated ST relay operates the CD relay, which locks to the ground on the ODS lead. The operation of the CD relay causes the release of the ST relay.

At this time the P register contains the zeros, which the incoming data circuit has just placed there. Grounds from make contacts of the operated CD relay through normally closed contacts of the ST relay cause the operation of the translation relays corresponding to the number registered in the V, W, and X digits of the P register. If this circuit has functioned properly, ground is passed from the P4 relay through the operated relay of that group; the operated relays of the PO-O to P4-1, and the O-5 groups; and, normally closed contacts of the ALM and POT relays to operate the CT-1 relay. The translation of the number in the P register has nothing to do with the perforating of the identification tape data, except to provide the ground path to operate the CT-1 relay. The operation of the CT-1 relay cuts the A, B, C, and D leads from the incoming data circuit through to the segments of a standard teletype transmitter distributor.

The CP relay is held operated by battery through the stop segment of the teletype distributor. The operation of the CT-1 relay allows the ground on the CP lead to operate the W relay through a make contact of the operated CP relay and a normally closed contact of the Z relay. The operation of the W relay passes the ground on the CP lead to the winding of the transmitter distributor magnet through make contacts of the CP and W relays and a normally closed contact of the Z relay. As soon as the distributor arm leaves the stop segment, the operating circuit of the CP relay is opened, and the relay releases. The release of the CP relay opens the operate path to the transmitter

magnet, which then releases. The release of the CP relay also passes the CP start ground to the winding of the Z relay through a make contact of the operated W relay. The W and Z relays both lock to the CP ground through a make contact of the operated CT-1 relay. The revolution of the transmitter distributor arm over the commutator segments allows the transmitter to send the proper code to the reperforator unit.

When the arm returns to the stop segment, the CP relay reoperates and passes the CP start ground through a make contact of the operated Z relay to operate the TO relay. Ground from a make contact of the operated CT-1 relay through a make contact of the operated TO relay and normally closed contacts of the ODL key and the POT relay grounds the advance notice STP-1 lead to the incoming data circuit. This allows the control relays of that circuit to remove the ground from the ODS lead. The removal of ground from the ODS lead allows the CD relay to release and, in turn, the CT-1 relay. The release of the CT-1 relay opens the ground on the STP-1 lead and releases the W, Z, and TO relays. The circuit is now normal, and the incoming data circuit is allowed to read the next code perforation from its tape. The above process represents the relay operations necessary to perforate one code, as it appears on the incoming data tape, on the outgoing data tape. If more than one code serves as the identification information, the above operations are repeated as many times as are necessary.

Thirty-Segment Translator

Ground on the POT lead from the master control circuit operates the POT relay of this circuit. Ground from a make contact of the operated POT relay operates the ST relay through a normally closed contact of the CD relay. The operation of the POT relay opens the PD lead to prevent further use of the P register circuit while this operation is being performed. The CD relay then operates from a ground on the down-check lead, as described previously. The operation of the CD relay opens the operate lead of the ST relay, which releases. The POT relay locks to the ground on the CP lead from the master control circuit over a normally closed contact of the TO relay. The operation of the CD relay passes the POT operate ground to the STP lead, advancing the master control circuit. The master control circuit is now free to signal further operations as long as these operations do not involve the P register.

Grounds from make contacts of the operated CD relay through normally closed contacts of the ST relay are passed to the V, W, and X digit relays of the P register. The ground to the X digit of this register is connected to the X digit relays of the P register and the X set of translator relays in the following manner:

P Register X Digit Relay Operated	Outgoing Data Translator Relay Operated
00	X00
5	X 5
0	X 0
1	X 1-2
2	X 1-2
3	X 3-4
4	X 3-4

The ground to the W digit relays of the P register causes the W00 translator relay to operate if the OO W-digit relay is operated, or the W5 translator relay if the 5 W-digit relay is operated. The ground to the registered quinary part of the W digit of

the P register combines with the operated relays in the X set of translator relays to cause the operation of one of the O-5 set of relays according to the following table:

P Register Number in W and X digits	Outgoing Data Translator Relay Operated
00-07, 50-57	0
08-15, 58-65	1
16-24, 66-74	2
25-32, 75-82	3
33-40, 83-90	4
41-49, 91-99	5

For example, if the number in the W and X digits of the P register is 68 the 1 quinary lead from the W digit relays is grounded, and the operated X5 and X3-4 translator relays pass the ground on the 1 quinary lead to the winding of the 2 translator relay, operating it.

The ground from the registered quinary part of the V digit of the P register combines with the operated relay of the WOO-W5 pair to cause the operation of one of the PO-P4 set of relays. The connections are as follows:

P Register Number in V and W Digits	Outgoing Data Translator Relays Operated
00-04, 25-29, 50-54, 75-79	P0 and P0-0
05-09, 30-34, 55-59, 80-84	P1 and P1-1
10-14, 35-39, 60-64, 85-89	P2 and P2-1
15-19, 40-44, 65-69, 90-94	P3 and P3-1
20-24, 45-49, 70-74, 95-99	P4 and P4-1

For example, if the number 56 is registered in the V and W digits of the P register, the O quinary lead from the V digit relays is grounded and is passed through a make contact of the operated W5 translator relay to operate the P1 and P1-1 relays.

The connections between the operated relays in the O-5 and the PO-P4 sets of relays provide the translation of the number in the P register to one of the thirty segments, and supply ground to the proper a to e leads, representing the perforated coding of the selected segment. The segments are tabulated as follows:

Value in P Register	Number Symbol	Perforated Coding
000-007	0	a b c e
008-015	1	a b e
016-024	2	a
025-032	3	b d
033-040	4	e
041-049	5	a c e
050-057	6	a b c
058-065	7	b c
066-074	8	d e
075-082	9	b c e
083-090	10	a b
091-099	11	a c
100-107	12	a d

Value in P Register	Number Symbol	Perforated Coding
108-115	13	a c d
116-124	14	b d e
125-132	15	c e
133-140	16	a b d
141-149	17	a b c d
150-157	18	b e
158-165	19	d
166-174	20	a b d e
175-182	21	a e
183-190	22	a c d e
191-199	23	b c d
200-207	24	b c d e
208-215	25	a d e
216-224	26	c d
225-232	27	c d e
233-240	28	b
241-249	29	c

The above cycle is repeated three more times, adding first 250, then 500, and lastly 750 to each of the tabulated interval limits.

Ground is passed from the P4 relay through the operated relay of that group; and the operated relays of the PO-O to P4-1 and the 0-5 sets of relays; a normally closed contact of the ALM relay; and, a make contact of the operated POT relay to operate the CT relay. The proper a to e leads to the CT relay have been grounded in accordance with the translation of the number in the P register by the translator circuit just described. The operation of the CT relay passes these grounds to the corresponding segments of the transmitter distributor commutator. The master control circuit has been allowed to advance through the grounding of the STP lead from the POT lead ground through make contacts of the operated POT and CD relays. The circuit action for the operation of the transmitter distributor magnet has been described above. The operation of the TO relay causes the release of the POT relay to end the punching cycle and to return this circuit to normal.

Provision has been made for the visual checking of the code passed by the translator circuit to the transmitter distributor. The operation of the ODL (Out Data Lamps) key connects the L relay to ground from a make contact of the TO relay. The operation of the TO relay then connects the a to e leads from the translator to the a to e lamps on the control panel. The POT relay locks to a make contact on the operated ODL key; hence, this circuit is blocked from further advance until the transmitted code has been checked. The circuit will advance on the release of the ODL key.

PRINTER CONTROL CIRCUIT

Refer to BTL Drawing B-30984 (Sheet 1, Issue 4, dated 2 December 1944: Sheet 2, Issue 4, dated 29 December 1944)

Printing Carriage Return and Line Feed

The PCR (print carriage return and line feed) signal from the master control circuit operates the CR-1 relay. The operation of the CR-1 relay passes the ground on the PCR lead to the STP lead to the master control circuit allowing that circuit to advance.

The CR-1 relay locks through a normally closed contact of the EP relay to the STG lead grounded from the master control circuit. When ground from the master control circuit is placed on the PRT lead, the ST relay operates through a normally closed contact of the CD relay. The CD relay then operates from a ground on the CR relay that has checked the CR, LF, FIG, V, W, X, Y, Z, EP, and CD-1 relays down and has passed through a make contact of the operated ST relay. The operation of the CD relay releases the ST relay. The CD relay locks to the ground on the PRT lead. Ground from a make contact of the operated CD relay through normally closed contacts of the ST, Z, Y, X, W, V, FIG, and LF relays operates the CR relay.

The ST-1 relay operates from a ground on a make contact of the operated CR relay through normally closed contacts of the LF, FIG, V, W, X, Y, Z, and CD-1 relays. The CD-1 relay operates from ground on a normally closed contact of the FIG-1 relay through similar contacts of the TO, OO, 5, O, 1, 2, 3, 4, Z-1, and W-1 relays; and, a make contact of the operated ST-1 relay. The CD-1 relay locks to the ground on the ST lead. The operation of the CD-1 relay releases the ST-1 relay. Ground is now supplied to the d segment of the transmitter distributor from a make contact of the CD-1 relay through a normally closed contact of the ST-1 relay over the G-2 lead; and, make contacts of the operated CR and CR-1 relays. Ground is also supplied to the ST-2 lead from a make contact of the CD-1 relay through a normally closed contact of the ST-1 relay over the G-1 lead; and, a make contact of the operated CR relay.

Ground on the ST-2 (start) lead causes the W-1 relay to operate through a make contact of the operated CP (clutch pulse) relay and normally closed contacts of the Z-1 and ALM relays. The CP relay is held operated over the loop on the L lead to the transmitter distributor. The operation of the W-1 relay closes the ST-2 ground to the operate path of the magnet of the transmitter distributor (the CL lead) through a make contact of the operated CL relay and a normally closed contact of the Z-1 relay. The operate path of the transmitter distributor magnet. The W-1 and Z-1 relays lock to the ground on the ST-2 lead. When the distributor arm has completed its sweep of the segments, it comes to rest on the stop segment, reoperating the CP relay. Reoperation of the CP relay with the Z-1 relay operated causes the TO relay to operate from the ground on the ST-2 lead. Ground from a make contact of the operated CD relay, operates the LF relay through normally closed contacts of the ST, Z, Y, X, W, V, FIG, and LF relays; and, make contacts of the operated TO and CR relays. The operation of the LF relay releases the CR, TO, W-1, Z-1, and CD-1 relays. The LF relay locks to the ground on a make contact of the CD relay through normally made contacts of the ST, Z, Y, X, W, V, and FIG relays.

The ST-1 relay reoperates from a ground on a normally closed contact of the CR relay through a make contact of the operated LF relay; and, normally closed contacts of the FIG, V, W, X, Y, Z, and CD-1 relays. The CD-1 relay operates from ground on a normally closed contact of the FIG-1 relay through similar contacts of the TO, OO, 5, O, 1, 2, 3, 4, Z-1, and W-1 relays; and, a make contact of the operated ST-1 relay. The CD-1 relay releases the ST-1 relay and locks to the ground on the ST lead. Ground is now supplied to the b segment of the transmitter distributor from a make contact of the CD-1 relay through normally closed contacts of the ST-1 and CR relays and make contacts of the operated LF and CR-1 relays. Ground is also supplied to the ST-2 lead as before, which causes the transmitter distributor and its control circuit to function, sending the line feed signal to the printing mechanism.

Ground from a make contact of the operated CD relay operates the FIG relay through normally closed contacts of the ST, Z, Y, X, W, V, and FIG relays; a make contact of the operated TO relay; a normally closed contact of the CR relay; and, a make contact of the operated LF relay. The operation of the FIG relay releases the LF, TO, W-1, Z-1, and CD-1 relays. The FIG relay locks to the ground on a make contact of the operated CD relay through normally closed contacts of the ST, Z, Y, X, W, and V relays. The ST-1 relay reoperates from a ground on a normally closed contact of the CR relay; through a similar contact of the LF relay; a make contact of the operated FIG relay; and, normally closed contacts of the V, W, X, Y, Z, and CD-1 relays. The CD-1 relay reoperates as before. Ground from a make contact of the operated CD-1 relay operates the FIG-1 relay through normally closed contacts of the ST-1, CR and LF relays; and, make contacts of the operated FIG and CR-1 relays. The operation of the FIG-1 relay supplies the ground for the ST-2 lead, which causes the transmitter distributor and its control circuit to function. Grounds from make contacts of the operated FIG-1 relay have been supplied to the a, b, c, and e, leads to the transmitter distributor. This results in the sending of a blank or space indication to the teletypewriter unit.

Printing Three Spaces

If the PCR code has not been given by the master control circuit before the PRT signal is received, the CR-1 relay will not be operated when the PRT signal is received. The printer control circuit will function as described above except that the operation of the CR and LF relays will cause the c segment of the transmitter distributor to be grounded. This is the space signal to the teletype equipment. The FIG-1 function is exactly the same as was just described. There is no provision for obtaining more or less than three spaces between each number.

Printing Numbers From P Register

Following the sending of the line feed and carriage return signals or the three space signals, the V steering relay operates from a ground on the operated CD relay through normally closed contacts of the ST, Z, Y, X, W, and V relays; a make contact of the operated TO relay; normally closed contacts of the CR and LF relays; and, a make contact of the operated FIG relay. The operation of the V relay releases the FIG, FIG-1, TO, W-1, Z-1 and CD-1 relays. The V relay locks to ground on a make contact of the operated CD relay through normally closed contacts of the ST, Z, Y, X, and W relays. The ST-1 relay operates from a ground on a normally closed contact of the CR relay through similar contacts of the LF and FIG relays; a make contact of the operated V relay; and, normally closed contacts of the W, X, Y, Z, and CD-1 relays. The CD-1 relay operates as before, releasing the ST-1 relay and locking to the ground on the ST lead. Grounds are now supplied to the POO and PO leads to the V digit, P register, from make contacts of the operated CD-1 relay; through normally closed contacts of the ST-1 relay over the G-1 and G-2 leads; through normally closed contacts of the CR, LF, and FIG relays; and, make contacts of the operated V relay. The grounding of the POO and PO leads results in the registration of the V digit, P register, in the single digit storing register of the printer control circuit. The 00 and 4 relays have contacts so connected as to ground the a through e leads to the transmitter distributor in the following

manner:

Printer Control Register Relays Operated	Decimal Number Represented	Transmitter Leads to Printer Unit Grounded
00-0	0	a b c
00-1	1	a b d
00-2	2	a b e
00-3	3	a c d
00-4	4	a c e
5-0	5	a d e
5-1	6	b c d
5-2	7	b c e
5-3	8	b d e
5-4	9	c d e

The ST-2 lead is grounded from a make contact of the operated binary relay in the printer control register circuit through normal contacts of all unoperated quinary relays; and, a make contact of the operated quinary relay. The grounding of the ST-2 lead causes the transmitter distributor and its control circuit to function; thereby, recording the number in the single digit register of the printer control circuit on the teletype printer unit. The process is repeated in the operation of the W steering relay and the printing of the W digit from the P register. The X and Y digits are recorded in the same manner. At the present time the Z digit, P register, cannot be printed, but an extension of the wiring used for printing the first four digits is all that is required to make possible the printing of that digit.

Alarm Feature

If more than one quinary relay, or both binary relays, in the single digit storing register of this circuit are operated, the ALM relay will operate, blocking the advance of the master control circuit and connecting ground to the ORP lamp of the control panel.

EIGHT-SEGMENT TRANSLATOR CIRCUIT

Refer to BTL Drawing ES-826745 (Issue 7, sheets 1 and 3, dated 24 May 1945)

Ground from the master control circuit on the DID lead through a normal contact of the CDQ-1 relay operates the STQ-1 relay. The CDQ-1 relay then operates from a ground on a normally closed contact of the S1' relay through normally closed contacts of the S2' and S3' relays, the three sets of R-O to R-3 relays, Z, W, TO, STP, and C relays; and, a make contact of the operated STQ-1 relay. The CDQ-1 relay is held operated by the master control ground on the DID lead, and the STQ-1 relay releases upon the operation of the CDQ-1 relay. The CP (clutch pulse) relay is held operated from battery through the stop segment of the transmitter distributor over the L lead. The C relay operates through a normal contact of the STQ-1 relay from ground on a make contact of the operated CDQ-1 relay. The operation of the C relay connects ground through the operated relays of the W and X digits of the P register from the operated CDQ-1 relay and a normal contact of the STQ-1 relay to the segments of the transmitter distributor.

The connections are as follows:

Segment Grounded	Number Combination in P Register
a	0 or 1 in W digit; or, 2 in W digit and less than 5 in X digit.
b	2 in W digit and 5 or larger in X digit; or, 3 or 4 in W digit.
c	5 or 6 in W digit; or, 7 in W digit and less than 5 in X digit.
d	7 in W digit and 5 or larger in X digit; or, 8 or 9 in W digit.
e	V digit even.
f	V digit odd.

For a complete tabulation of this translation see the functional description of this circuit in a preceding paragraph of this report.

The W relay then operates from ground on a make contact of the operated CDQ-1 relay through a normally closed contact of the Z relay; a make contact of the operated CP relay; and normally closed contacts of the ALM and STQ-1 relays. This path is designated the ST-2 lead. The operation of the W relay passes the ST-2 ground to the CL lead which operates the step-magnet of the transmitter distributor. The operation of that magnet causes the distributor arm to pass over the segments, transmitting the desired code to the perforator unit. The CP relay releases when the distributor arm leaves the stop segment. The release of the CP relay passes the ST-2 lead ground through a make contact of the operated W relay to the winding of the Z relay. The W and Z relays lock to the ST-2 lead by-passing the CP relay.

The CP relay reoperates when the distributor arm returns to the stop segment. With the CP relay operated as well as the Z relay, the ST-2 lead ground is connected to the winding of the TO relay. The operation of the TO relay grounds the TO lead, which is connected to the STP lead to the master control circuit through a make contact of the operated CDQ-1 relay. Ground on the STP lead causes the master control transmitter to advance to the next code, removing the ground on the DID lead. The removal of ground from the DID lead returns the circuit to normal.

BINARY TRANSLATOR CIRCUIT

Refer to BTL Drawing ES-826745 (Issue 7, sheets 1 and 2 dated 24 May 1945)

Ground from the master control circuit on the DOD-1 lead through a normally closed contact of the CD-4 relay operates the ST-4 relay. The operation of the ST-4 relay releases any of the 0, 1, 0', or 1' relays which may be locked operated from the preceding problem. The CD-4 relay operates from a ground on the 1' relay that has

checked the 0, 1, 0', and 1' down and has passed through a make contact of the operated ST-4 relay. The operation of the CD-4 relay releases the ST-4 relay and cuts the 0 and 1 carry leads from the "V" digit of the adder through to the 0 and 1 relays. Either the 0 or 1 relay will operate, since the 0 or 1 lead will be grounded at this time. The CD-4 relay is now held operated by the master control ground on the DOD-1 lead. The operated 0 or 1 relay will lock to the ground on the STG lead through a normally closed contact of the ST-4 relay. The ground on this lead originates at a make contact of the ST-1 relay of the master control circuit. The operation of the 0 or 1 relay passes the ground on the DOD-1 lead through a make contact of the operated CD-4 relay to the STP lead, stepping the master control transmitter to the next code. The CD-4 relay releases at this time.

As soon as the master control circuit is ready for another registration, the DOD-2 lead is grounded by the proper master control code. Ground on the DOD-2 lead operates the SET relay, which cuts the 0 and 1 leads through to the 0' and 1' relays. Either the 0' or 1' relay will operate, since the 0 or 1 lead will be grounded at this time. The operated relay locks to the ground on the STG lead. The operation of the 0' or 1' relay passes the master control code ground to the STP lead through a normally closed contact of the CD relay, stepping the master control transmitter to the next code. The SET relay releases at this time.

The master control circuit then grounds the DOD lead, operating the ST relay through a normally closed contact of the CD relay. When the ST relay operates, it opens the lock (LK) lead to drop any previously operated relays in the R1-0 to R3-3 group of relays. A ground on the DW lead, originating at the S1' relay, passes through normally closed contacts of the S2' and S3' relays, each relay of the R1-0 to R3-3 group, Z, W, TO, and STP relays; and, a make contact of the operated ST relay to operate the CD relay. The CD relay locks on its secondary winding to the TO-L lead, which is grounded from the STG lead through a normally closed contact of the TO relay. The ST relay is released upon the operation of the CD relay. The operation of the CD relay passes the DOD lead ground to the STP lead advancing the master control transmitter.

The lock (LK) and the control (CON) leads are grounded from a make contact of the operated CD relay through normally closed contacts of the ST relay. Ground on the CON lead operates the S1 relay through normally closed contacts of the S2 and S3' relays. A make contact of the operated S1 relay provides the ground for the operation of the S1' relay. The CG ground from a normally closed contact of the PU relay through a similar contact on the PW relay is connected to the CG-1 lead through a normally closed contact of the SET relay. The PU and PW relays are located in the P register circuit. With the S1' relay up and the S2 relay down the CG-1 lead (grounded) is connected to the CG-2 lead. The CG-2 lead ground passes through a make contact of the operated CD relay and operates through the pair of operated relays in the 0, 1, 0' and 1' group and the S1' steering relay one of the R1 set of relays according to the following table:

Relays Operated	CG-2 Ground Operates
0 and 0'	R1-0
0 and 1'	R1-1
1 and 0'	R1-2
1 and 1'	R1-3

The operated relay in the R1 group locks to the ground on the LK lead.

The grounding of the DOD-1 lead by the master control circuit causes the operation of the ST-4 relay, which releases the operated relays in the 0, 1, 0' and 1' group. The CD-4 relay then operates releasing the ST-4 relay and causing the operation and locking-in of the proper 0 or 1 relay as described above. The operation of the 0 or 1 relay passes the ground on the DOD-1 lead to the STP lead causing the master control transmitter to step to the next code. The CD-4 relay releases at this time.

The master control circuit then grounds the DOD-2 lead operating the SET relay. The SET relay operated cuts the 0 and 1 leads through to the 0' and 1' relays. Either the 0' or 1' relay will operate, since the 0 or 1 lead will be grounded at this time. The operated 0 or 1 relay locks to ground on the STG lead through a normally closed contact of the ST-4 relay and a make contact of the operated ST-1 relay of the master control circuit. The DOD-2 master control ground passes through a make contact of the operated SET relay and a similar contact of the operated 0' or 1' relay. Since the CD relay is operated, the DOD-2 ground is connected to the STP-R lead, operating the STP relay. The CG and CG-1 leads were opened with the operation of the SET relay to prevent false grounding of the binary translator code leads, since the S1 and S1' steering relays are still operated.

The operation of the STP relay closes ground from the operated CD relay through normally closed contacts of the ST, S3, and S2 relays and make contacts of the operated S1, STP, and S1 relays to operate the S2 relay. The S2 relay locks to the CON ground, which bypasses the S1 and STP relays. Ground from the operated S1' relay through a make contact of the operated S2 relay is connected to the STP lead causing the master control transmitter to advance to the next code. The operated SET, STP, S1, and S1' relays are released at this time. Ground from normal contacts of the S1' relay through make contacts of the operated S2 relay causes the S2' relay to operate. The release of the SET relay reconnects the CG and CG-1 leads. The steering relays (S2' up and S3 down) connect the CG-1 lead to the CG-2 lead. Ground on the CG-2 lead through a make contact of the operated CD relay; the operated relays in the 0, 1, 0', and 1' group; and, the S2' steering relay operates one of the R2 set of relays, according to the following table:

Relays Operated	CG-2 Ground Operates
0 and 0'	R2-0
0 and 1'	R2-1
1 and 0'	R2-2
1 and 1'	R2-3

The operated relay in the R2 group locks to the ground on the LK lead.

The grounding of the DOD-1 lead by the master control circuit causes the operation of the ST-4 relay, which releases the operated relays in the 0, 1, 0' and 1' group. The CD-4 relay then operates releasing the ST-4 relay and causing the operation and locking-in of the proper 0 or 1 relay as described above. The operation of the 0 or 1 relay passes the ground on the DOD-1 lead to the STP lead causing the master control transmitter to step to the next code. The CD-4 relay releases at this time. The DOD-2 lead is then grounded by the master control circuit, and either the 0' or 1' relay is operated as described above. The CG and CG-1 leads are broken, while the S3 steering relay is being operated. Ground from the operated S2' relay through the operated S3 relay is connected to the STP lead, causing the master control transmitter to step to the next code. The operated SET, S2, STP and S2' relays release at this time. Ground from a normally closed contact of the S2' relay through a make contact of the operated S3 relay causes the S3' relay to operate. The release of the SET relay reconnects the CG and

CG-1 leads. The S3' steering relay connects the CG-1 lead to the CG-2 lead. Ground on the CG-2 lead through a make contact of the operated CD relay; the operated relays in the 0, 1, 0' and 1' group; and, the S3' steering relay operates one of the R3 set of relays, according to the following table:

Relays Operated	CG-2 Ground Operates
0 and 0'	R3-0
0 and 1'	R3-1
1 and 0'	R3-2
1 and 1'	R3-3

The operated relay in the R-3 group locks to the ground on the LK lead.

The operation of one of the R-3 relays places ground from the operated relay in the R1 group through a make contact of the operated relay of the R2 group on the ST-2 lead, which operates the W relay through a normally closed contact of the ALM relay; a make contact of the operated CP relay; and, a normally closed contact of the Z relay. The CP relay is operated from battery through the stop segment of the transmitter distributor over the L lead. The operation of the W relay passes the ST-2 ground to the C1 lead of the transmitter distributor. This ground energizes the clutch magnet and causes the transmitter distributor to send the code set up on the R sets of relays. The f segment of the transmitter distributor is not used. The other segments are ground as follows:

Segment	Condition for Grounding Segment
(a)	If either R3-0 or R3-1 is operated.
(b)	If either R2-0 or R2-2 is operated.
(c)	If either R2-0 or R2-1 is operated.
(d)	If either R1-0 or R1-2 is operated.
(e)	If either R1-0 or R1-1 is operated.

When the distributor's arm leaves the stop segment, the L lead is opened removing the operate battery of the CP relay. The release of the CP relay switches the ST-2 ground to the operate path of the Z relay through a make contact of the operated W relay. The W and Z relays lock to the ST-2 ground bypassing the CP relay. The operation of the Z relay and the reoperation of the CP relay, when the transmitter arm has completed its sweep, cause the operation of the TO relay from the ST-2 ground. The operation of the TO relay breaks the TO-L lead, releasing the CD relay. The release of the CD relay opens the lock and control (LK and CON) leads to the R group and steering relays respectively; thereby, releasing all relays in these two groups. Ground is removed from the ST-2 lead. The circuit is now normal and ready for another sequence of binary translation orders from the master control circuit.

* * *

APPENDIX II - PREPARATION OF TAPES FOR DYNAMIC TESTER MODEL I

One function of the Relay Interpolator is to compute interpolated data for each one-twentieth second interval of time from aircraft flight position data tabulated at one-second intervals of time. The position coordinates of the target are elevation, bearing, and slant range. Each of the coordinates are interpolated in separate operations by the Relay Interpolator. The three one-second input data tapes are prepared as described in a previous section of this report. Tapes containing the gun order quantities expected from the mechanism being tested are prepared in a similar manner. These quantities are gun elevation order (or elevation lead) and gun train order (azimuth lead). The tapes prepared by the Relay Interpolator are for use with dynamic testers requiring signals in the form of perforations in a paper tape. For this reason the output of the Relay Interpolator is recorded directly on tape by a reperforator unit in the code system used by the testers.

INTERPOLATION METHOD

A consideration of the position coordinates during a target's course indicates that ordinary linear interpolation is not satisfactory, especially in the cross-over region. It is then necessary to perform the interpolation upon a selected polynomial which closely follows the given function for a short interval of time. Any desired degree of accuracy may be obtained by this method, but the accuracy consideration must be balanced against the amount of arithmetical computations it is practicable to perform. Consideration of this balance indicates that the selected polynomial should be of the third degree i.e., the curve for the interpolation is fitted to the values of four adjoining one-second points. The interpolation on this curve for intermediate values requires a knowledge of the first, second, and third differences of the function.

The constants of the selected polynomial will change as the interpolation progresses. In order to anticipate this change, an extrapolation is made to determine the value of the function two seconds ahead in time; and, this computed value is compared with the actual value (previously perforated on the teletype tape serving as the input record) to obtain an error value. Corrections proportional to the magnitude of this error are applied to the coefficients of the polynomial. After the polynomial has been adjusted to agree more closely with the four given points, interpolations for twenty points (up to and including the one-second value) are made. It should be noted that, while the polynomial is fitted to four one-second values, the interpolation is made only between the P_0 and P_{20} values. The entire process of extrapolation and interpolation is then repeated. This method insures definite continuity between interpolated points and also causes the interpolated points to fit the given curve more closely.

The development of the polynomial for this interpolation problem is based upon the assumption that an equation whose curve passes through four successive one-second data points produces satisfactory interpolation results. The various steps required in obtaining such an interpolation formula from the first, second, and third differences are:

1. Build up an empirical equation satisfying the second and third data points, P_0 P_{20}.

2. Build up an empirical equation satisfying the second and fourth data points, P_0 and P_{40}.

3. Build up an empirical equation satisfying the first and second data points, P_{-20} and P_0.

Determine values for the coefficients which satisfy all three empirical equations.

The first equation will be developed in detail by including all first, second, and third differences. In Table I "Q" represents the first difference; "R" the second difference; and "S" the third difference. Since the desired accuracy can be obtained by carrying out the computations to the third difference, the value for S is constant for the short time covered by the particular group of twenty calculations.

Table I - True Diagram of Differences for Dynamic Tester Model I

Time in Seconds	Value	Differences		
		First	Second	Third
-0.10	P_{-2}			
		Q_{-1}		
-0.05	P_{-1}		R_0	
		Q_0		S
0.00	P_0		R_1	
		Q_1		S
0.05	P_1		R_2	
		Q_2		S
0.10	P_2		R_3	
		Q_3		S
0.15	P_3		R_4	
0.80	P_{16}		R_{17}	
		Q_{17}		S
0.85	P_{17}		R_{18}	
		Q_{18}		S
0.90	P_{18}		R_{19}	
		Q_{19}		S
0.95	P_{19}		R_{20}	
		Q_{20}		S
1.00	P_{20}		R_{21}	
		Q_{21}		
1.05	P_{21}			

From the above table it is possible to determine any P value in terms of Q_0, R_0, and S. In particular, the value of P_{20} must be determined. P_1 is equal to $P_0 + Q_1$.

$Q_1 = Q_o + R_1$ and $R_1 = R_o + S$; therefore, $P_1 = P_o + Q_o + R_o + S$. By the same process the succeeding values are found to be:

$$P_2 = P_o + 2Q_o + 3R_o + 4S$$

$$P_3 = P_o + 3Q_o + 6R_o + 10S$$

$$P_4 = P_o + 4Q_o + 10R_o + 20S$$

$$P_5 = P_o + 5Q_o + 15R_o + 35S$$

$$\cdots\cdots\cdots\cdots$$

$$P_{18} = P_o + 18Q_o + 171R_o + 1140S$$

$$P_{19} = P_o + 19Q_o + 190R_o + 1330S$$

$$P_{20} = P_o + 20Q_o + 210R_o + 1540S$$

The equation for P_{20} is the first equation required. The Relay Interpolator in computing interpolations in accordance with this formula will perform 200 operations, each of which requires about .2 to .3 of a second. A mathematical analysis shows that the method may be simplified without impairing the accuracy of the results. Since the second and third differences are usually quite small, it is possible to add the second differences every second time and the third differences every fourth time instead of as indicated in Table I. With this simplification only 110 operations are required, and this represents a reduction of 45% in the required computing time. A "difference" diagram made up on this new basis is given in Table II below:

Table II - Simplified Diagram of Differences for Dynamic Tester Model I.

Value	Differences		
	First	Second	Third
P_{-3}			
	Q_{-1}		
P_{-2}		R_o	
	Q_o		
P_{-1}			S
	Q_o		
P_o		R_1	
	Q_1		
P_1			
	Q_1		
P_2		R_1	
	Q_2		
P_3			S
	Q_2		
P_4		R_2	
	Q_3		
P_5			
	Q_3		
P_6		R_2	
	Q_4		
P_7			S
	Q_4		
P_8		R_3	
	Q_5		
P_9			

The empirical equation for the P_o and P_{20} points, using the above diagram of differences, is

$$P_{20} = P_o + 20Q_o + 110R_o + 250S.$$

From the same pattern the other two empirical equations are:

$$P_{40} = P_o + 40Q_o + 420R_o + 1650S$$

$$P_{-20} = P_o - 20Q_o + 90R_o - 100S.$$

CORRECTION AND SMOOTHING OF DATA

If the computed value for P_{40} does not agree with the corresponding value on the data tape, the resultant error is used to determine the corrections which must be applied to Q_o, R_o, and S in order to make the curve fit the data points. The procedure is to develop a polynomial, where the values of Q_o, R_o, and S are functions of the error E. It is assumed that P_{-20} and P_o are correctly satisfied by the current values of Q_o, R_o, and S, but that P_{20} and P_{40} must have correction factors added which involve the quantity E. These conditions are summarized:

$P_{-20} = P'_{-20}$

$P_o = P'_o$

$P_{20} = P'_{20} + K_2 E$ (where K_2 is the portion of the error for P_{40} which must be reflected in the correction for P_{20}).

$P_{40} = P'_{40} + K_1 E$ (where K_1 is the portion of the error for P_{40} which must be reflected in the correction in order to have smooth data.)

The values selected for K_1 and K_2 have a distinct bearing on the resulting polynomial. A study regarding the selection of the proper values for these arbitrary constants has been made; and, on the basis of that analysis, the best choice of values is $K_1 = 1.0$ and $K_2 = 0.3$. The Relay Interpolator in determining the error makes the tape value the subtrahend in the subtraction operation; therefore, where the tape value is higher than the computed value, E (the error) is negative. Under such a condition, the correcting function should be positive, so the values for K_1 and K_2 must be made negative. With the above information, it is now possible to set down the equations for the new polynomial as follows:

$$-20\,Q_o + 90R_o - 100S = 0$$

$$20\,Q_o + 110R_o + 250S = K_2E = -0.3E$$

$$40\,Q_o + 420R_o + 1650S = K_1E = -E.$$

This system of equations may be solved simultaneously in terms of E, and the solution is:

$Q_o = -.0058E$, rounded off to $-.006E$

$R_o = -.00142E$, rounded off to $-.0014E$

$S = -.0001E$

These values are added to the existing values for Q_o, R_o, and S, when it is desired to adjust the coefficients of the polynomial to a new set of data.

OPERATIONAL SEQUENCE TAPE

The sequence of master control operations, which results in the extrapolation to P_{40}; the determination of the error between the actual value and the given value; the correction of the first, second, and third differences; and, the computation and recording of values P_1 through P_{20}, are as follows:

Oper. No.	Steering Relay Operated	Perforator Key Number	Function
1	NC	20	New Course Start
2	CK	LTRS	Check Transmitting Leads
3	PA	4	
4	1QB	5	
5	DC	24	
6	CA	8	
7	DC	24	Add 40 "Q" to "P"
8	CA	8	
9	DC	24	
10	CA	8	
11	DC	24	
12	CA	8	
13	RB	13	
14	DC	24	
15	CA	8	Add 20 "R"
16	DC	24	
17	CA	8	
18	1RB	27	
19	DC	24	
20	CA	8	
21	DC	24	
22	CA	8	Add 400 "R"
23	DC	24	
24	CA	8	
25	DC	24	
26	CA	8	
27	SB	17	
28	DC	24	
29	CA	8	
30	DC	24	
31	CA	8	
32	DC	24	Add 50 "S"
33	CA	8	
34	DC	24	
35	CA	8	
36	DC	24	
37	CA	8	

Oper. No.	Steering Relay Operated	Perforator Key Number	Function
38	1SB	23	
39	DC	24	
40	CA	8	
41	DC	24	
42	CA	8	
43	DC	24	
44	CA	8	
45	DC	24	Add 600 "S"
46	CA	8	
47	DC	24	
48	CA	8	
49	DC	24	
50	CA	8	
51	2SB	19	
52	DC	24	Add 1000 "S"
53	CA	8	
54	ITB	14	Incoming Tape Data
55	DE	3	Computed Error
56	QA	15	
57	E3B	16	
58	DC	24	
59	CA	8	
60	DC	24	
61	CA	8	
62	DC	24	Correct Q by .006E
63	CA	8	
64	DC	24	
65	CA	8	
66	DC	24	
67	CA	8	
68	DQ	0	Store Q
69	RB	13	
70	E3A	7	
71	DC	24	
72	CB	25	
73	DC	24	
74	CB	25	Correct "R" by .014E
75	DC	24	
76	CB	25	
77	DC	24	
78	CB	25	
79	E2A	6	
80	DR	26	Store "R"

Oper. No.	Steering Relay Operated	Perforator Key Number	Function
81	SB	17	
82	E3A	7	Correct "S" by .001E
83	DS	12	Store "S"
84	DC	24	
85	CA	8	
86	RB	13	
87	DR	26	
88	R1B	22	
89	QA	15	Compute P_1
90	DQ	0	
91	QA	15	
92	PB	21	
93	DP	1	
94	POT	18	Perforate coded value of P_1
95	PB	21	
96	DP	1	Compute P_2
97	POT	18	Perforate coded value of P_2
98	R1B	22	
99	DQ	0	
100	QA	15	Compute P_3
101	PB	21	
102	DP	1	
103	POT	18	Perforate coded value of P_3
104	PB	21	
105	DP	1	Compute P_4
106	POT	18	Perforate coded value of P_4
107	CA	8	
108	RB	13	
109	DR	26	
110	R1B	22	
111	QA	15	Compute P_5
112	DQ	0	
113	QA	15	
114	PB	21	
115	DP	1	
116	POT	18	Perforate coded value of P_5
117	PB	21	
118	DP	1	Compute P_6

Oper. No.	Steering Relay Operated	Perforator Key Number	Function
119	POT	18	Perforate coded value of P_6
120	R1B	22	
121	DQ	0	
122	QA	15	Compute P_7
123	PB	21	
124	DP	1	
125	POT	18	Perforate coded value of P_7
126	PB	21	
127	DP	1	Compute P_8
128	POT	18	Perforate coded value of P_8
129	CA	8	
130	RB	13	
131	DR	26	
132	R1B	22	
133	QA	15	Compute P_9
134	DQ	0	
135	QA	15	
136	PB	21	
137	DP	1	
138	POT	18	Perforate coded value of P_9
139	PB	21	
140	DP	1	Compute P_{10}
141	POT	18	Perforate coded value of P_{10}
142	R1B	22	
143	DQ	0	
144	QA	15	Compute P_{11}
145	PB	21	
146	DP	1	
147	POT	18	Perforate coded value of P_{11}
148	PB	21	
149	DP	1	Compute P_{12}
150	POT	18	Perforate coded value of P_{12}

Oper. No.	Steering Relay Operated	Perforator Key Number	Function
151	CA	8	
152	RB	13	
153	DR	26	
154	R1B	22	
155	QA	15	Compute P_{13}
156	DQ	0	
157	QA	15	
158	PB	21	
159	DP	1	
160	POT	18	Perforate coded value of P_{13}
161	PB	21	
162	DP	1	Compute P_{14}
163	POT	18	Perforate coded value of P_{14}
164	R1B	22	
165	DQ	0	
166	QA	15	Compute P_{15}
167	PB	21	
168	DP	1	
169	POT	18	Perforate coded value of P_{15}
170	PB	21	
171	DP	1	Compute P_{16}
172	POT	18	Perforate coded value of P_{16}
173	CA	8	
174	RB	13	
175	DR	26	
176	R1B	22	
177	QA	15	Compute P_{17}
178	DQ	0	
179	QA	15	
180	PB	21	
181	DP	1	
182	POT	18	Perforate coded value of P_{17}
183	PB	21	
184	DP	1	Compute P_{18}
185	POT	18	Perforate coded value of P_{18}

Oper. No.	Steering Relay Operated	Perforator Key Number	Function
186	R1B	22	
187	DQ	0	
188	QA	15	Compute P_{19}
189	PB	21	
190	DP	1	
191	POT	18	Perforate coded value of P_{19}
192	PB	21	
193	DP	1	Compute P_{20}
194	POT	18	Perforate coded value of P_{20}

* * *

APPENDIX III

PREPARATION OF TAPES FOR DYNAMIC TESTER MODEL II

The Dynamic Tester Model II uses six-hole teletype tapes of special opaque paper to supply input data and output checking data for laboratory testing of "distorting" devices, such as gun fire control computers. The tester is divided into two parts: the course generator; and, the checking circuit. The course generator has six channels for supplying up to six "present position" target coordinates, such as train angle, elevation angle, and range. The choice of coordinate system is entirely optional. These data are generated in the form of synchro information, but for a maximum of three channels they may be converted to actual shaft rotation by means of external follow-up units. The checking circuit requires synchro data for a maximum of three channels from the device being tested. The synchro data are supplied to a "pseudo synchro" in the tester. The pseudo synchro introduces angular rotation equal, but opposite in sign, to the computed correct output of the device being tested. The angular errors for each of the three channels are graphed on recording meters. The correct data for the three quantities being checked are recorded on a single teletype tape which is fed to Channel No. 7 of the Dynamic Tester.

INTERPOLATION METHOD

The first six channels of the Dynamic Tester Model II requires signals from teletype tapes at time intervals of one-sixieth of a second. The computations may be somewhat simplified by considering this interpolation as being one-thirtieth of given one-half second interval of time. On this basis a difference formula may be devised as in Appendix II. In this case, it is necessary to add the second difference every second time and to add the third difference every sixth time.

A partial difference diagram is given in Table 3 below:

Table 3 - Simplified Diagram of Differences for Dynamic Tester Model II

Value	Differences		
	First	Second	Third
P_{-3}			
	Q_{-1}		
P_{-2}		R_0	
	Q_0		
P_{-1}			S
	Q_0		
P_0		R_1	
	Q_1		
P_1			
	Q_1		
P_2		R_1	
	Q_2		
P_3			
	Q_2		
P_4		R_1	
	Q_3		
P_5			S
	Q_3		
P_6		R_2	
	Q_4		
P_7			
	Q_4		
P_8			

A slightly different technique is used to obtain the interpolation formula, because it is necessary that the interpolated points more nearly coincide with the given function than was the case in the previous interpolation problem. The equations for the P_{-60}, P_{-30}, and P_{30} points are:

$$P_{-60} = -60\,Q_0 + 870\,R_0 - 2420S$$
$$P_{-30} = -30\,Q_0 + 210\,R_0 - 240S$$
$$P_{30} = 30\,Q_0 + 240\,R_0 + 540S$$

The extrapolated value of P_{30} will not in general agree with the known value. If it is assumed that the P_{-60} and P_{-30} values lie on the curve of the given function, then

$$-60\,Q_0 + 870\,R_0 - 2420S = 0$$
$$-30\,Q_0 + 210\,R_0 - 240S = 0$$
$$30\,Q_0 + 240\,R_0 + 540S = -.9E$$

E is the amount by which the extrapolated and actual values at P_{30} do not agree. The .9 is introduced as a smoothing factor to maintain the continuity between sets of thirty interpolated points. These three equations may be solved for Q_0, R_0, and S in terms of E. The solution is $Q_0 = -.009E$, $R_0 = -.0017E$, and $S = -.0004E$. These values represent the proportionate amount of the error that must be reflected in the Q_0, R_0, and S values in order to make those values yield the cubic satisfying the above equations.

After the corrections of Q_0, R_0, and S have been made the interpolations for the thirty values from P_1 to and including P_{30} are made.

OPERATIONAL SEQUENCE TAPES

The sequence of master control operations, which results in the extrapolation to P_{30}; the determination of the error between the actual and the given value; the correction of the first, second, and third differences; and, the computation and recording of values P_1 through P_{30}, is as follows:

Oper No.	Steering Relay Operated	Perforator Key Number	Function
1	NC	20	New Course Start
2	QA	15	
3	RB	13	Add Q to 10R
4	DC	24	
5	CA	8	
6	SB	17	Add 10S to Q + 10R
7	DC	24	
8	CA	8	
9	CB	25	
10	DC	24	
11	CA	8	
12	CB	25	Obtain 8Q + 80R + 80S
13	DC	24	
14	CA	8	
15	CB	25	
16	DC	24	
17	CB	25	
18	QA	15	
19	DC	24	Obtain 10Q + 80R + 80S
20	CB	25	
21	DC	24	
22	CA	8	
23	1SB	23	Obtain 10Q + 80R + 180S
24	DC	24	
25	CA	8	
26	CB	25	
27	DC	24	Obtain 30Q + 240R + 540S
28	CA	8	
29	DC	24	
30	CA	8	
31	PB	21	Obtain P + 30Q + 240R + 540S
32	DC	24	

Oper. No.	Steering Relay Operated	Perforator Key Number	Function
33	CA	8	
34	ITB	14	Subtract known value of P_{30}, obtaining error value.
35	DE	3	
36	E3A	7	
37	E3B	16	
38	DC	24	
39	CA	8	
40	CB	25	
41	DC	24	
42	CA	8	
43	CB	25	
44	DC	24	Correct Q by .009E
45	CB	25	
46	E3A	7	
47	DC	24	
48	CB	25	
49	QA	15	
50	DQ	0	
51	E2A	6	
52	E3B	16	
53	DC	24	
54	CA	8	
55	DC	24	
56	CA	8	
57	DC	24	
58	CA	8	
59	DC	24	Correct R by .017E
60	CA	8	
61	DC	24	
62	CA	8	
63	DC	24	
64	CA	8	
65	DC	24	
66	CA	8	
67	RB	13	
68	DR	26	
69	E3A	7	
70	E3B	16	
71	DC	24	
72	CA	8	
73	CB	25	Correct S by .004E
74	DC	24	
75	CA	8	
76	SB	17	
77	DS	12	
78	DC	24	

Oper. No.	Steering Relay Operated	Perforator Key Number	Function
79	CA	8	
80	RB	13	
81	DR	26	
82	QA	15	
83	R1B	22	
84	DQ	0	Compute P_1
85	QA	15	
86	PB	21	
87	DP	1	
88	DID	28	Perforate coded value of P_1
89	PB	21	
90	DP	1	Compute P_2
91	DID	28	Perforate coded value of P_2
92	R1B	22	
93	DQ	0	
94	QA	15	Compute P_3
95	PB	21	
96	DP	1	
97	DID	28	Perforate coded value of P_3
98	PB	21	
99	DP	1	Compute P_4
100	DID	28	Perforate coded value of P_4
101	R1B	22	
102	DQ	0	
103	QA	15	Compute P_5
104	PB	21	
105	DP	1	
106	DID	28	Perforate coded value of P_5
107	PB	21	
108	DP	1	Compute P_6
109	DID	28	Perforate coded value of P_6
110	CA	8	
111	RB	13	
112	DR	26	
113	QA	15	Compute P_7
114	R1B	22	
115	DQ	0	
116	QA	15	
117	PB	21	
118	DP	1	

Oper. No	Steering Relay Operated	Perforator Key Number	Function
119	DID	28	Perforate coded value of P_7
120 121	PB DP	21 1	Compute P_8
122	DID	28	Perforate coded value of P_8
123 124 125 126 127	R1B DQ QA PB DP	22 0 15 21 1	Compute P_9
128	DID	28	Perforate coded value of P_9
129 130	PB DP	21 1	Compute P_{10}
131	DID	28	Perforate coded value of P_{10}
132 133 134 135 136	R1B DQ QA PB DP	22 0 15 21 1	Compute P_{11}
137	DID	28	Perforate coded value of P_{11}
138 139	PB DP	21 1	Compute P_{12}
140	DID	28	Perforate coded value of P_{12}
141 142 143 144 145 146 147 148 149	CA RB DR QA R1B DQ QA PB DP	8 13 26 15 22 0 15 21 1	Compute P_{13}
150	DID	28	Perforate coded value of P_{13}
151 152	PB DP	21 1	Compute P_{14}
153	DID	28	Perforate coded value of P_{14}

Oper. No.	Steering Relay Operated	Perforator Key Number	Function
154	R1B	22	
155	DQ	0	
156	QA	15	Compute P_{15}
157	PB	21	
158	DP	1	
159	DID	28	Perforate coded value of P_{15}
160	PB	21	Compute P_{16}
161	DP	1	
162	DID	28	Perforate coded value of P_{16}
163	R1B	22	
164	DQ	0	
165	QA	15	Compute P_{17}
166	PB	21	
167	DP	1	
168	DID	28	Perforate coded value of P_{17}
169	PB	21	
170	DP	1	Compute P_{18}
171	DID	28	Perforate coded value of P_{18}
172	CA	8	
173	RB	13	
174	DR	26	
175	QA	15	Compute P_{19}
176	R1B	22	
177	DQ	0	
178	QA	15	
179	PB	21	
180	DP	1	
181	DID	28	Perforate coded value of P_{19}
182	PB	21	
183	DP	1	Compute P_{20}
184	DID	28	Perforate coded value of P_{20}
185	R1B	22	
186	DQ	0	
187	QA	15	Compute P_{21}
188	PB	21	
189	DP	1	

Oper. No.	Steering Relay Operated	Perforator Key Number	Function
190	DID	28	Perforate coded value of P_{21}
191	PB	21	
192	DP	1	Compute P_{22}
193	DID	28	Perforate coded value of P_{22}
194	R1B	22	
195	DQ	0	
196	QA	15	Compute P_{23}
197	PB	21	
198	DP	1	
199	DID	28	Perforate coded value of P_{23}
200	PB	21	
201	DP	1	Compute P_{24}
202	DID	28	Perforate coded value of P_{24}
203	CA	8	
204	RB	13	
205	DR	26	
206	QA	15	
207	R1B	22	Compute P_{25}
208	DQ	0	
209	QA	15	
210	PB	21	
211	DP	1	
212	DID	28	Perforate coded value of P_{25}
213	PB	21	
214	DP	1	Compute P_{26}
215	DID	28	Perforate coded value of P_{26}
216	R1B	22	
217	DQ	0	
218	QA	15	Compute P_{27}
219	PB	21	
220	DP	1	
221	DID	28	Perforate coded value of P_{27}
222	PB	21	
223	DP	1	Compute P_{28}
224	DID	28	Perforate coded value of P_{28}

Oper. No.	Steering Relay Operated	Perforator Key Number	Function
225	R1B	22	Compute P_{29}
226	DQ	0	
227	QA	15	
228	PB	21	
229	DP	1	
230	DID	28	Perforate coded value of P_{29}
231	PB	21	Compute P_{30}
232	DP	1	
233	DID	28	Perforate coded value of P_{30}

The method used by the Relay Interpolator to translate gun orders from the decimal system to the binary number system has been described previously. This translation is required in the preparation of the check tape for Channel No. 7. The master control sequence to accomplish the translation and to place the translation in the proper form on the output teletype tape is as follows:

Oper. No.	Steering Relay Operated	Perforator Key Number	Function
1	LTRS	LTRS	Check transmitting leads
2	NC	20	New Course Start
3	QA	15	Read 1st half of input
4	ITB	14	
5	DE	3	
6	E2A	6	Transfer to S
7	1QB	5	
8	DS	12	
9	QA	15	Read 2nd half of input
10	ITB	14	
11	DE	3	
12	E2A	6	Transfer to C
13	1QB	5	
14	DC	24	
15	2SB	19	Combine halves on C
16	CA	8	
17	DC	24	
18	CA	8	Obtain 1st Binary Digit
19	CB	25	
20	DOD-1	11	
21	DC	24	

Oper. No.	Steering Relay Operated	Perforator Key Number	Function
22	CA	8	
23	CB	25	
24	DOD-2	29	Obtain 2nd binary Digit
25	DOD	10	
26	DC	24	
27	CA	8	
28	CB	25	
29	DOD-1	11	Obtain 3rd Binary Digit
30	DC	24	
31	CA	8	
32	CB	25	
33	DOD-2	29	Obtain 4th Binary Digit
34	DC	24	
35	CA	8	
36	CB	25	Obtain 5th Binary Digit
37	DOD-1	11	
38	DOD-2	29	
39	DC	24	Perforate First Five Digits
40	CA	8	
41	CB	25	
42	DOD-1	11	Obtain 6th Binary Digit
43	DC	24	
44	CA	8	
45	CB	25	
46	DOD-2	29	Obtain 7th Binary Digit
47	DOD	10	
48	DC	24	
49	CA	8	
50	CB	25	
51	DOD-1	11	Obtain 8th Binary Digit
52	DC	24	
53	CA	8	
54	CB	25	
55	DOD-2	29	Obtain 9th Binary Digit
56	DC	24	
57	CA	8	
58	CB	25	Obtain 10th Binary Digit
59	DOD-1	11	
60	DOD-2	29	Perforate second Five Digits

Oper. No.	Steering Relay Operated	Perforator Key Number	Function
61	PB	21	
62	QA	15	Place Zeros on Adder Registers
63	DOD-1	11	
64	DOD-2	29	
65	DOD	10	
66	DOD-1	11	Perforate 1st Blank on output tape.
67	DOD-2	29	
68	DOD-1	11	
69	DOD-2	29	
70	DOD-1	11	
71	DOD-2	29	
72	DOD	10	
73	DOD-1	11	Perforate 2nd Blank on Output tape.
74	DOD-2	29	
75	DOD-1	11	
76	DOD-2	29	
77	DOD-1	11	
78	DOD-2	29	
79	DOD	10	
80	DOD-1	11	Perforate 3rd Blank on Output tape.
81	DOD-2	29	
82	DOD-1	11	
83	DOD-2	29	
84	DOD-1	11	
85	DOD-2	29	
86	DOD	10	
87	DOD-1	11	Perforate 4th Blank on Output tape.
88	DOD-2	29	
89	DOD-1	11	
90	DOD-2	29	

The Relay Interpolator is not capable of handling a four-digit input efficiently, and for this reason the preparation of the input tape for the binary translation process is somewhat more complicated than the preparation of the usual input tape. A four-digit number must be introduced in two separate operations, since the Relay Interpolator can accept but two digits from the input tape. Furthermore, the introduced digits are in the complement form, which necessitates a transfer to the E register to obtain the normal form. When transferring from the E register to either part of the adder circuit, a transfer of the 9's complement is made. In order to rectify this situation, it is necessary to increase the first pair of a four-digit input gun order by one, if the second pair of digits is greater than fifty. For example, the number 9804 is perforated on the input tape as A98A04; the number 9854 is perforated as A99A54; and, the number 9850, is perforated A98A50. These corrections are made by the operator as the input tape is prepared. The process is slow and tedious and could be eliminated by modifying the Relay Interpolator input circuit to read four-digit numbers from the input tape.

Before the Channel No. 7 tape is calculated by the Relay Interpolator, it is well to check the input tape for verification purposes. This may be done with the following master control sequence, and the Relay Interpolator output is connected to the teletype printer.

Oper. No.	Steering Relay Operated	Perforator Key Number	Function
1	LTRS	LTRS	Check transmitting Leads
2	NC	20	New Course Start
3 4 5	QA ITB DE	15 14 3	Read 1st Half of Input
6 7 8	E2A 1QB DS	6 5 12	Transfer to S
9 10 11	QA ITB DE	15 14 3	Read 2nd Half of Input
12 13 14	E2A 1QB DC	6 5 24	Transfer to C
15 16 17	2SB CA DP	19 8 1	Combine Halves on P
18	PCR	10	Print Carriage Return (Used Every 10th Cycle)
19	PRT	9	Print Number in P Register

PRN C-4748-2-27-48-100