NRL REPORT R-3395

AN/APA-64 PULSE ANALYZER

APPROVED FOR PUBLIC RELEASE - DISTRIBUTION UNLIMITED

DECLASSIFIED: By authority of
DOD DIR 5200.10
Cite Authority Date
Doris A. Rappard 2028
Entered by NRL Code

NAVAL RESEARCH LABORATORY

WASHINGTON, D.C.

NRL REPORT R-3395

AN/APA-64 PULSE ANALYZER

G. D. Morehouse

December 1, 1948

Approved by.

Mr. F. M. Gager, Head, Special Research Section
Dr. R. M. Page, Superintendent, Radio Division III

NAVAL RESEARCH LABORATORY
CAPTAIN H. A. SCHADE, USN, DIRECTOR
WASHINGTON, D.C.

DISTRIBUTION

BuAer	10
BuShips	10
CNO	
Attn: OP-413-C-2	1
Attn: OP-34	1
Attn: OP-20-S	1
ONR	
Attn: Code N-482	2
Dir., USNEL	2
Cdr., USNOTS	
Attn: Reports Unit	2
OCSigO	
Attn: Ch. Eng. & Tech. Div., SIGTM-S	1
CO, SCEL	
Attn: Dir. of Engineering	2
Dir., Evans Signal Lab.	1
BAGR, CD, Wright-Patterson Air Force Base	
Attn: BAU-ADD	1
CG, AMC, Wright-Patterson Air Force Base	
Attn: Air Rad. Lab.	1
Attn: Eng. Div., Electronics Subdiv., MCREEO-2	1
CO, 4151st Air Force Base Unit, Red Bank	
Attn: Ch. Eng. Div., WLENG	1
CO, 4153rd Air Force Base, Cambridge	
Attn: ERCAJ-2	1
RDB	
Attn: Library	2
Attn: Navy Secretary	1
Science and Technology Project	
Attn: Mr. J. H. Heald	2

CONTENTS

Abstract	iv
Problem Status	iv
Authorization	iv
INTRODUCTION	1
PRELIMINARY CONSIDERATIONS	1
CIRCUIT DESCRIPTION	2
Shaping	5
Pulse Width Measurement	5
Pulse-Repetition-Frequency Measurement	11
Voltmeter Circuits	13
Manual Reset Feature	15
Automatic Reset Feature	17
Power Supplies	18
CONSTRUCTION	19
SUMMARY OF CHARACTERISTICS	19
RECOMMENDATIONS	20

ABSTRACT

The pulse analyzer AN/APA-64 is a device which, when used with a suitable search receiver, indicates on meters the pulse width and pulse-repetition frequency of received radar signals. It is designed for aircraft use and can be operated remotely. A special holding circuit with an automatic-reset feature allows readings to be logged from only a short burst of pulses. A complete circuit description of this equipment and a summary of its characteristics are included.

PROBLEM STATUS

This is an interim report on this problem; a final report on the over-all system is in preparation.

AUTHORIZATION

NRL Problem No. R06-18

AN/APA-64 PULSE ANALYZER

INTRODUCTION

A pulse analyzer was needed which could be operated in conjunction with a search receiver and which would indicate by meter presentation the video characteristics, pulse width, and pulse-repetition frequency of a wide variety of radars. In addition, it was desired that the instrument perform its intended functions from one sweep of "burst" of pulses from the particular radar under observation. Using as a reference the wartime work of C. C. Loomis and J. W. Christensen[1] of the Radio Research Laboratory, Harvard University, such a pulse analyzer giving satisfactory results was designed and developed at the Naval Research Laboratory.

PRELIMINARY CONSIDERATIONS

The main problem in such design is one of separating variables, that is, of separating pulse length, pulse-repetition frequency, and amplitude on the assumption that radar video characteristics are repetitive in nature. Since amplitude change is the least useful information, it was eliminated in this instance by means of a special pulse-shaping circuit that preserves pulse length and pulse-repetition frequency and eliminates amplitude variations. The network sensitive to pulse-repetition frequency is of straight-forward design; pulse-length-sensitive networks are generally more difficult to obtain since it is practically impossible to eliminate pulse frequency.

The video output of most search receivers is of the order of 1 to 3 volts. It varies with the receiver power supply and also with the signal strength as the receiver approaches or recedes from the radar under observation. Since a meter system would be sensitive to all these changes, it is necessary to eliminate amplitude variations so as to produce only a small percentage error from this factor. The pulse-repetition frequency coming through the system would remain unaffected, but pulse-length indications would be influenced by amplitude and shape changes. In consequence, it is necessary to amplify, and generate by shaping, an equivalent pulse for measurement purposes.

The effective range of a radar determines the number of pulses it must receive back from the target in a single sweep. Therefore a pulse analyzer must be capable of coming to equilibrium with the same number of pulses in order to present the pulse information accurately. In short, any analyzer must give the same indications of a single radar whether it is sweeping across or continuously tracking a target. From the standpoint of usability,

---

[1]Loomis C. C., "Radar Video Analyzer," Harvard University Radio Research Laboratory Report 411-220. August 1, 1945.

there must be no inherent transients generated in the analyzer greater than any transient that may occur in the radar signal during reception, and the analyzer must be reasonably insensitive to signal-amplitude changes.

The received energy sweep of a scanning radar, for instance, is very low since the modern radar antenna mounts will allow rapid motion and, with modern antennas, produce reasonably narrow beams. In addition, the radar energy duty cycle is low. As the radar beam scans past the receiving antenna, it is also noted that the signal-amplitude range is large due to the shape and sharpness of the radar antenna beam. On the assumption that the receiver gain is constant throughout a single sweep of the radar beam, the beam forms a pulse-amplitude pattern or envelope vs time. It is necessary that the design of the analyzer be such as to accept pulses whose amplitudes are well down the sides of the amplitude envelope as well as to accept pulses from the top, or flatter portion of the envelope. Incorporation of this feature provides the minimum number of pulses required to ascertain repeatable readings of the indicating meters without undue restrictions or serious limitations.

Meter presentation of pulse data must further function to hold each indication of pulse-width and pulse-repetition frequency long enough for the operator to note correctly with ease and confidence the information presented him.

CIRCUIT DESCRIPTION

The basic block diagram of the Radar Video Analyzer is shown in Figure 1. The signal input from the search receiver goes through a section that amplifies and shapes the pulse for measurement. Thereafter the pulse enters first a pulse-width network and then a voltmeter to indicate pulse width. In the same manner, the pulse goes into a pulse-repetition-frequency network and another voltmeter to indicate repetition frequency. Also, from the shaping section the pulse goes into an automatic-reset circuit which generates a trigger on the first pulse to reset each voltmeter, thereby making them ready to indicate any new information coming to them. Figure 2 is an over-all schematic diagram of the equipment.

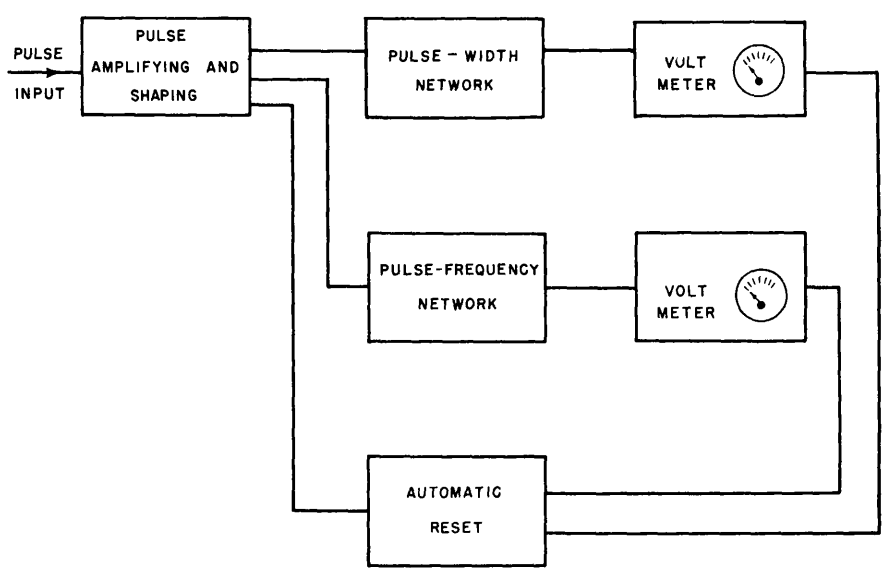

Fig. 1 - Basic block diagram of pulse analyzer

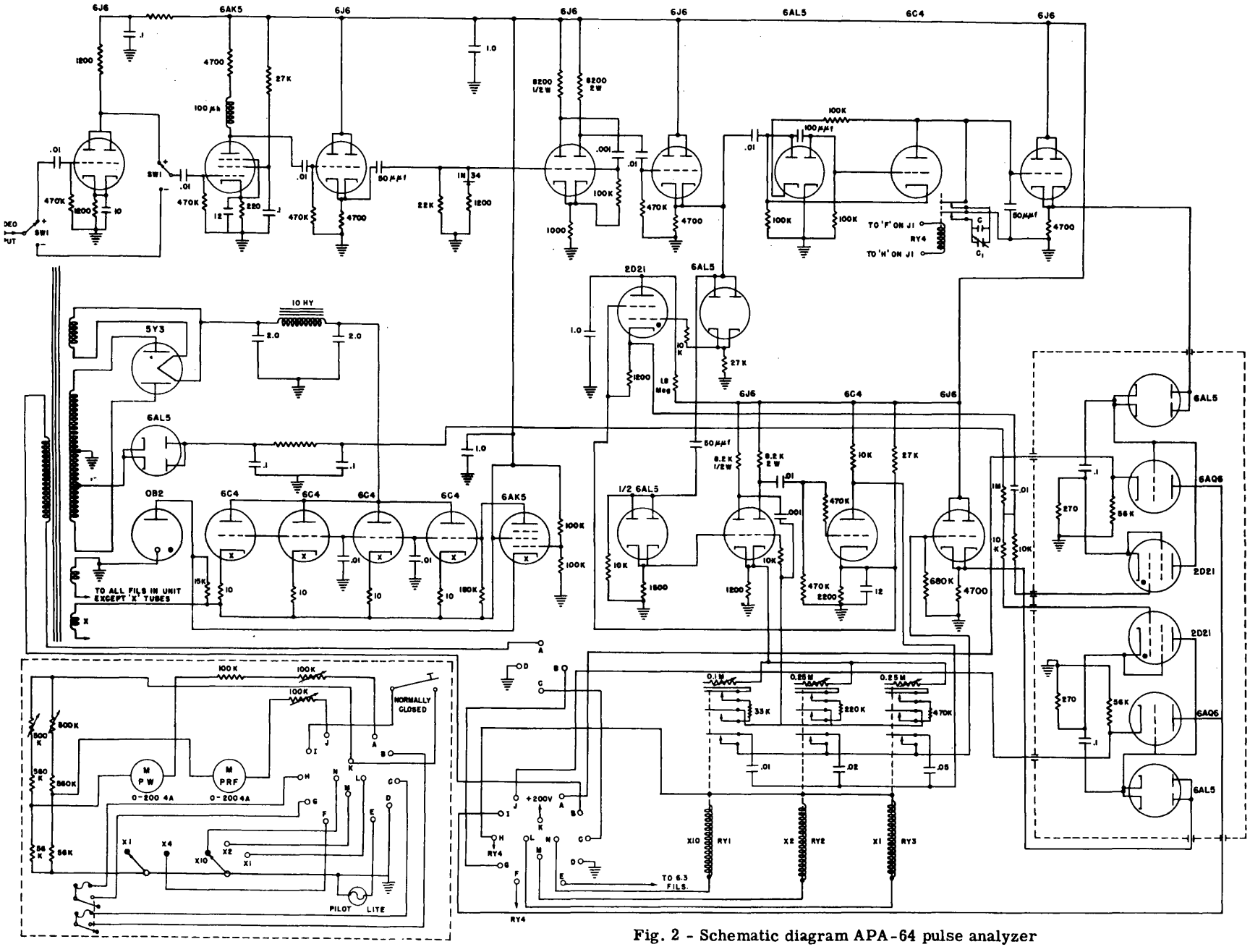

Fig. 2 - Schematic diagram APA-64 pulse analyzer

This page intentionally left blank.

Shaping

Amplification of the pulse signal is accomplished in two stages. Although it produces little or no gain advantage, the first stage is necessary in order to allow a positive or negative input polarity feature. A tube with high transconductance was chosen so as to enable the preservation of pulse shape. The second stage uses a high transconductance pentode amplifier with sufficient gain to operate the triggered shaping circuit. This two stage amplifier is followed by a cathode follower to reduce loading on the amplifier and to provide a low source impedance for operating the differentiator. This combined amplifier and cathode follower preserves the shape of the pulses over the output range of the usual search receiver.

The shaping multivibrator is a slave circuit which locks on to pulse-repetition frequency and produces an output pulse whose length is controlled by the triggers from the differentiator. The multivibrator is a single-shot type, that is, it must be triggered on and off. This is accomplished by biasing the first tube to cut off and allowing the second tube to conduct. The first tube of the multivibrator, as used in shaping, is triggered on by the positive trigger pip from the differentiator; the plate voltage drops due to plate current, and this drop is coupled to the grid of the second tube. This cuts off the second tube and allows its plate voltage to rise to supply-voltage level very quickly. When the first tube is cut off again by the negative differential pip, the resulting rise in its plate voltage is coupled to the grid of the second tube causing the latter to conduct. This causes the plate voltage of the second tube to drop again to normal level.

The output of the shaping multivibrator is fed to a cathode follower. The use of a follower enables considerable capacitive loading to be present without destroying materially the shape of the pulses. Figure 3 shows the schematic circuit of the amplifier and shaper. The first tube is the input stage, and from it pulse polarity may be selected. The second stage is a pentode pulse amplifier feeding a cathode follower. From the follower the pulses are fed into a special differentiator which triggers the shaping multivibrator, and the shaped pulses are fed to the subsequent circuits through a cathode follower.

Pulse Width Measurement

Pulse width is a difficult variable to measure. Since the repetition rate is so difficult to eliminate, it is accepted and its effects minimized by circuit design. For proper operation of the pulse-width section of the device, the pulse coming to it for measurement must have constant amplitude. This is already provided by the shaping circuits previously considered.

It is necessary in the shaping circuit to preserve the width property of the incoming pulses. If pulses were rectangular, the width could be measured between any two corresponding points along the sides of the pulse. For usual oscilloscope measurement, the width of a practical pulse is often taken to be the width measured at points 6 db down from peak. Pulses are not square even as output from a radar. As observed, they usually have a sharp leading edge with rapid rise time and a more gradual trailing edge with slower fall time. Regardless of the shape of the pulse coming from a radar, it does not look the same after it has traveled through a search receiver. Even further distortion of the shape of the pulse occurs when the receiver is detuned somewhat to separate signals that may be nearly on the same radio frequency. A search receiver may also have reasonably narrow-band i-f amplifiers, and with the practice of detuning for signal separation the channels become in effect even more narrow. By the time the pulse has traveled through a narrow-band i-f and through the video amplifier it has been widened so that it is difficult to define

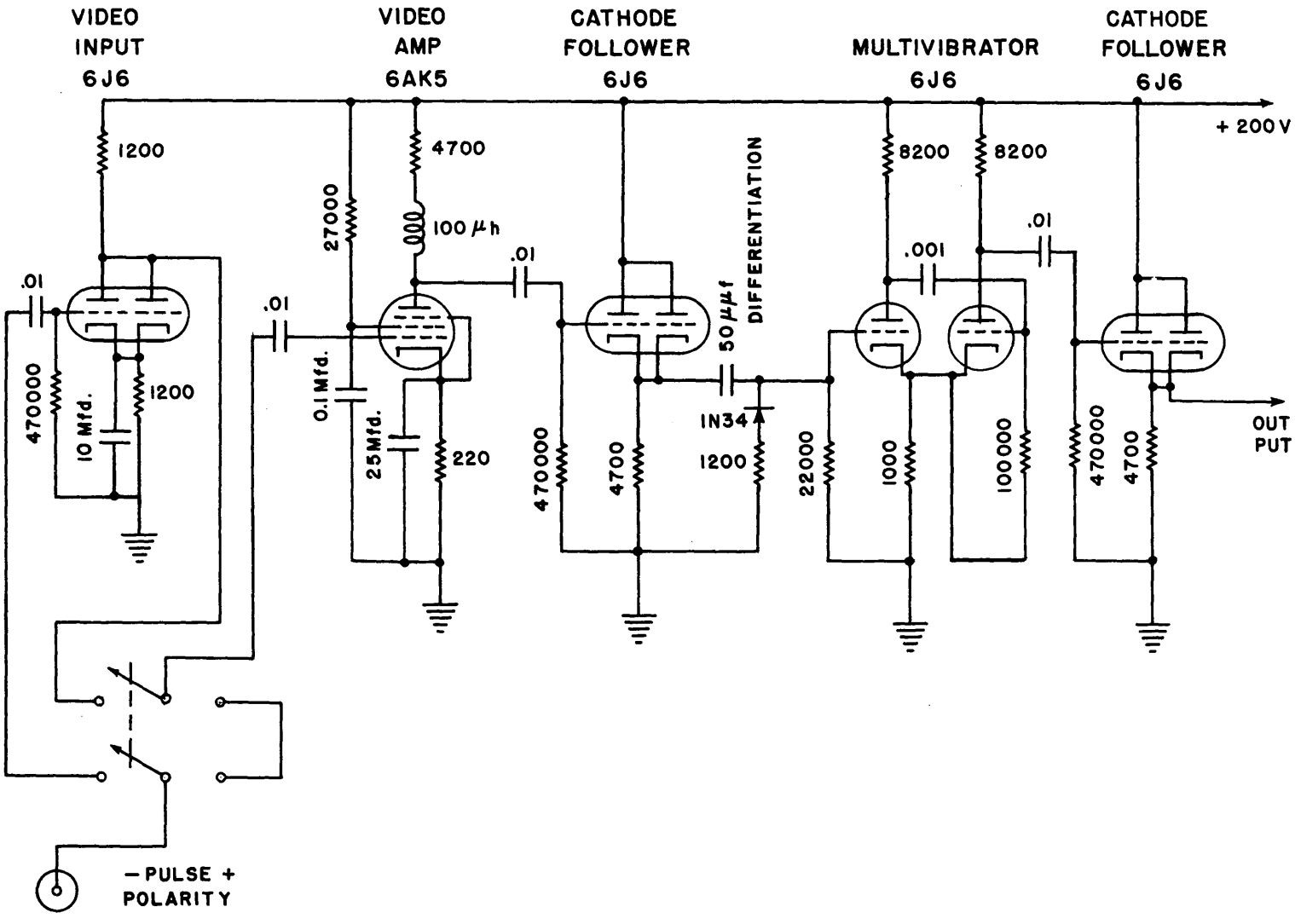

Fig. 3 - Schematic diagram, pulse amplifier and shaper

the actual width relative to the initial pulse. This distortion is greatest and most noticeable with short pulses.

A circuit designed to operate at the 6-db points would be of doubtful value. Since repeatability of readings is desired, this circuit would have increasingly less value as the amplitude range of operation increased. Under these circumstances, a circuit designed to measure pulse width at any fixed level would be of little use.

The points of most rapid rise and fall in a pulse do not change their relative time positions when capacitance-loading and narrowness of band pass are increased within limits. This is particularly true where pulse shape is determined by capacitive loading somewhere in the i-f or video amplifier. The measurement of the time interval between the points of most rapid rise and fall is repeatable on successive attempts.

At the points of most rapid rise and fall the slope of the pulse is greatest. Trigger pips for operating the pulse-width circuits are easily obtained by differentiating the pulse. Since the time lengths being measured are of the order of microseconds, the trigger pips themselves would have to be made very short compared to the pulse length being measured. However, the triggering properties of the differentiated pulse have compensating errors which make changes in amplitude a second order effect for pulse-width indication.

Figure 4 illustrates the differential pips of a square pulse, assuming the triggered circuit is "flipped" on and "flopped" off at the same corresponding positive and negative voltage. As the amplitude of the square pulse increases, the amplitude of the differential pips increases. In so doing the trigger points move forward along the time axis, although the relative time between triggering points changes very slightly if at all.

In the present design these pips are used to trigger a blocked, or one-shot multivibrator to introduce, for measurement purposes, a large and constant-amplitude pulse whose

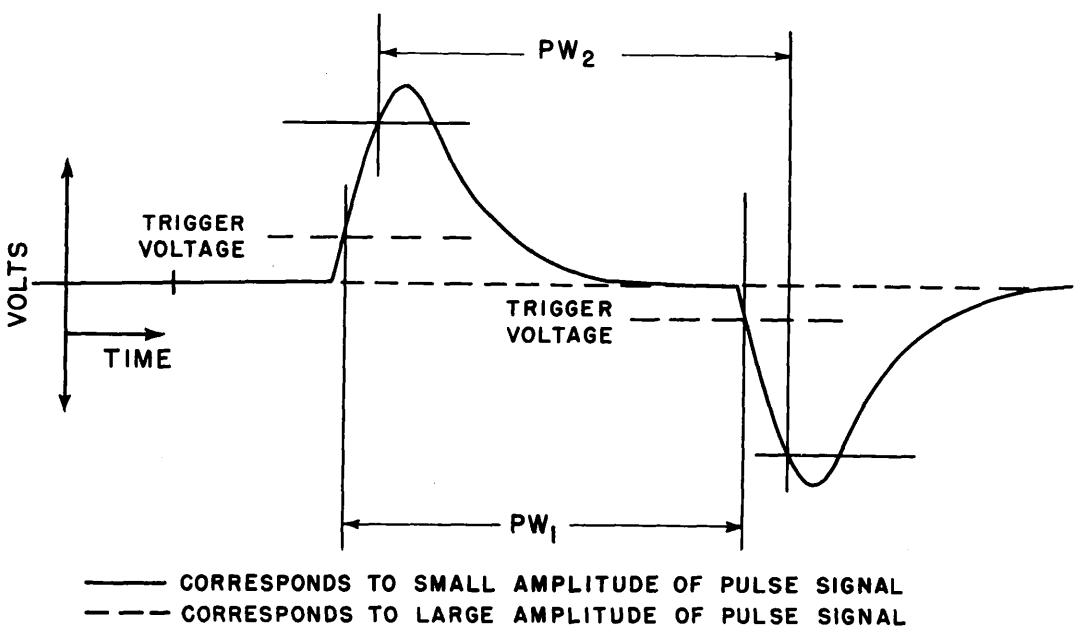

Fig. 4 - Differentiated square pulse

length in time is controlled by these pips. In using a trigger to operate a "flip-flop" circuit of this type, however, it is found that the voltage required to "flip" it on is less than the voltage to "flop" it off. Since it is thus possible to trigger on the "flip-flop" and not be able to trigger it off again, the differentiator circuit must be designed to overcome this objection. This is accomplished by providing a shorter time constant for the positive than for the negative

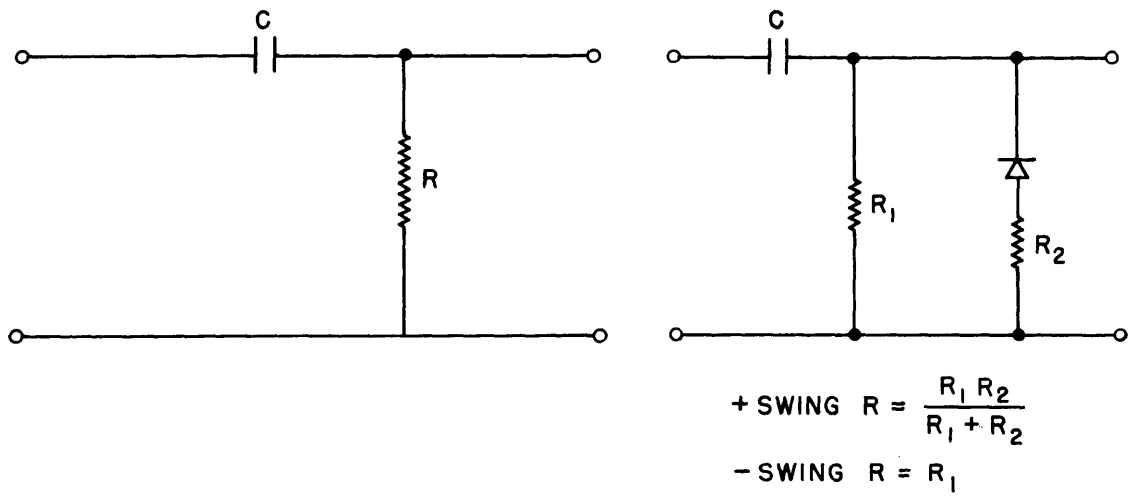

Fig. 5 - Conventional differentiator and modified differentiator circuits

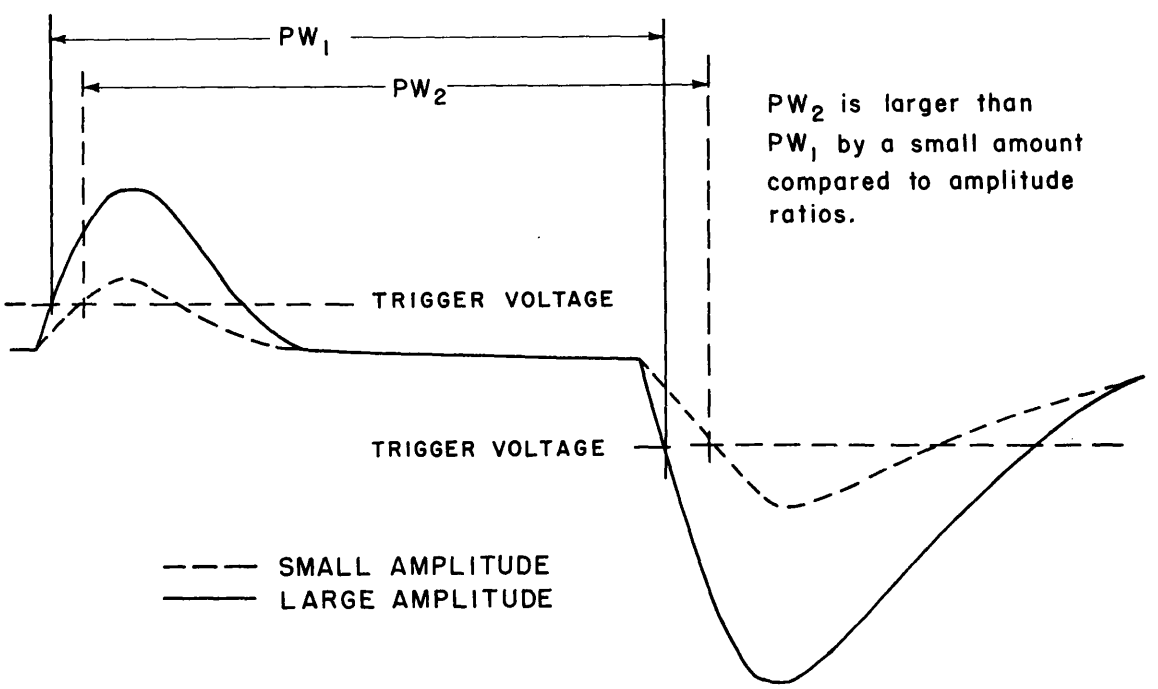

Fig. 6 - Differentiated square pulse from modified differentiator circuit

trigger pip. Figure 5 shows the conventional differentiating circuit and the modification to accomplish the desired time constants. By paralleling the resistance branch with a crystal diode and a series resistor, this arrangement automatically switches another resistor in parallel for one polarity which does not appear in the circuit to the other polarity.

With this type of differentiator, circuit symmetry is destroyed and a second order error is introduced because time spacing between triggering levels will increase with amplitude. Figure 6 shows how this error occurs and its variation with amplitude, but this slight disadvantage is not objectionable since the trigger circuit will always operate properly or not at all, thus adding greatly to the dependablility of the instrument.

The pulse-width-measuring circuit operates in the following manner. The pulses from the shaping section are fed into a pulse-width-sensitive network, which is an R-C combination where the capacitor is charged through the resistance. The voltage to which the condenser is charged is a function of time and the R-C product of the network. To change range of operation or change scales it is only necessary to switch in different values of R or C. As shown in detail in a subsequent section, the voltage due to charge on the capacitor is measured by a peak voltmeter calibrated in microseconds.

The simple R-C network is frequency-sensitive and will give the correct information only when one pulse is applied. It is clearly seen that after each pulse the stored charge must be removed in order to produce the correct information from several pulses and eliminate the effects of frequency. Voltage due to charge on the condenser must be measured at peak value.

The problem presented to the peak voltmeter by a wave shape like that shown in Figure 7 is a difficult one. It can be seen that the energy in the output wave is very low, and consequently a large number of pulses would be required to charge the peak voltmeter to peak value. Tactically, this would be an undesirable situation since only a large number of pulses would enable the indicating meter to give the correct indication. The loss of time in receiving the necessary number of pulses is very undesirable, and therefore means have been employed to increase or amplify the energy level of the wave to operate the peak voltmeters.

The energy amplifier actually is a pulse widener, and the operation of this section is illustrated in Figure 8 with accompanying waveforms. Initially, the circuit is at rest and points (A), (B), (C), and (C′) are at ground potential. A pulse is impressed, and point (A) rises immediately above ground along the leading edge of the pulse. The cathode of the triode V_3 also rises in the same manner since it is directly connected to point (A). This rise of cathode voltage cuts off V_3. Point (B) shows a very small rise since the diode V_2 is conducting; however, C_1 is charged to a voltage nearly equal to the voltage of the incoming pulse. During the time that the incoming pulse keeps point (A) above ground, C_2 is charged through the diode V_1 and resistance R_3. Since this is the network of the pulse-width-sensitive circuit, at the charge on C_2 is a function of time along the straightest portion of an R-C time curve. When the trailing edge of the pulse comes along, points (A) and (C) return to ground, and V_1 no longer conducts. Simultaneously, point (B) is forced negatively by the amount of charge voltage on C_1. This keeps V_3 cut off so that the charge is left on C_2. But the charge on C_1 gradually leaks off through R_1 and R_2, and the potential on point (B) returns to ground at a fixed time due to the time constant of R_2, R_1, and C_1. As this happens, the bias on V_3 vanishes, and the tube comes into conduction removing the charge left on C_2. C_2 then discharges through V_3 and R_1. Point (C) then is at ground potential again and the whole circuit is at rest ready for the next pulse.

If a pulse of rectangular shape, amplitude E, and width W is impressed upon a pure resistance, the current is E/R and the peak power is E^2/R. If this peak power is multiplied

by the time duration of the pulse, a quantity is obtained which has the dimensions of energy and which is a measure of the apparent "energy" in the pulse. Caution must be exercised, when using the term "energy" in connection with a video pulse because in certain nonlinear video circuits the energy is not readily available. This is particularly true in the pulse-widener

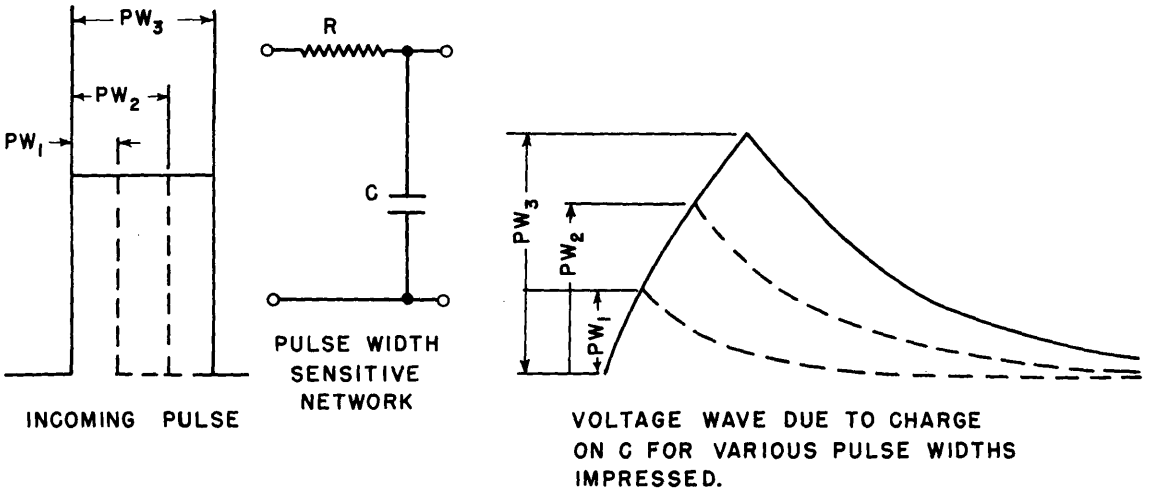

Fig. 7 - Integration of a square pulse

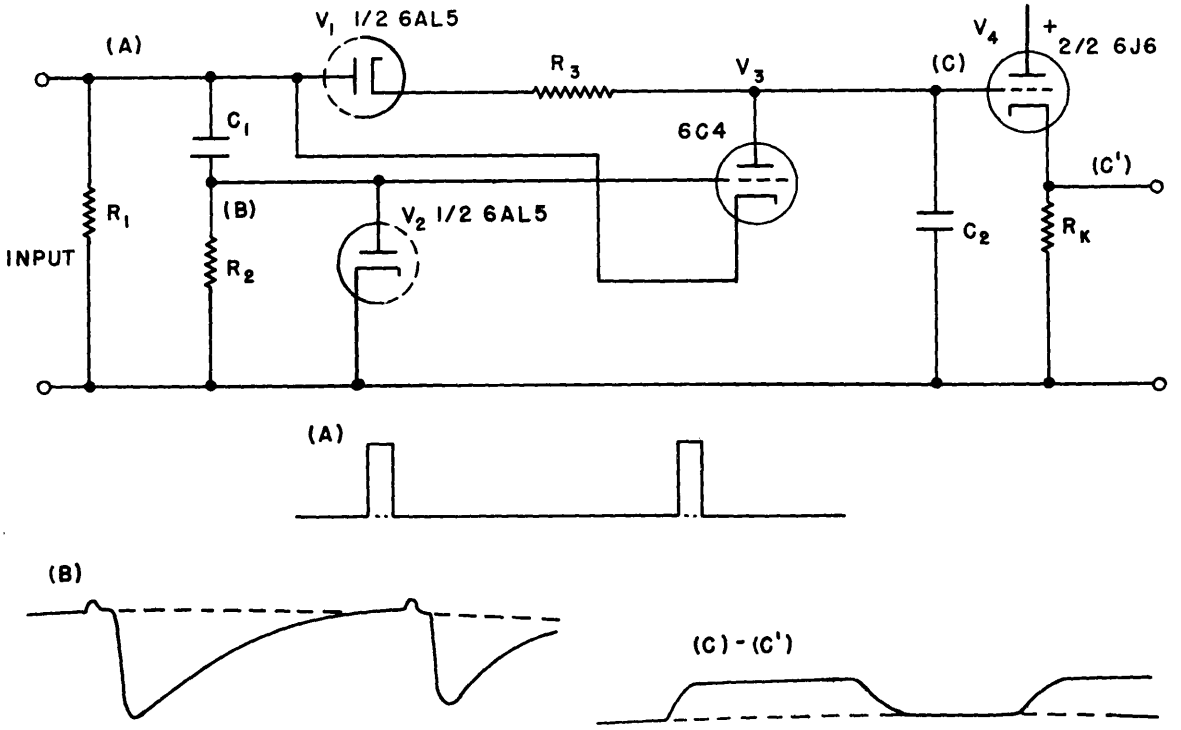

Fig. 8 - Pulse width network and energy amplifier with waveforms at important points

circuit illustrated in Figure 8. The wave shape at point (c) is the same as at point (c'), but the actual energy available is quite different. At point (c), current has been sacrificed in order to maintain voltage due to charge on condenser C_2. Actually, the output cathode follower tube is the element in the circuit that accomplishes energy amplification, in the sense that the tube supplies the energy to operate or charge the meter circuit. The amount of energy is determined by the wave shape.

Pulse-Repetition-Frequency Measurement

The measurement of pulse-repetition frequency necessitates elimination of undesirable parameters and preservation of the desirable one. Perhaps the simplest method in this case is to use a blocked or "one-shot" multivibrator which generates a pulse of constant amplitude equal to the difference between supply voltage and plate voltage at saturation. The length of this pulse is determined entirely by the time constant of the grid circuit of the conducting tube and can be switched to change the indicator range. The multivibrator is triggered by a trigger signal from the incoming pulse. Amplitude and pulse length are eliminated, while frequency is preserved.

The pulse length of the output pulse from the multivibrator must be such that the multivibrator operates properly at a frequency at least slightly more than twice the indicator scale setting. This will guarantee that, for any frequency above maximum scale reading, the meter will always indicate off-scale. The meter will still indicate off-scale at the frequency at which the multivibrator will "divide". For example, suppose the full scale "setting" is 500 PRF and signal of 1100 PRF is coming through. The multivibrator has begun to "divide" giving 550 pulse to the averaging circuit. But suppose further that the averaging-circuit limit is 500 PRF. The meter then indicates off scale.

The pulse output of the multivibrator is positive, but in order to operate the averaging circuit with the peak voltmeter, the pulses must be inverted. This is accomplished by a limiting-triode amplifier whose output amplitude is constant over the entire frequency range. With negative pulses applied to the averaging circuit, the positive peak amplitude from the averaging circuit will be proportional to the frequency. The positive peaks are applied to the peak voltmeter through a cathode follower.

It is necessary to cover pulse-repetition-frequency in three ranges. This necessitates switching the capacitive element of the averaging circuit simultaneously with switching of the multivibrator pulse output. The grid return resistor in the conducting tube of the multivibrator is switched to enable changing the pulse length output. A relay placed near the relative circuits accomplishes the switching and is operated remotely from the control panel.

The averaging circuit is a high impedance circuit and therefore must be used with a cathode follower, which later is an impedance transforming device capable of providing suitable driving current for the voltmeters. Figure 9A illustrates the basic averaging circuit.

Refering to Figure 9B the capacitor C does not conduct direct current. Therefore

$$\frac{1}{f} = a + b$$

and the pulses at the output will assume an average d-c level. Then

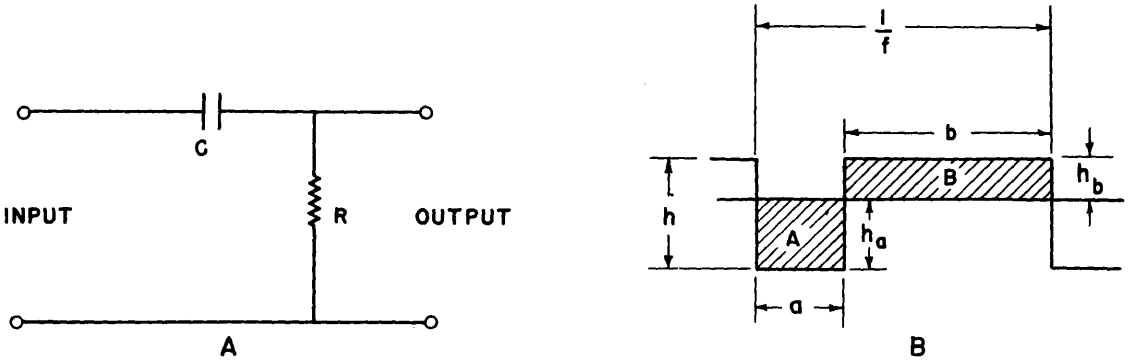

Fig. 9 - Averaging circuit and waveform diagram

$$A = B$$

$$\frac{1}{f} = a + b$$

$$= a + \frac{B}{h_b}$$

$$= a + \frac{A}{h_b}$$

$$\frac{1}{f} = a + \frac{a \times h_a}{h_b} = \frac{a(h_b + h_a)}{h_b}$$

$$\frac{1}{f} = \frac{a + h}{h_b}$$

$$\frac{1}{f} = \frac{h_b}{a \times h}$$

Where a is a constant determined by the pulse length output of the multivibrator and h is a constant determined by the amplitude of the output of the limiting amplifier. Thus $f = Kh_b$ so that the frequency is proportional to the positive peak voltage level of the pulses. Hence, the voltage applied to the peak voltmeter is proportional to frequency.

The time required for the circuit to come to equilibrium after the pulses are introduced is a function of the time constant of R and C. If the time constant (product of R and C) is very large, the averaging circuit produces very good square waves but reaches equilibrium too slowly. Hence, in terms of normal bursts of pulses presented to the averaging circuit, several bursts would be required to obtain an accurate reading of repetition frequency. On the other hand, if the time constant of R and C is too short, the averaging circuit will differentiate the pulses, thereby making the frequency have a second order effect on the meter indications.

One other consideration effects the time constant compromise. The wave shape of the compromise averaging circuit will no longer be square but will have a slight though noticeable decay. As examined from the point of view of charging the peak voltmeter capacitor, it is seen that the available time for charging becomes shorter as the voltmeter capacitor

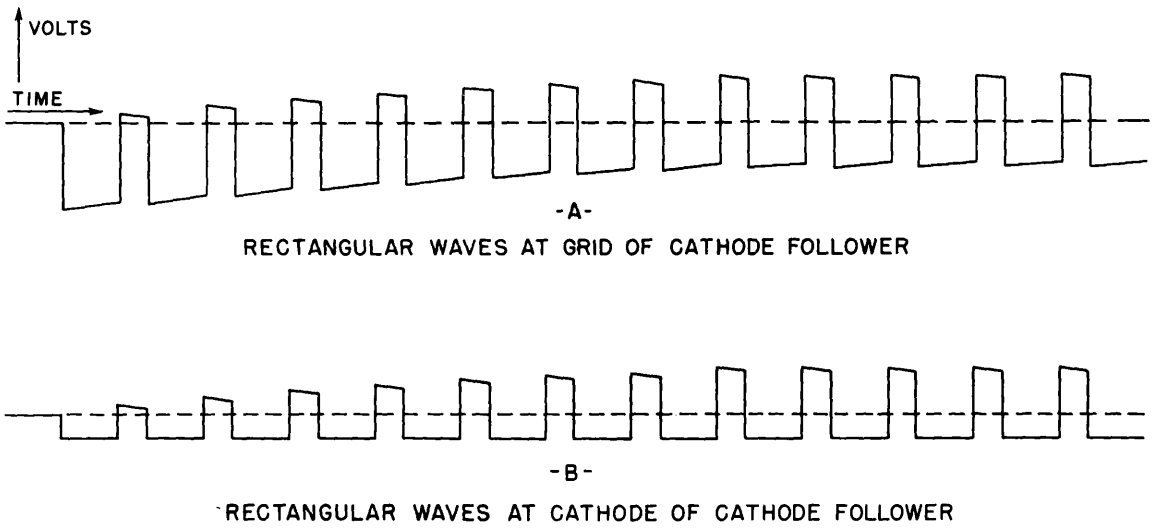

Fig. 10 - Transient response of averaging circuit

approaches full charge; that is to say, the trailing edge of the pulse is lower in voltage amplitude than the voltage due to the charge in the voltmeter.

Since the voltmeter requires a positive going voltage, a cathode follower is used in the output of the averaging circuit. Since it serves as an impedance transforming device between the averaging circuit and the voltmeter, the cathode follower provides a low-impedance driving source for the voltmeter.

Figure 10 A shows the transient response of the averaging circuit as the voltage is applied to the cathode follower, while Figure 10B shows the voltage output of the cathode follower and the manner in which the negative peak voltage is clipped. The cathode follower is cut-off as the pulse voltage swings negatively, and at this cut-off point the instantaneous voltage of the cathode reaches zero. The cathode cannot go more negative but does follow the positive swing of the pulse voltage.

Fortunately, the cathode follower is able to drive the voltmeter to full charge more rapidly than the averaging circuit is able to reach equilibrium. Thus, the averaging circuit is the limiting factor for rapid operation of the pulse-repetition-frequency measurement.

Figure 11 is a diagram of the pulse-repetition-frequency section with important wave forms.

Voltmeter Circuits

Each measuring section of the pulse analyzer requires a vacuum tube voltmeter to present the measured information so as to be easily and accurately observed. One meter presents pulse-repetition frequency and the other presents pulse length. Since the analyzer is to operate from a short burst of pulses as received from a sweeping radar, the voltmeter

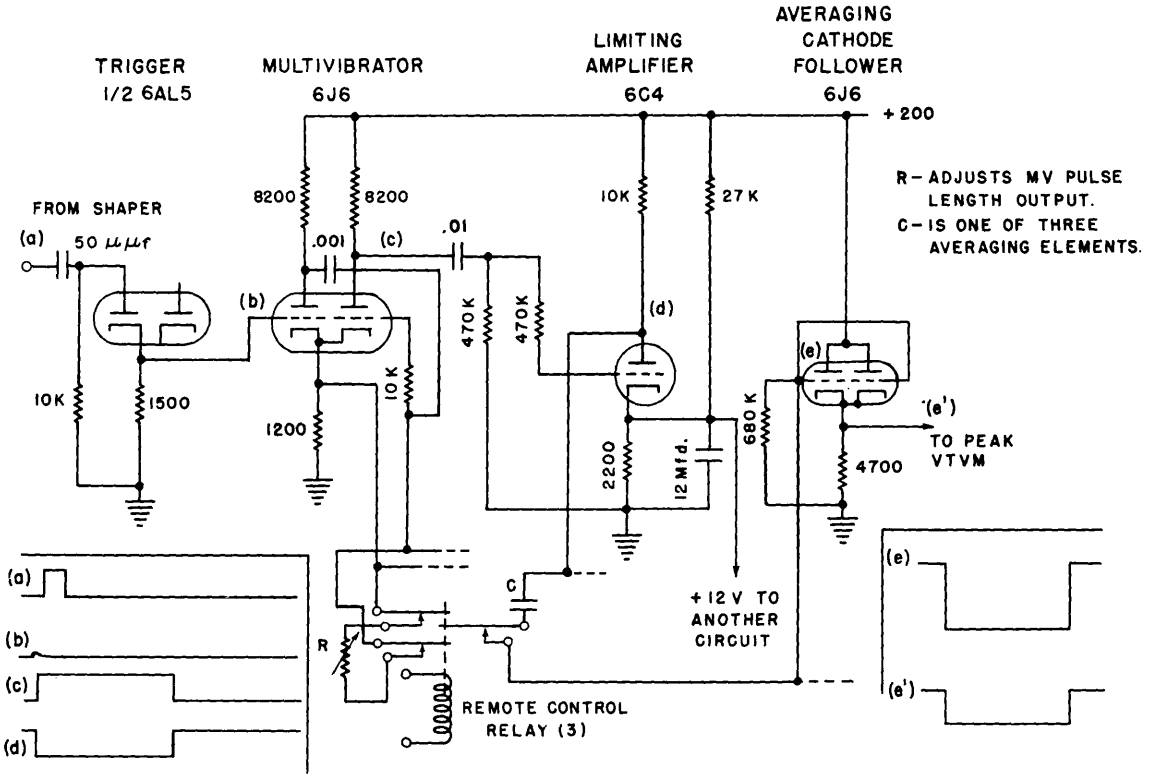

Fig. 11 - Schematic diagram, pulse repetition frequency section

must hold the proper indication long enough for the operator to log this information. The metering circuit must be independent of frequency. Further, the metering circuit must be such that, after the information is obtained, the meters can be reset at will. Also, the meters must reset automatically for each new set of pulses.

A long-time, constant-storage circuit enables the indicator to hold its reading after the signal has passed, and the leakage resistance is made as large as possible so that the loss of charge on the storage capacitor is small over the period required for the operator to obtain the information.

The capacitor or storage circuit is charged through a diode switching tube, and the voltage on the capacitor due to the charge is applied to the grid of a vacuum tube in a voltmeter bridge circuit. The main sources of leakage resistance are between cathode and filament on the diode and in the grid circuit of the voltmeter tube. Both the cathode and filament of the switching diode may act like emitters, and the element with the highest potential will act like an anode. For example, if the cathode is elevated to a potential relatively higher than the filament, it is seen that the cathode becomes an anode with respect to the filament, and current will flow which will slowly discharge the storage capacitor. The opposite effect is produced by ionization in the voltmeter triode due to high plate voltage. These two effects tend to cancel each other, but some improvement may be effected by grounding the filaments and reducing their temperature.

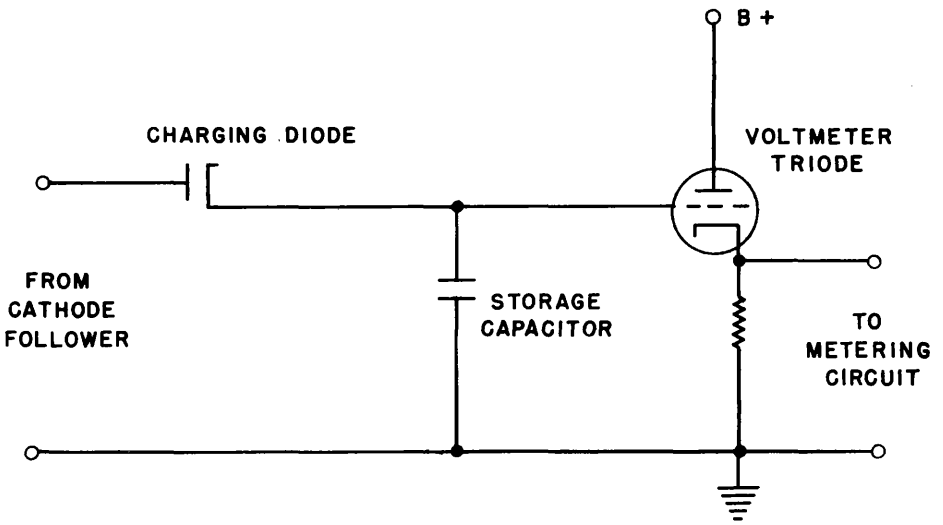

Fig. 12 - Basic voltmeter circuit

Reducing the temperature in the diode will increase the resistance of the tube, and this increase is undesirable since it will increase the resistance of the charging circuit. However, as the filament temperature is reduced, the emission drops faster at first than the plate resistance increases. Hence, an optimum filament temperature can be found, and such has been determined experimentally. Reducing the filament temperature of the reduced ionization within the triode. A good equilibrium can be reached in the circuit between the diode and the triode by adjusting the filament temperatures and plate voltage. Finally, factory variations in some cases make it necessary to select individual tubes for service in the voltmeter.

Figure 12 shows the basic vacuum tube circuits in the voltmeter, which is a peak reading device since the holding circuit is charged to peak value of the waveform presented. Hence, the voltmeter is independent of frequency, and is capable of being rapidly charged to peak value of the presented waveform. Since the waveforms are made to have high energy content, the voltmeter will require only a few cycles. For example, the waveform from the pulse-length section is capable of charging the voltmeter to equilibrium in two to three cycles. The waveform from the pulse-repetition-rate section however, rises to equilibrium relatively slowly. In this case the voltmeter follows the transient rise in peak value, but actually the voltmeter is capable of rising much more rapidly. Accordingly, the voltmeters do not contribute to the limitations on speed of operation of the analyzer.

Manual Reset Feature

It is obvious that some means are required for resetting the voltmeter to zero prior to successive indications. This is accomplished by removing the charge from the storage condenser very quickly and at all other times maintaining the high leakage resistance in this circuit. A 2D21 shielded thyratron connected across the condenser serves as a

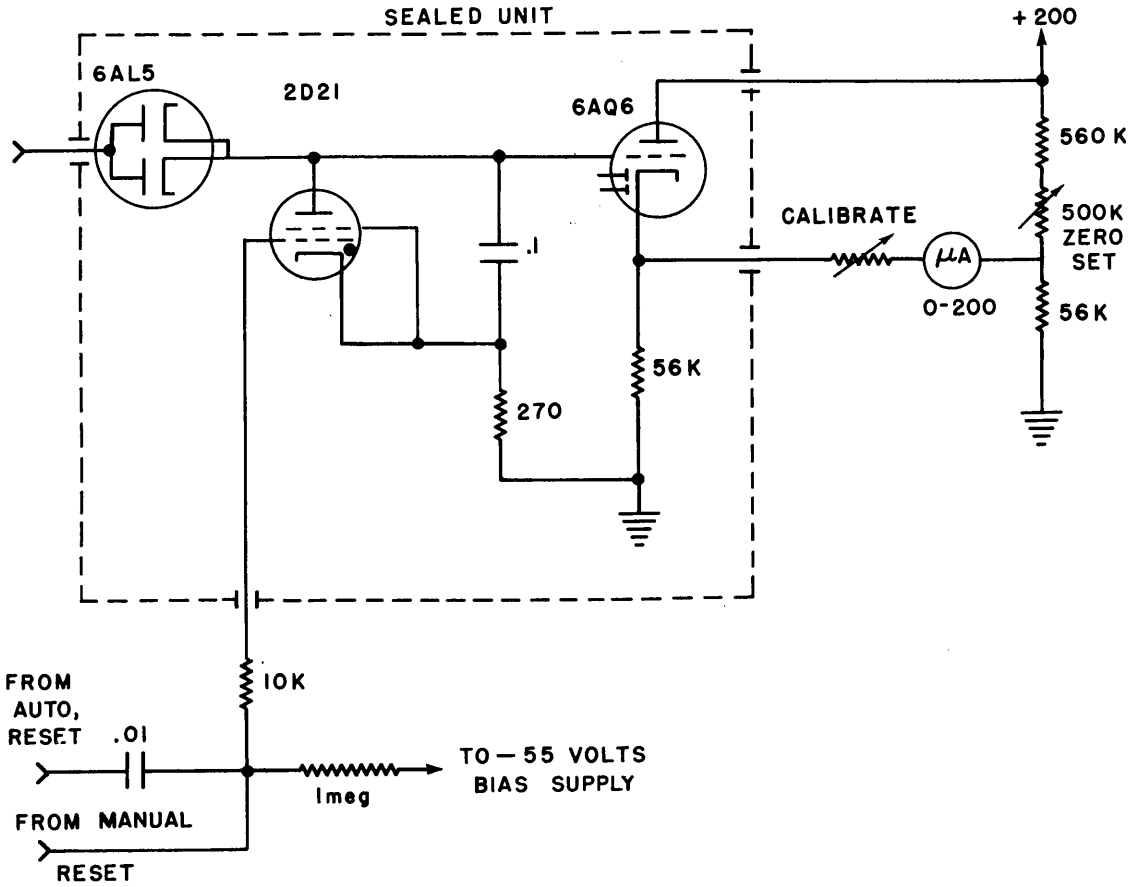

Fig. 13 - Complete voltmeter circuit

suitable switch. The plate of the thyratron is connected to the positive side of the condenser and the cathode to the negative or ground side. A negative bias sufficient to maintain cut-off of the thyratron is established at the grid through a suitable network to allow pulsing the grid. Suppose the plate of the tube is at a positive potential due to a charge on the condenser, and further suppose that a sharp pulse of sufficient amplitude to over-come the bias on the thyratron appears at the grid. Under such circumstances the thyratron will fire and discharge the condenser and then extinguish. This process resets the voltmeter and makes it ready for another indication.

Each voltmeter consists of a vacuum tube voltmeter bridge the reset thyratron, and a switching diode. The charging diode, voltmeter triode, the reset thyratron, and the storage capacitor are contained in a sealed unit to assure the maintainance of the high impedance circuit. All of the remaining associated circuits are located outside the sealed unit, and in the control box. The circuits directly appertaining to the vacuum tube portions are located near the sealed unit, while the indicators and adjustments are located in the remote control unit. Figure 13 shows the complete voltmeter circuit.

Manual reset is accomplished by momentarily removing the plate voltage from the voltmeter tubes. This enables the grids to serve as diode plates which discharge the storage capacitor.

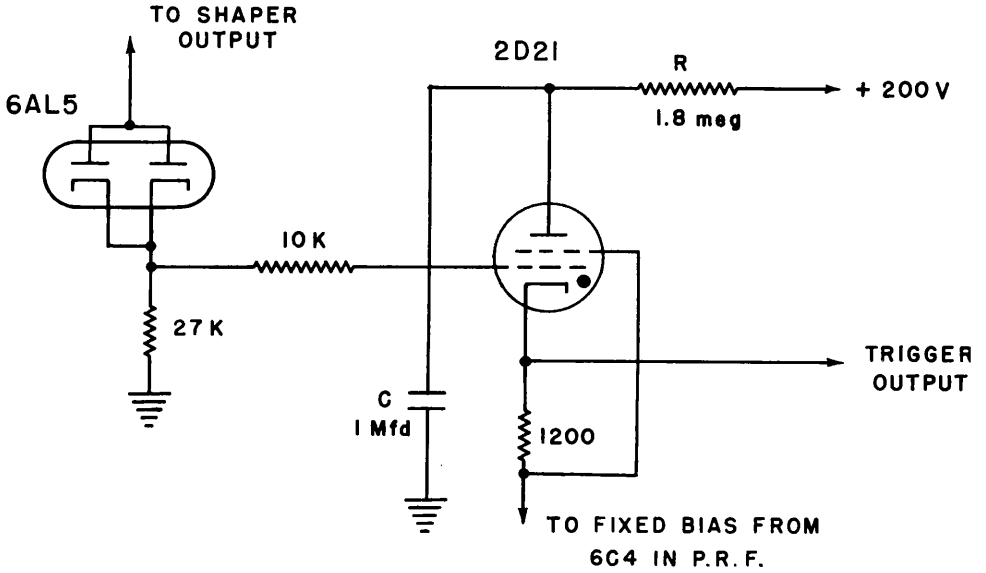

Fig. 14 - Automatic reset trigger circuit

Automatic Reset Feature

It has been pointed out that the indicating circuits must be reset before each indication. To relieve the operator of the burden of manual reset, an automatic reset has been provided to function when the first pulse of a "signal burst" comes into the analyzer. After the signal is gone the reading is left on the indicators. The operator may reset at will with his manual control, or he can allow the unit to operate automatically.

The automatic reset Figure 14 is a trigger generator that operates on the first pulse of a series of pulses, and this trigger is applied to the grids of the reset thyratrons in the voltmeters. A condenser that is charged to plate supply voltage through a resistor is the plate supply for the trigger generator, which is a shielded type 2D21 thyratron. The plate of the thyratron is connected to the positive side of the condenser, while the cathode is returned to a fixed positive bias through a small resistor. This bias is sufficiently large to maintain the thyratron at cutoff, but the pulses from the pulse shaper are of such amplitude as to overcome this bias and fire the tube. As the tube is fired by the first pulse, most of the voltage in the condenser appears at the cathode of the thyratron and is coupled to the reset tubes in the voltmeter. This voltage is large enough to overcome the bias on the voltmeter reset thyratron grids.

While pulses are present at the grid of the thyratron the plate supply capacitor is kept discharged, but when the pulses disappear the condenser will be allowed to charge. The cathode wave form of voltage rises sharply, and voltage of similar wave form appears at the grid. This grid voltage is produced by ion conduction as all the elements in the tube are at about the same potential during gaseous conduction. A diode in series with the thyratron grid prevents this voltage wave from entering the sensitive circuits, at the same time allowing the pulses to reach the thyratron grid.

The condenser and resistor have been arbitrarily set at 1 microfarad and 1.8 megohm respectively. If a shorter recovery time is desirable, R would be reduced, or, conversely,

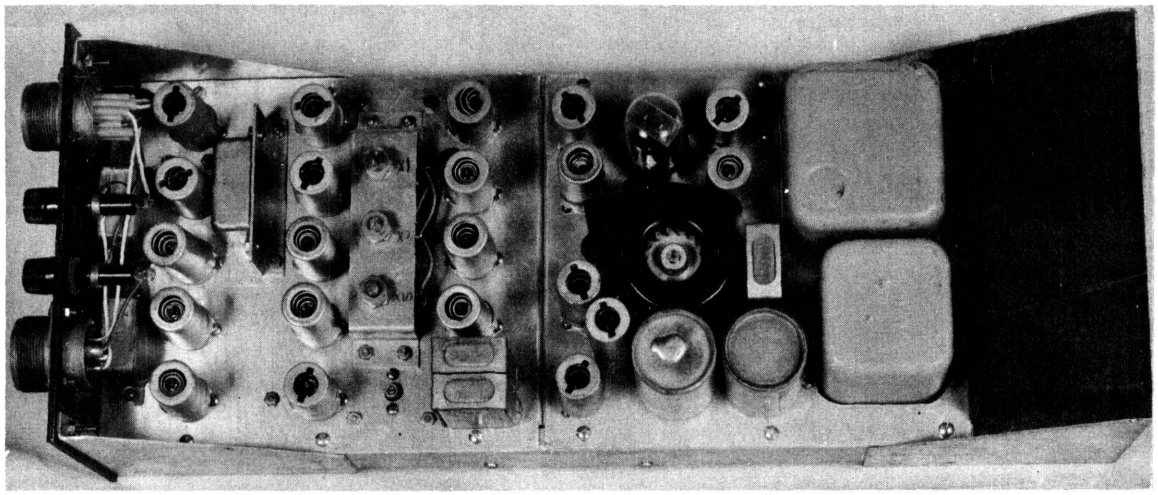

Fig. 15 - Top view of analyzer

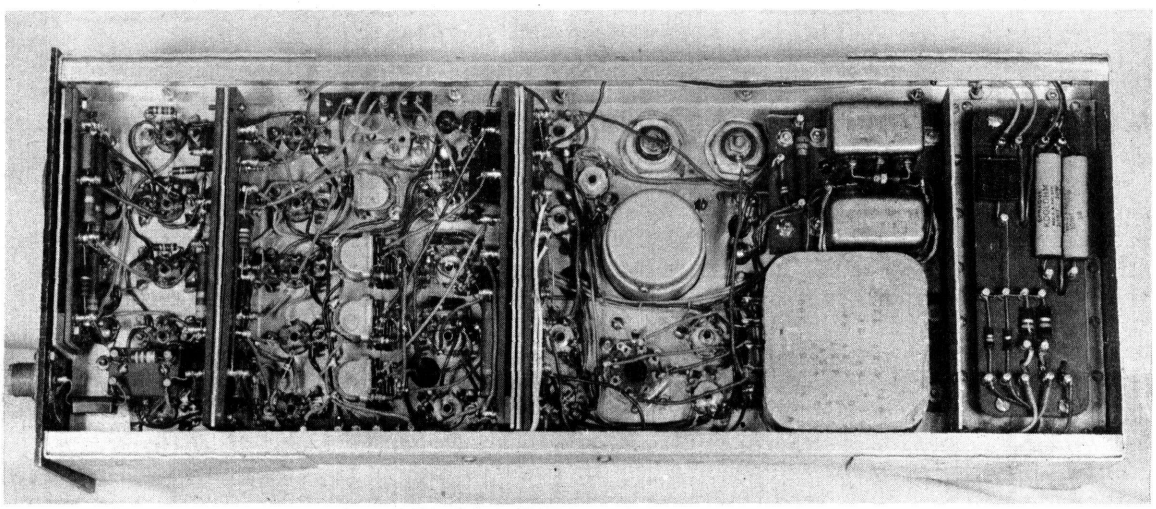

Fig. 16 - Bottom view of analyzer

for a larger recovery time R would be increased. Figure 14 shows the automatic reset trigger circuit.

Power Supplies

The power requirements for the pulse analyzer are rigid. Since the unit is a measuring device, care is taken to provide a regulated source of plate voltage, in this case by using the conventional electronic regulator circuit and adapting it to meet the needs of the pulse analyzer. A negative bias supply provides the necessary bias for the reset tubes in the voltmeters, and all the necessary filament voltages are available from the main power supply. These supplies operate from a primary source varying from 85 to 115 volts and from 400 to 1600 cps. An alternating current fan operating from this supply voltage is used because no filtering is necessary. In addition a 28-volt d-c source is required to supply power to operate the control relays.

CONSTRUCTION

The analyzer is constructed in two separate units, one containing the power supplies and all video circuits and the other the remote controls and presentation meters. While presentation unit is assembled behind a standard aircraft console panel, the video unit is constructed in an A-1-D aircraft rack with only fuses and connectors appearing on the front panel. Connected to its associated equipment by cables, the video unit can be located anywhere in the aircraft.

The internal construction of the video section is shown in Figure 15. The rack is so constructed that the plane of the decks is vertical. This is done to allow a larger base area which facilitates construction and service of the unit.

As shown in Figure 16, the section directly behind the panel contains all the video circuits, and is installed and cabled into the rack from terminals underneath the deck and on both sides.

The second section contains the power supplies and the blower and is constructed and installed in the rack in the same manner as the video unit.

The last section contains the peak voltmeters. The high impedance storage circuits and the tubes are placed in a sealed unit to prevent dust and moisture from reaching these circuits and impeding their proper operation. The connections to the circuits within the sealed section are made through transformer lugs which are hermetically sealed. A terminal board is attached to the outside of this section at the bottom, and on this board are placed the elements of the voltmeter circuit that may be outside. This entire voltmeter section is installed in the same manner as the other sections.

The presentation panel contains two meters, one for pulse length calibrated in microseconds and the other for repetition frequency calibrated as PRF cycles. Associated with these meters are range-changing switches and associated screwdriver adjustments. Also on this panel are the power switch, pilot light, and the manual reset switch. The whole assembly is encased with a cable connector on the back of the case. All functional controls for the analyzer are on this panel assembly. Figure 17 shows this presentation panel and calibrations.

SUMMARY OF CHARACTERISTICS

The ranges of operation of the pulse analyzer are:

PULSE-WIDTH MICROSECONDS	PRF, cps	INPUT, VOLTS
0.5 - 5.0	50 - 500	pos: 0.8 - 2.5
2.0 - 20	100 - 1000	neg: 1.0 - 2.5
	500 - 5000	

The power requirements of the analyzer are:

ALTERNATING CURRENT			DIRECT CURRENT	
VOLTAGE	POWER	FREQUENCY	VOLTAGE	POWER
85 - 115	150 W	400 - 1600	28	8 W

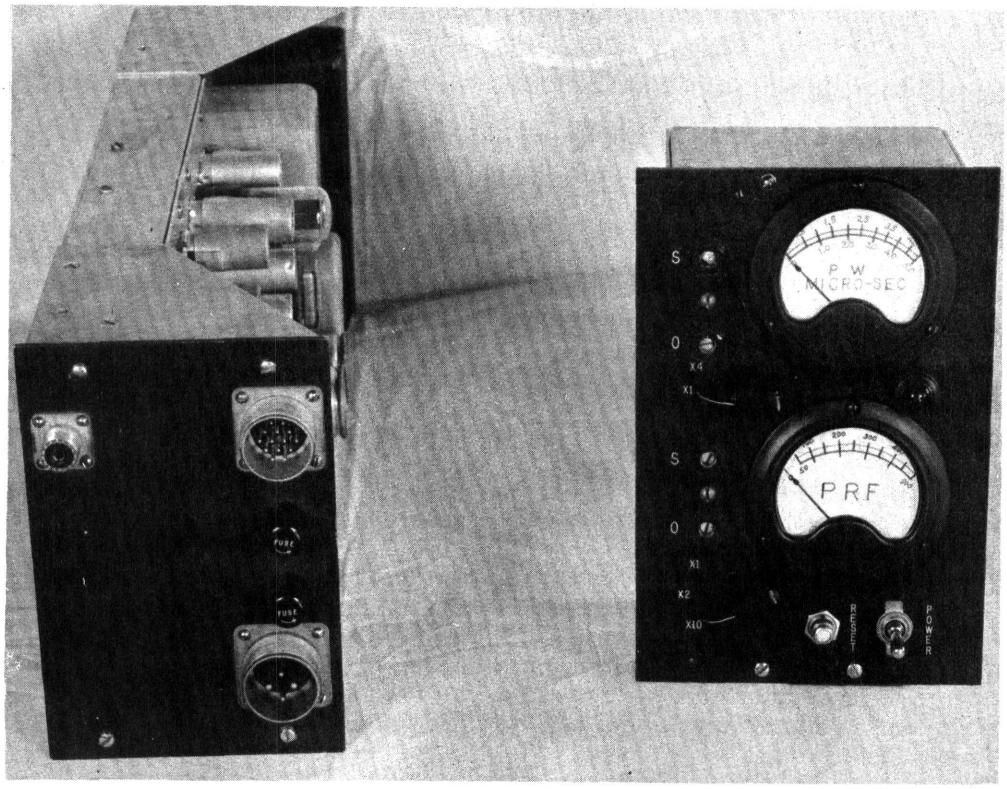

Fig. 17 - Front view of analyzer and control unit

Designation, Size, and Weights:

UNIT		SIZE	WEIGHT (Approx.)
ID-228/APA-64	(Control/Display)	Standard Console Panel	4
RF-38/APA-64	(Analyzer)	A-1-D 4-7/8″ W 7½″ H 19-3/4″ D	30

RECOMMENDATIONS

At the time the pulse analyzer was developed, the best available tubes, components, and techniques consistent with good engineering practice were used in the circuit design. Since that time however, new tube types and new components have become available, some of which would fit very well into the further development of the pulse analyzer.

* * *

PRNC-9412-2-16-49-125